Edited by Foxit PDF Editor
Copyright (c) by Foxit Software Company, 2004
For Evaluation Only.

TRIUMPH

TT600

Speed Four

THIS MANUAL IS FREE!!!!
IF YOU HAVE PAID FOR THIS,
THEN YOU HAVE BEEN RIPPED OFF,
GET YOUR MONEY BACK

SERVICE MANUAL

INSPEKTIONSHANDBUCH

MANUEL D'ENTRETIEN

MANUALE DI MANUTENZIONE

モーターサイクル整備説明書

CONTENTS

Introduction

General Information 1

Routine Maintenance 2

Cylinder Head 3

Clutch 4

Crankshaft/Rods/Pistons 5

Transmission 6

Lubrication 7

Fuel System/Engine Management 8

Cooling System 9

Rear Suspension/Final Drive 10

Front Suspension/Steering 11

Brakes 12

Wheels/Tyres 13

Frame/Bodywork 14

Electrical System 15

Alphabetical Index 16

INTRODUCTION

This manual is designed primarily for use by trained technicians in a properly equipped workshop. However, it contains enough detail and basic information to make it useful to the owner who desires to perform his own basic maintenance and repair work. The work can only be carried out if the owner has the necessary hand and special service tools to complete the job.

A basic knowledge of mechanics, including the proper use of tools and workshop procedures is necessary in order to carry out maintenance and repair work. satisfactorily. Whenever the owner has insufficient experience or doubts his ability to do the work, all adjustments, maintenance, and repair work must be undertaken by an authorised Triumph Dealer.

In order to perform the work efficiently and to avoid costly mistakes, read the text and thoroughly familiarise yourself with procedures before starting work.

All work should be performed with great care and in a clean working area with adequate lighting.

Always use the correct special service tools or equipment specified. Under no circumstances use makeshift tools or equipment since the use of substitutes may adversely affect safe operation.

Where accurate measurements are required, they can only be made using calibrated, precision instruments.

For the duration of the warranty period, all repairs and scheduled maintenance must be performed by an authorised Triumph Dealer.

To maximise the life of your Motorcycle:

- Accurately follow the maintenance requirements of the periodic maintenance chart in the service manual.
- Do not allow problems to develop. Investigate unusual noises and changes in the riding characteristics of the motorcycle. Rectify all problems as soon as possible (immediately if safety related).
- Use only genuine Triumph parts as listed in the parts catalogue/parts microfiche.
- Follow the procedures in this manual carefully and completely. Do not take short cuts.
- Keep complete records of all maintenance and repairs with dates and any new parts installed.
- Use only approved lubricants, as specified in the owner's handbook, in the maintenance of the motorcycle.

How to use this manual

To assist in the use of this manual, the section title is given at the top.

Each major section starts with a contents page, listing the information contained in the section.

The individual steps comprising repair operations are to be followed in the sequence in which they appear.

Adjustment and repair operations include reference to service tool numbers and the associated illustration depicts the tool.

Where usage is not obvious the tool is shown in use.

Adjustment and repair operations also include reference to wear limits, relevant data, torque figures, specialist information and useful assembly details.

Warning, Caution and Note

Particularly important information is presented in the following form:

WARNING: This warning symbol identifies special instructions or procedures which, if not correctly followed, could result in personal injury, or loss of life.

CAUTION: This caution symbol identifies special instructions or procedures which, if not strictly observed, could result in damage to or destruction of equipment.

NOTE:

- **This note symbol indicates points of particular interest for more efficient and convenient operation.**

TAMPERING WITH NOISE CONTROL SYSTEM PROHIBITED

Owners are warned that the law may prohibit:

(a) The removal or rendering inoperative by any person other than for purposes of maintenance, repair or replacement, of any device or element of design incorporated into any new vehicle for the purpose of noise control prior to its sale or delivery to the ultimate purchaser or while it is in use; and

(b) the use of the vehicle after such device or element of design has been removed or rendered inoperative by any person.

REFERENCES

References

References to the left-hand or right-hand side given in this manual are made when viewing the motorcycle from the rear.

Operations covered in this manual do not always include reference to testing the motorcycle after repair. It is essential that work is inspected and tested after completion and if necessary a road test of the motorcycle is carried out particularly where safety related items are concerned.

Dimensions

The dimensions quoted are to design engineering specification with service limits where applicable.

During the period of running-in from new, certain adjustments may vary from the specification figures given in this manual. These will be reset by the dealer at the 500 mile/800 km service, and thereafter should be maintained at the figures specified in this manual.

REPAIRS AND REPLACEMENTS

Before removal and disassembly, thoroughly clean the motorcycle. Any dirt entering the engine or other parts will work as an abrasive and shorten the life of the motorcycle. Particular attention should be paid when installing a new part, that any dust or metal filings are cleared from the immediate area.

Force

Common sense should dictate how much force is necessary in assembly and disassembly. If a part seems especially difficult to remove or install, stop and examine what may be causing the problem. Never lever a component as this will cause damage both to the component itself and to the surface being levered against.

Whenever tapping to aid removal of an item is necessary, tap lightly using a hide or plastic faced mallet.

Edges

Watch for sharp edges, especially during engine disassembly and assembly. Protect the hands with industrial quality gloves when lifting the engine or turning it over.

When replacement parts are required, it is essential that only genuine Triumph parts are used.

Safety features and corrosion prevention treatments embodied in the motorcycle may be impaired if other than genuine Triumph parts are fitted. In certain territories, legislation prohibits the fitting of parts not to the manufacturer's specification.

Tightening procedure

Generally, when installing a part with several bolts, nuts or screws, they should all be started in their holes and tightened to a snug fit, evenly and in a cross pattern. This is to avoid distortion of the part and/or causing gas or oil leakage. Conversely, bolts, nuts, or screws, should all be loosened (in sequence if specified) by about a quarter of a turn and then removed.

Where there is a tightening sequence specified in this Service Manual, the bolts, nuts, or screws must be tightened in the order and by the method indicated.

Torque wrench setting figures given in this Manual must be observed. The torque tools used must be of accurate calibration.

Locking devices, where specified, must be fitted. If the efficiency of a locking device is impaired during removal it must be renewed. This applies particularly to micro-encapsulated fixings which must always be replaced if disturbed. Where necessary, the text in this manual will indicate where such a fixing is used.

GENERAL INFORMATION

CONTENTS

	Page
Ignition System Safety Precautions	1.3
Dangerous Substances	1.3
Fluoroelastomers	1.3
Engine Oils	1.3
Health Protection Precautions	1.3
Environmental Protection Precautions	1.4
Brakes	1.4
Safety Instructions	1.5
Jacking and lifting	1.5
Precautions against damage	1.5
Engine Coolant	1.5
Cleaning components	1.5
Lubrication	1.6
Joints and joint faces	1.6
Gaskets, O-rings	1.6
Liquid gasket, non-permanent locking agent	1.6
Screw threads	1.6
Locking devices	1.7
Fitting a split pin	1.7
Circlips, retaining rings	1.7
Self locking nuts	1.7
Encapsulated bolt	1.7
Oil and grease seals	1.7
Press	1.7
Ball bearing	1.7
Fuel Handling Precautions	1.8
General	1.8
Petrol - Gasoline	1.8
Fuel tank removal	1.8
Chassis repairs	1.8
Electrical Precautions	1.9
Battery disconnecting	1.9
Disciplines	1.10
Electrical wires	1.10
Inspection	1.10
Replacement Parts	1.10
Service data	1.10
Specification	1.10

IGNITION SYSTEM SAFETY PRECAUTIONS

WARNING: The ignition system produces extremely high voltages. Do not touch any part of the ignition system or any cables while the engine is running.

An electric shock caused by contact with the ignition system may lead to illness, injury or death.

WARNING: Wearers of surgically implanted heart pacemaker devices should not be in close proximity to ignition circuits and or diagnostic equipment.

The ignition system and any diagnostic equipment may interrupt the normal operation of such devices causing illness or death.

DANGEROUS SUBSTANCES

WARNING: Many liquids and other substances used in motor vehicles are poisonous and should under no circumstances be consumed and should, as far as possible, be kept from contact with the skin. These substances among others include acid, anti-freeze, asbestos, brake fluid, fuel, lubricants, and various adhesives. Always pay close attention to the instructions printed on labels and obey the instructions contained within. These instructions are included for your safety and well being.
NEVER DISREGARD THESE INSTRUCTIONS!

Fluoroelastomers

WARNING: fluoroelastomer material is used in the manufacture of various seals in Triumph motorcycles.

In fire conditions involving temperatures greater than 315°C this material will decompose and can then be potentially hazardous. Highly toxic and corrosive decomposition products, including hydrogen fluoride, carbonyl fluoride, fluorinated olefins and carbon monoxide can be generated and will be present in fumes from fires.

In the presence of any water or humidity hydrogen fluoride may dissolve to form extremely corrosive liquid hydrofluoric acid.
If such conditions exist, do not touch the material and avoid all skin contact. Skin contact with liquid or decomposition residues can cause painful and penetrating burns leading to permanent, irreversible skin and tissue damage.

ENGINE OILS

WARNING: The oil may be hot to the touch. Contact with hot oil may cause the skin to be scalded or burned.

WARNING: Prolonged or repeated contact with engine oil can lead to skin dryness, irritation and dermatitis. In addition used engine oil contains potentially harmful contaminants which can cause cancer. Wear suitable clothing and avoid skin contact.

Health Protection Precautions

- Avoid prolonged and repeated contact with oils, particularly used engine oils.
- Wear protective clothing, including impervious gloves where practicable.
- Do not put oily rags in pockets.
- Overalls must be cleaned regularly. Discard heavily soiled clothing and oil impregnated footwear.
- First aid treatment should be obtained immediately for open cuts and wounds. Always be aware of who your nearest first aider is and where the medical facilities are kept.
- Use barrier creams, applying before each work period to protect the skin from the effects of oil and grease and to aid removal of the same after completing work.
- Wash with soap and water to ensure all oil is removed (skin cleansers and nail brushes will help). Preparations containing lanolin replace the natural skin oils which have been removed.
- Do not use petrol, kerosene, diesel fuel, gas oil, thinners or solvents for cleaning skin.
- If skin disorders develop, obtain medical advice without delay.
- Where practicable, de-grease components prior to handling.

WARNING: Any risk of eye injury must be avoided. Always wear eye protection when using a hammer, air line, cleaning agent or where there is ANY risk of flying debris or chemical splashing

ENVIRONMENTAL PROTECTION PRECAUTIONS

CAUTION: Do not pour oil on the ground, down sewers or drains, or into water courses. To prevent pollution of water courses etc., dispose of used oil sensibly. If in doubt contact your local authority.

Burning of used engine oil in small space heaters or boilers can be recommended only for units of approved design. If in doubt check with the appropriate local authority and/or manufacturer of the approved appliance.

Dispose of used oil and used filters through authorised waste disposal contractors, to licensed waste disposal sites, or to the waste oil reclamation trade. If in doubt, contact the Local Authority for advice on disposal facilities.

BRAKES

WARNING: Brake fluid is hygroscopic which means it will absorb moisture from the air. Any absorbed moisture will greatly reduce the boiling point of the brake fluid causing a reduction in braking efficiency.

Replace brake fluid in line with the routine maintenance schedule. A dangerous riding condition could result if this important maintenance item is neglected!

Do not spill brake fluid onto any area of the bodywork as this will damage any painted or plastic surface.

Always use new brake fluid from a sealed container and never use fluid from an unsealed container or from one which has been previously opened.

Do not mix different brands of fluid. Check for fluid leakage around brake fittings, seals and joints.

Check regularly for brake hose damage.

FAILURE TO OBSERVE ANY OF THE ABOVE WARNINGS MAY REDUCE BRAKING EFFICIENCY LEADING TO AN ACCIDENT.

WARNING: If there has been an appreciable drop in the level of the fluid in either brake fluid reservoir, consult your authorised Triumph Dealer for advice before riding.

If the brake lever or pedal feels soft when it is applied, or if the lever/pedal travel becomes excessive, there may be air in the brake lines or the brake may be defective.

It is dangerous to operate the motorcycle under such conditions and remedial action must be taken by your authorised Triumph Dealer before riding the motorcycle.

Failure to take remedial action may reduce braking efficiency leading to an accident.

WARNING: Use only D.O.T. 4 specification brake fluid as listed in the general information section of this manual. The use of brake fluids other than those D.O.T. 4 fluids listed in the general information section may reduce the efficiency of the braking system leading to an accident.

Failure to change the brake fluid at the interval specified in the routine maintenance schedule may reduce braking efficiency resulting in an accident.

WARNING: Never use mineral based grease in any part of the braking system or in any area where contact with the braking system is possible. Mineral based grease will damage the hydraulic seals in the calipers and master cylinders.

Damage caused by contact with mineral based grease may reduce braking efficiency resulting in an accident.

SAFETY INSTRUCTIONS

Jacking and lifting

WARNING: Always ensure that any lifting apparatus has adequate load and safety capacity for the weight to be lifted. Ensure the motorcycle is well supported to prevent any possibility of the machine falling prior to, and during lifting or jacking.

Never rely on a single means of support when working with the motorcycle. Use additional safety supports.

Do not leave tools, lifting equipment, spilt oil, etc. in a place where they could become a hazard to health. Always work in a clean, tidy area and put all oils away when the work is finished.

WARNING: Before starting work, ensure the motorcycle is stabilised and adequately supported. This will help prevent it from falling and causing injury to the operator or damage to the motorcycle.

Precautions against damage

Avoid spilling brake fluid or battery acid on any part of the bodywork. Wash spillages off with water immediately.

Disconnect the battery earth lead before starting work, see **ELECTRICAL PRECAUTIONS.**

Always use the recommended service tool where specified.

Protect exposed bearing and sealing surfaces, and screw threads from damage.

Engine Coolant

WARNING: Coolant mixture which is blended with anti-freeze and corrosion inhibitors contains toxic chemicals which are harmful to the human body. Never swallow anti-freeze, corrosion inhibitors or any of the motorcycle coolant.

WARNING: Do not remove the radiator cap when the engine is hot. When the engine is hot, the coolant inside the radiator is hot and also under pressure. Contact with the pressurised coolant will cause scalds and skin damage.

CAUTION: The coolant anti-freeze contains a corrosion inhibitor which helps prevent damage to the metal surfaces inside the cooling system. Without this inhibitor, the coolant would 'attack' the metals and the resulting corrosion would cause blockages in the cooling system leading to engine overheating and damage. Always use the correct anti-freeze as specified in the Owner's Handbook. Never use a methanol based anti-freeze as this does not contain the required corrosion inhibition properties.

CAUTION: Distilled water must be used with the anti-freeze (see specification for anti-freeze) in the cooling system.

If hard water is used in the system, it causes scale accumulation in the water passages, and considerably reduces the efficiency of the cooling system. Reduced cooling system efficiency may lead to the engine overheating and suffering severe damage.

Cleaning components

A high flash-point solvent is recommended to reduce fire hazard.

Always follow container directions regarding the use of any solvent.

Always use the recommended cleaning agent or equivalent.

Do not use degreasing equipment for components containing items which could be damaged by the use of this process. Whenever possible, clean components and the area surrounding them before removal. Always observe scrupulous cleanliness when cleaning dismantled components.

Lubrication

Engine wear is generally at its maximum while the engine is warming up and before all the rubbing surfaces have an adequate lubricative film. During assembly, oil or grease (whichever is more suitable) should be applied to any rubbing surface which has lost its lubricative film. Old grease and dirty oil should be cleaned off. This is because used lubricants will have lost some lubricative qualities and may contain abrasive foreign particles.

Use recommended lubricants. Some oils and greases in particular should be used only in certain applications and may be harmful if used in an application for which they are not intended. This manual makes reference to molybdenum disulphide grease in the assembly of certain engine and chassis parts. Always check manufacturer recommendations before using such special lubricants.

Joints and joint faces

Assemble joints dry unless otherwise specified in this Manual.

If gaskets and/or jointing compound is recommended for use; remove all traces of old jointing material prior to reassembly. Do not use a tool which will damage the joint faces and smooth out any scratches or burrs on the joint faces using an oil stone. Do not allow dirt or jointing material to enter any tapped holes.

Gaskets, O-rings

Do not re-use a gasket or O-ring once it has been in service. The mating surfaces around the gasket should be free of foreign matter and perfectly smooth to avoid oil or compression leaks.

Liquid gasket, non-permanent locking agent

Follow manufacturer's directions for cleaning and preparing surfaces where these compounds will be used. Apply sparingly as excessive amounts of sealer may block engine oil passages and cause serious damage.

Prior to reassembly, blow through any pipes, channels or crevices with compressed air.

WARNING: To prevent injury, always use eye, face and ear protection when using compressed air. Always wear protective gloves if the compressed air is to be directed in proximity to the skin.

Screw threads

Metric threads to ISO standard are used.

Damaged nuts, bolts and screws must always be discarded.

Castellated nuts must not be slackened back to accept a split-pin, except in those recommended cases when this forms part of an adjustment.

Do not allow oil or grease to enter blind threaded holes. The hydraulic action on screwing in the bolt or stud could split the housing.

Always tighten a nut or bolt to the recommended torque figure. Damaged or corroded threads can affect the torque reading.

Unless specified, threaded fixings must always be fitted dry (no lubrication).

WARNING: Never lubricate a thread unless instructed to do so.

When a thread of a fixing is lubricated, the thread friction is reduced. When the fixing is tightened, reduced friction will cause overtightening and possible fixing failure.

A fixing which fails in service could cause component detachment leading to loss of control and an accident.

Locking devices

Always release locking tabs and fit new locking washers, do not re-use locking tabs.

Fitting a split pin

Always fit new split-pins of the correct size for the hole in the bolt or stud. Do not slacken back castle nuts when fitting split pin.

Always fit new roll pins of an interference fit in the hole.

Circlips, retaining rings

place any circlips and retaining rings that are removed. Removal weakens and deforms circlips causing looseness in the circlip groove. When installing circlips and retaining rings, take care to compress or expand them only enough to install them.

Always use the correct replacement circlip as recommended in the Triumph parts catalogue.

Self locking nuts

Self-locking nuts can be re-used, providing resistance can be felt when the locking portion passes over the thread of the bolt or stud.

DO NOT re-use self-locking nuts in critical locations, e.g. suspension components. Always use the correct replacement self-locking nut.

Encapsulated bolt

An encapsulated bolt can be identified by a coloured section of thread which is treated with a locking agent.

Unless a specified repair procedure states otherwise, encapsulated bolts cannot be reused and MUST be replaced if disturbed or removed.

WARNING: Failure to replace an encapsulated bolt could lead to a dangerous riding condition. Always replace encapsulated bolts.

Oil and grease seals

Replace any oil or grease seals that are removed. Removal will cause damage to an oil seal which, if re-used, would cause an oil leak.

Ensure the surface on which the new seal is to run is free of burrs or scratches. Renew the component if the original sealing surface cannot be completely restored.

Protect the seal from any surface which could cause damage over which it has to pass when being fitted. Use a protective sleeve or tape to cover the relevant surface and avoid touching the sealing lip.

Lubricate the sealing lips with a recommended lubricant. This will help to prevent damage in initial use. On dual lipped seals, smear the area between the lips with grease.

When pressing in a seal which has manufacturer's marks, press in with the marks facing out.

Seals must be pressed into place using a suitable driver. Use of improper tools will damage the seal.

Press

A part installed using a press or driver, such as a wheel bearing, should first be coated with oil on its outer or inner circumference so that it will locate smoothly.

Ball bearing

When installing a ball bearing, the bearing race which is an interference fit should be pushed by a suitable driver. This prevents severe stress or damage to the load carrying components. Press a ball bearing until it touches the shoulder in the bore or on the shaft.

Press or drift seals to the depth of its housing, with the sealing lip facing the lubricant to be retained if the housing is shouldered, or flush with the face of the housing where no shoulder is provided.

FUEL HANDLING PRECAUTIONS

General

The following information provides basic precautions which must be observed if petrol (gasoline) is to be handled safely. It also outlines other areas of risk which must not be ignored. This information is issued for basic guidance only and, if in doubt, appropriate enquiries should be made of your local Fire Officer.

Petrol - Gasoline

When petrol (gasoline) evaporates it produces 150 times its own volume in vapour which when diluted with air becomes a readily ignitable mixture. The vapour is heavier than air and will always fall to the lowest level. It can readily be distributed throughout a workshop by air currents, consequently, even a small spillage of petrol (gasoline) is potentially very dangerous.

WARNING: Petrol (gasoline) is highly flammable and can be explosive under certain conditions. When opening the fuel tank cap always observe all the following items;

Turn the motorcycle ignition switch OFF.

Do not smoke.

Always have a fire extinguisher containing FOAM, CO^2, HALON or POWDER close at hand when handling or draining fuel or fuel systems. Fire extinguishers must also be present in areas where fuel is stored.

Always disconnect the vehicle battery, negative (black) lead first, before carrying out dismantling or draining work on a fuel system.

Whenever petrol (gasoline) is being handled, drained or stored or when fuel systems are being dismantled, make sure the area is well ventilated. All potential forms of ignition must be extinguished or removed (this includes any appliance with a pilot light). Any lead-lamps must be flame-proof and kept clear of any fuel spillage.

Warning notices must be posted at a safe distance from the site of the work to warn others that petrol is being openly handled. The notice must instruct the reader of the precautions which must be taken.

Failure to observe any of the above warnings may lead to a fire hazard which could result in personal injury.

WARNING: No one should be permitted to repair components associated with petrol/gasoline without first having specialist training on the fire hazards which may be created by incorrect installation and repair of items associated with petrol/gasoline.
Repairs carried out by untrained personnel could bring about a safety hazard leading to a risk of personal injury.

WARNING: Draining or extraction of petrol/gasoline from a vehicle fuel tank must be carried out in a well ventilated area.

The receptacle used to contain the petrol/ gasoline must be more than adequate for the full amount of fuel to be extracted or drained. The receptacle should be clearly marked with its contents, and placed in a safe storage area which meets the requirements of local authority regulations.

When petrol/gasoline has been extracted or drained from a fuel tank, the precautions governing naked lights and ignition sources should be maintained.
Failure to observe any of the above warnings could bring about a safety hazard leading to a risk of personal injury.

Fuel tank removal

Fuel tanks should have a 'PETROL (GASOLINE) VAPOUR' warning label attached to them as soon as they are removed from the vehicle. In all cases, they must be stored in a secured, marked area.

Chassis repairs

WARNING: If the motorcycle is involved in an accident or collision it must be taken to an authorised Triumph dealer for repair or inspection. Any accident can cause damage to the motorcycle which, if not correctly repaired, may cause a second accident which may result in injury or death.

The frame must not be modified as any modification to the frame such as welding or drilling may weaken the frame resulting in an accident.

ELECTRICAL PRECAUTIONS

The following guidelines are intended to ensure the safety of the operator whilst preventing damage to the electrical and electronic components fitted to the motorcycle. Where necessary, specific precautions are detailed in the relevant sections of this manual which should be referred to prior to commencing repair operations.

Equipment - Prior to commencing any test procedure on the motorcycle ensure that the relevant test equipment is working correctly and any harness or connectors are in good condition, in particular mains leads and plugs.

WARNING: The ignition system produces extremely high voltages. Do not touch any part of the ignition system or any cables while the engine is running.

An electric shock caused by contact with the ignition system may lead to illness, injury or death.

WARNING: Wearers of surgically implanted heart pacemaker devices should not be in close proximity to ignition circuits and or diagnostic equipment.

The ignition system and any diagnostic equipment may interrupt the normal operation of such devices causing illness or death.

WARNING: The battery contains harmful materials. Always keep children away from the battery whether or not it is fitted in the motorcycle.
Do not jump start the battery, touch the battery cables together or reverse the polarity of the cables as any of these actions may cause a spark which would ignite battery gasses causing a risk of personal injury.

High Voltage Circuits - Whenever disconnecting live H.T. circuits always use insulated pliers. Exercise caution when measuring the voltage on the coil terminals while the engine is running, high voltage spikes can occur on these terminals.

Connectors and Harness - The engine of a motorcycle is a particularly hostile environment for electrical components and connectors. Always ensure these items are dry and oil free before disconnecting and connecting test equipment. Never force connectors apart either by using tools or by pulling on the wiring itself. Always ensure locking mechanisms are disengaged before removal and note the orientation to enable correct reconnection. Ensure that any protective covers and substances are replaced if disturbed.

Having confirmed a component to be faulty, switch off the ignition and disconnect the battery negative (black) lead first. Remove the component and support the disconnected harness. When replacing the component keep oily hands away from electrical connection areas and push connectors home until any locking mechanism becomes fully engaged.

Battery disconnecting

Before disconnecting the battery, switch off all electrical equipment.

WARNING: To prevent the risk of a battery exploding and to prevent damage to electrical components *ALWAYS* disconnect the battery negative (black) lead first. When reconnecting the battery, always connect the positive (red) lead first, then the negative (black) lead. Always disconnect the battery when working on any part of the electrical system.
Failure to observe the above warnings may lead to electrical damage and a fire hazard which could cause personal injury.

Always ensure that battery leads are routed correctly and are not close to any potential chafing points.

Disciplines

Switch off the ignition prior to making any connection or disconnection in the system. An electrical surge can be caused by disconnecting 'live' connections which can damage electronic components.

Ensure hands and work surfaces are clean and free of grease, swarf, etc. as grease collects dirt which can cause tracking or high-resistance contacts.

Prior to commencing any test, and periodically during any test, touch a good earth to discharge body static. This is because some electronic components are vulnerable to static electricity.

Electrical wires

All the electrical wires are either single-colour or two-colour and, with only a few exceptions, must be connected to wires of the same colour. On any of the two-colour wires there is a greater amount of one colour and a lesser amount of a second colour. A two-colour wire is identified by first the primary colour and then the secondary colour. For example, a yellow wire with thin red stripes is referred to as a 'yellow/red' wire; it would be a 'red/yellow' wire if the colours were reversed to make red the main colour.

Inspection

Disassembled parts should be visually inspected and replaced with new ones if there are any signs of the following:

Abrasions, cracks, hardening, warping, bending, dents, scratches, colour changes, deterioration, seizure or damage of any nature.

Replacement Parts

WARNING: Only Triumph approved parts should be used to service, repair or convert Triumph motorcycles. To ensure that Triumph approved parts are used, always order parts, accessories and conversions from an authorised Triumph dealer. The fitting of non-approved parts, accessories or conversions may adversely affect the handling, stability or other aspects of the motorcycle operation which may result in an accident causing serious injury or death.

WARNING: Always have Triumph approved parts, accessories and conversions fitted by an authorised Triumph dealer. The fitment of parts, accessories and conversions by a dealer who is not an authorised Triumph dealer may affect the handling, stability or other aspects of the motorcycle operation which may result in an accident causing serious injury or death.

WARNING: Always have Triumph approved parts, accessories and conversions fitted by a trained technician. To ensure that a trained technician is used, have an authorised Triumph dealer fit the parts. The fitment of parts, accessories and conversions by personnel other than a trained technician at an authorised Triumph dealer may affect the handling, stability or other aspects of the motorcycle operation which may result in an accident causing serious injury or death.

Service data

The service data listed in this manual gives dimensions and specifications for brand new, original parts. Where it is permissible to allow a part to exceed these figures, then the service limit is given.

The terms of the motorcycle warranty will be invalidated by the fitting of other than genuine Triumph parts.

All genuine Triumph parts have the full backing of the motorcycle warranty. Triumph dealers are obliged to supply only genuine Triumph recommended parts.

Specification

Triumph are constantly seeking to improve the specification, design and production of their motorcycles and alterations take place accordingly.

While every effort has been made to ensure the accuracy of this Manual, it should not be regarded as an infallible guide to current specifications of any particular motorcycle.

Authorised Triumph Dealers are not agents of Triumph and have no authority to bind the manufacturer by any expressed or implied undertaking or representation.

Service tools

Special service tools have been developed to facilitate removal, dismantling and assembly of certain mechanical components in a practical manner without causing damage. Some operations in this service manual cannot be carried out without the aid of the relevant service tools. Where this is the case, the tools required will be described during the procedure.

Special service tools:-

T3880105 - Angular Torque Gauge



3880080-T0301 - Fork Seal/Bearing Drift

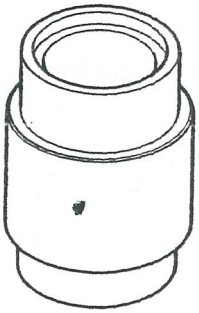

3880160-T0301 - Fork Filler/Evacuator

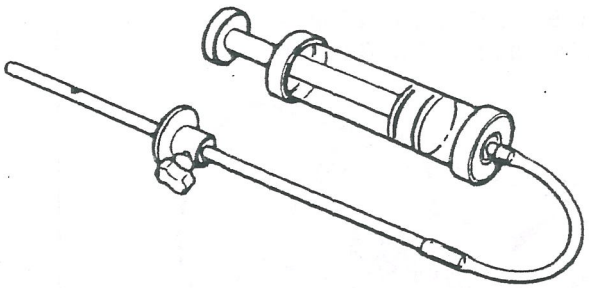

T3880311 - Oil Filter Wrench

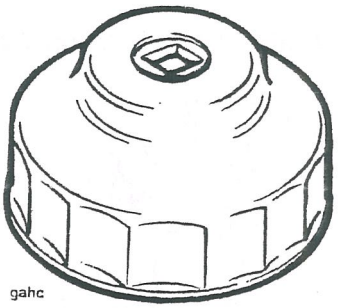

T3880048 - Fuel Pressure Gauge

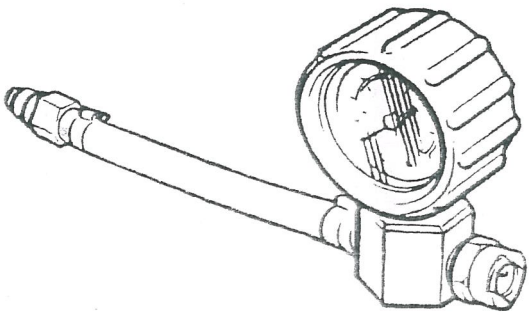

3880090-T0301 Damper Tube Rod

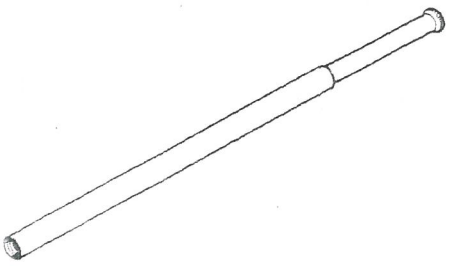

T3880350 - Wrench, Swing Arm Adjuster

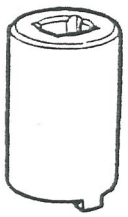

T3880355 - Wrench, Swing Arm Lockring

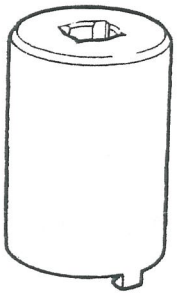

T3880360 - Holder, Clutch Assembly

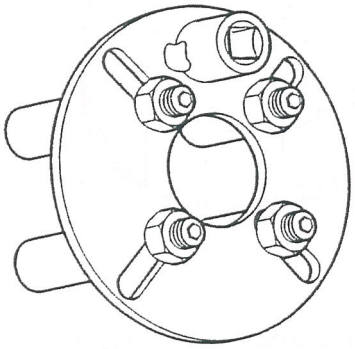

T3880365 - Puller, Alternator Rotor

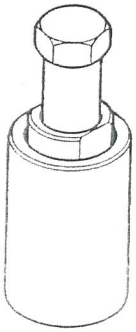

T3880370 - Restraint, Oil Pump Gear

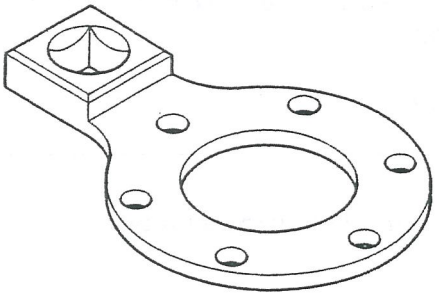

T3880380 - Wrench, Engine Mountings

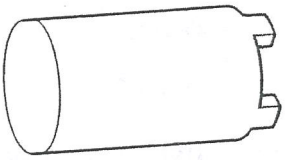

T3880315 - Extractor, Liners
(use with adapter T3880316)

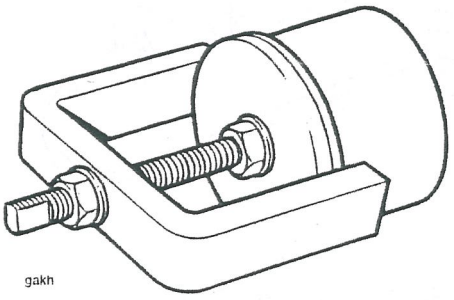

T3880316 - Adapter, Liner Puller

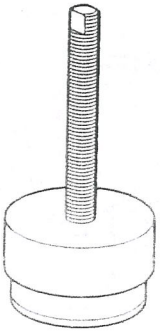

T3880250 - Engine Management Diagnostics

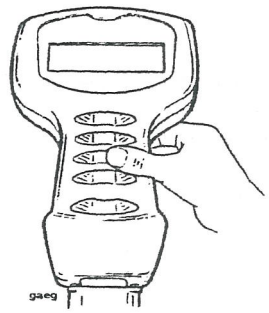

T3880375 - Alternator rotor holder

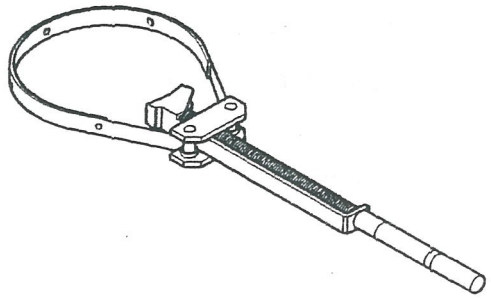

3880085-T0301 - Adapter, Fork Rod

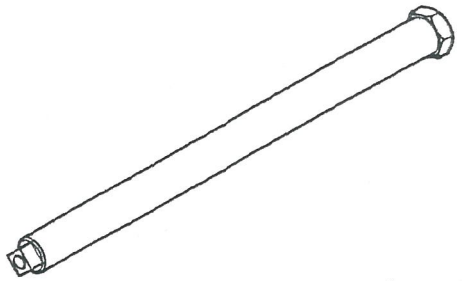

T3880127 - Fuel Pump Hose Extension Kit
T3880124 - Fuel Pump Cable Extension

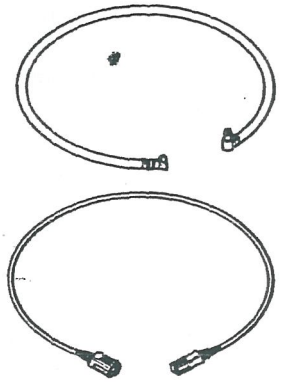

Full Specification		TT600	Speed Four
Engine			
Engine		4 Cylinder 16 Valve DOHC	4 Cylinder 16 Valve DOHC
Arrangement		Transverse In-line	Transverse In-line
Displacement		599cc	599cc
Bore x Stroke		68mm x 41.3mm	68mm x 41.3mm
Compression Ratio		12.5 : 1	12.5 : 1
Cylinder Numbering		Left to Right (No.1 adjacent to alternator)	Left to Right (No.1 adjacent to alternator)
Firing order		1-2-4-3	1-2-4-3
Max. Power (DIN 70020)		110PS @ 12750 RPM	98PS @ 11750 RPM
Max. Torque		63Nm @ 11000 RPM	62.5Nm @ 10750 RPM
Cylinder Head			
Valve Head Dia.	In.	28.6 mm	28.6 mm
	Ex.	22.8 mm	22.8 mm
Valve Lift	In.	9.0 mm	7.7 mm
	Ex.	8.0 mm	7.8 mm
Valve Stem Dia.	In.	3.975 mm/ 3.990 mm (std) 3.960 (service limit)	3.975 mm/ 3.990 mm (std) 3.960 (service limit)
	Ex.	3.975 mm/ 3.990 mm (std) 3.940 (service limit)	3.975 mm/ 3.990 mm (std) 3.940 (service limit)
Valve Guide Bore Dia.		4.00 mm / 4.015 mm (std) 4.080 (service limit)	4.00 mm / 4.015 mm (std) 4.080 (service limit)
Valve Seat Width (in head)		0.9 mm/1.1 mm (std) 1.5 mm (service limit)	0.9 mm/1.1 mm (std) 1.5 mm (service limit)
Valve Seat Width (valve)		0.9 mm/1.1 mm (std) 1.5 mm (service limit)	0.9 mm/1.1 mm (std) 1.5 mm (service limit)
Valve Seat Angle		45°	45°
Valve Spring Length	In (outer)	50.50 - 51.50 mm (std) 48.50 (service limit)	50.50 - 51.50 mm (std) 48.50 (service limit)
	In (inner)	42.50 - 43.50 mm (std) 40.50 (service limit)	42.50 - 43.50 mm (std) 40.50 (service limit)
	Ex	46.50 - 47.50 (std) 44.50 (service limit)	46.50 - 47.50 (std) 44.50 (service limit)
Valve Spring 'Load at Length'	In	370 N at 43 mm	370 N at 43 mm
	Ex	275 N at 37.5 mm	275 N at 37.5 mm
Valve Clearance	In.	0.15 mm/ 0.25 mm	0.15 mm/ 0.25 mm
	Ex.	0.2 mm/0.3 mm	0.2 mm/0.3 mm
Valve Bucket Bore Dia.	In	28.515 mm/28.535 mm	28.515 mm/28.535 mm
	Ex	25.015 mm/25.035 mm	25.015 mm/25.035 mm
Valve Bucket Dia.	In	28.490 mm/28.476 mm	28.490 mm/28.476 mm
	Ex	24.990 mm/24.976 mm	24.990 mm/24.976 mm

Full Specification	TT600	Speed Four
Cylinder Head (continued)		
Valve Timing (to VIN 115673) . Inlet . . .	Open 19° BTDC (@1.0mm lift) Close 47° ABDC (@1.0mm Lift) Duration 246°	
Exhaust	Open 53° BBDC (@1.0 mm Lift) Close 13° ATDC (@ 1.0 mm Lift) Duration 246°	
Valve Timing (from VIN 115674) Inlet . . .	Open 14° BTDC (@1.0mm lift) Close 46° ABDC (@1.0mm Lift) Duration 240°	Open 5° BTDC (@1.0mm lift) Close 33° ABDC (@1.0mm Lift) Duration 218°
Exhaust	Open 39° BBDC (@1.0 mm Lift) Close 11° ATDC (@ 1.0 mm Lift) Duration 230°	Open 34° BBDC (@1.0 mm Lift) Close 6° ATDC (@ 1.0 mm Lift) Duration 220°
Camshaft Journal Dia.	23.90 mm/23.93 mm 22.87 (service limit)	23.90 mm/23.93 mm 22.87 (service limit)
Camshaft Journal Clearance	0.10 mm 0.17 mm (service limit)	0.10 mm 0.17 mm (service limit)
Camshaft Journal Bore Dia.	24.000 mm/24.021 mm	24.000 mm/24.021 mm
Camshaft Lobe Service Limit . . In . . . . . (nose to base circle) Ex	34.98 mm 33.85 mm	33.68 mm 33.65 mm
Camshaft End Float	0.030 mm /0.130 mm	0.030 mm /0.130 mm
Camshaft Run-out	0.015 mm max	0.015 mm max
Camchain Tensioner Spring Free Length	52.0mm	52.0mm
Clutch/Primary Drive		
Primary Drive Type	Gear	Gear
Reduction Ratio .	1.864:1 (82/44)	1.864:1 (82/44)
Clutch Type	Wet	Wet
No. of Friction Plates	9	9
Plate Flatness Limit	0.15 mm	0.15 mm
Friction Plate Thickness (new)	2.92 - 3.08 mm (std) 2.72 mm (service limit)	2.92 - 3.08 mm (std) 2.72 mm (service limit)
Clutch Actuation Method	Cable	Cable
Cable Free Play (at lever)	2-3 mm	2-3 mm

Full Specification	TT600	Speed Four
Piston/Crankshaft		
Cylinder Liner Dia.	68.000 mm/68.015 mm 68.05 mm (service limit)	68.000 mm/68.015 mm 68.05 mm (service limit)
Piston Diameter	67.990 +/- 0.005 mm (std) 67.91 mm (service limit)	67.990 +/- 0.005 mm (std) 67.91 mm (service limit)
Piston Ring to Groove Clearance Top	0.02 mm/ 0.03 mm (std) 0.16 mm (service limit)	0.02 mm/ 0.03 mm (std) 0.16 mm (service limit)
Second	0.02 mm/0.06 mm (std) 0.16 mm (service limit)	0.02 mm/0.06 mm (std) 0.16 mm (service limit)
Piston Pin Diameter	14.995 mm/15.000 mm (std) 14.985 mm (service limit)	14.995 mm/15.000 mm (std) 14.985 mm (service limit)
Piston Bore Diameter	15.004 mm/15.012 mm (std) 15.051 mm (service limit)	15.004 mm/15.012 mm (std) 15.051 mm (service limit)
Piston Ring Groove Width Top	0.81 mm/ 0.83 mm (std) 0.91 mm (service limit)	0.81 mm/ 0.83 mm (std) 0.91 mm (service limit)
Second	0.81 mm/0.83 mm (std) 0.91 mm (service limit)	0.81 mm/0.83 mm (std) 0.91 mm (service limit)
Oil	1.51 mm/ 1.53 mm	1.51 mm/ 1.53 mm
Piston Ring End Gap Top	0.15 mm /0.30 mm (std) 0.60 mm (service limit)	0.15 mm /0.30 mm (std) 0.60 mm (service limit)
(new ring when fitted in bore) Second	0.25 mm /0.40 mm (std) 0.75 mm (service limit)	0.25 mm /0.40 mm (std) 0.75 mm (service limit)
Oil	0.20 mm/ 0.70 mm	0.20 mm/ 0.70 mm
Gudgeon Pin Bore Dia. In Piston	15.004 mm/15.012 mm (std) 15.051 (service limit)	15.004 mm/15.012 mm (std) 15.051 (service limit)
Gudgeon Pin Dia.	14.995 mm/15.000 mm (std) 14.985 mm (service limit)	14.995 mm/15.000 mm (std) 14.985 mm (service limit)
Gudgeon Pin to Bore Clearance	0.04 mm/0.017 mm (std) 0.066 mm (service limit)	0.04 mm/0.017 mm (std) 0.066 mm (service limit)
Connecting Rod Small End Dia.	15.016 mm/15.034 mm 15.044 mm (service limit)	15.016 mm/15.034 mm 15.044 mm (service limit)
Connecting Rod Big End Side Clearance	0.10 mm/0.30 mm 0.50 mm (service limit)	0.10 mm/0.30 mm 0.50 mm (service limit)
Crankshaft Big End Journal Dia.	29.984 mm/30.000 mm 29.960 (service limit)	29.984 mm/30.000 mm 29.960 (service limit)
Crankshaft Big End Bearing Clearance	0.031 mm/0.059 mm 0.07 mm (service limt)	0.031 mm/0.059 mm 0.07 mm (service limit)
Crankshaft Main Journal Dia.	29.984 mm/30.000 mm 29.960 mm (service limit)	29.984 mm/30.000 mm 29.960 mm (service limit)
Crankshaft Main Bearing Clearance	0.014 mm/0.042 mm 0.070 mm (service limit)	0.014 mm/0.042 mm 0.070 mm (service limit)

Full Specification	TT600	Speed Four
Piston/Crankshaft (continued)		
Crankshaft End Float	0.05 mm/0.20 mm 0.40 mm (service limit)	0.05 mm/0.20 mm 0.40 mm (service limit)
Crankshaft run-out	0.02 mm std 0.05 mm (service limit)	0.02 mm std 0.05 mm (service limit)
Transmission		
Type	6 Speed Constant Mesh	6 Speed Constant Mesh
Gear Ratios 1st	2.923 (38/13)	2.923 (38/13)
2nd	2.063 (33/16)	2.063 (33/16)
3rd	1.632 (31/19)	1.632 (31/19)
4th	1.381 (29/21)	1.381 (29/21)
5th	1.217 (28/23)	1.217 (28/23)
6th	1.083 (26/24)	1.083 (26/24)
Gear Selector Fork Thickness	5.9 mm/6.0 mm (5.8 mm min.)	5.9 mm/6.0 mm (5.8 mm min.)
Gear Selector Groove Width	6.0 mm/6.15 mm (6.25 mm max)	6.0 mm/6.15 mm (6.25 mm max)
Gear Selector Fork to Groove Clearance	0.25 mm max	0.25 mm max
Final Drive	Chain	Chain
Final Drive Ratio	3.0:1 (42/14 or 45/15)	3.0:1 (42/14 or 45/15)
Chain Type	DID 525 VM2	DID 525 VM2
No. of Links	106 (42/15 gearing) / 108 (45/15 gearing)	106 (42/15 gearing) / 108 (45/15 gearing)
20 Link Length	317.5 mm/323.85mm	317.5 mm/323.85mm
[ ] Chain Slack	25–35 mm	25–35 mm
Chain lubrication	Mobil chain spray	Mobil chain spray
Lubrication		
Oil Capacity (incl. filter, dry fill)	4.0 litres	4.0 litres
Oil and filter change	3.8 litres	3.8 litres
Oil change only	3.5 litres	3.5 litres
Recommended Oil	Semi or fully synthetic 15W/50 oil conforming to API SH and JASO MA specifications	Semi or fully synthetic 15W/50 oil conforming to API SH and JASO MA specifications
Oil Pressure (in main gallery)	4.6 Bar @6000 rpm (@ 80°C Oil Temp.)	4.6 Bar @6000 rpm (@ 80°C Oil Temp.)
Oil Pump Rotor Tip Clearance	0.15 mm, (0.20 mm max)	0.15 mm, (0.20 mm max)
Oil Pump Body Clearance	0.15 mm/0.22 mm (0.35 mm max)	0.15 mm/0.22 mm (0.35 mm max)
Oil Pump Rotor End Float	0.02 mm/0.07 mm (0.10 mm max)	0.02 mm/0.07 mm (0.10 mm max)

Full Specification	TT600	Speed Four
Ignition System		
Type	Digital Inductive	Digital Inductive
Electronic Rev-Limiter	14000 rpm	13000 rpm
Pick up Coil Air Gap	0.75 mm ±0.25 mm	0.75 mm ±0.25 mm
Pick up Coil Resistance	0.56 KΩ ± 10% @ 20°C	0.56 KΩ ± 10% @ 20°C
Ignition Coil Type	Plug-top	Plug-top
Spark Plug Type	NGK CR9EK	NGK CR9EK
Spark Plug Gap	0.7 mm	0.7 mm
Fuel System		
Fuel Type	Unleaded, 95 RON (U.S. 89 CLC/AKI)	Unleaded, 95 RON (U.S. 89 CLC/AKI)
Fuel Tank Capacity	17 Litres	17 Litres
Low Level Warning Lamp	3 litres remaining	3 litres remaining
Fuel Pump Type	Submerged	Submerged
Fuel Pressure (nominal)	3 Bar	3 Bar
Purge control system	Electronic via fuel system ECU	Electronic via fuel system ECU
Fuel Injection System		
Type	Electronic,sequential	Electronic,sequential
Idle Speed	1100rpm	1100rpm
Injector Type	SAGEM F-type short	SAGEM F-type short
Throttle	Cable/twist grip/electronic throttle potentiometer	Cable/twist grip/electronic throttle potentiometer
Control Sensors	Barometric Pressure Throttle Position, Coolant Temperature Crankshaft Position, Induction air temperature	Barometric Pressure Throttle Position, Coolant Temperature Crankshaft Position, Induction air temperature
Cooling System		
Coolant Mixture	50/50 Distilled Water/Anti-Freeze	50/50 Distilled Water/Anti-Freeze
Anti-Freeze Type	Mobil Antifreeze	Mobil Antifreeze
Freezing Point	-35°C	-35°C
Cooling System Capacity	2.5 Litres	2.5 Litres
Radiator Cap Opening Pressure	1.1Bar	1.1Bar
Thermostat Opening Temperature	84°C (nominal)	84°C (nominal)
Cooling Fan Switch On Temperature	100°C	100°C
Temperature Gauge Sensor Resistance	3KΩ @ 15°C	3KΩ @ 15°C

Full Specification	TT600	Speed Four
Suspension		
Front Fork Travel	120 mm	120 mm
Recommended Fork Oil Grade	Mobil10W	Mobil10W
Oil Level (fork fully compressed)	132 mm	132 mm
Oil Volume (dry fill)	455 cc	455 cc
Front Fork Pull Through	30 mm(above top yoke)	36 mm(above top yoke)
Rear Wheel Travel	120 mm	120 mm
Rear Suspension Bearing Grease	Mobil Grease HP 222	Mobil Grease HP 222
Brakes		
Front type	Two hydraulically actuated four piston calipers acting on twin discs	Two hydraulically actuated four piston calipers acting on twin discs
Caliper Piston Dia.	33.96 mm/30.23mm	33.96 mm/30.23mm
Disc Dia.	310 mm	310 mm
Disc Thickness	4 mm (3.5mm minimum)	4 mm (3.5mm minimum)
Disc Run-out Max.	0.1 mm	0.1 mm
Master Cylinder Diameter	14 mm	14 mm
Recommended Fluid	Mobil Universal Brake and Clutch Fluid DOT4	Mobil Universal Brake and Clutch Fluid DOT4
Rear Type	Hydraulically actuated single piston caliper single disc	Hydraulically actuated single piston caliper single disc
Caliper Piston Dia.	38 mm	38 mm
Dia.	220 mm	220 mm
Disc Thickness	5 mm (4.5mm minimum)	5 mm (4.5mm minimum)
Disc Run-out Max.	0.15 mm	0.15 mm
Master Cylinder Diameter	14 mm	14 mm
Recommended Fluid	Mobil Universal Brake and Clutch Fluid DOT4	Mobil Universal Brake and Clutch Fluid DOT4

Full Specification	TT600	Speed Four
Wheels and Tyres		
Front Wheel Rim Axial Run-out	0.6 mm	0.6 mm
Front Wheel Rim Radial Run-out	0.6 mm	0.6 mm
Front Tyres	See owner's handbook	See owner's handbook
Front Tyre Pressure (cold)	2.4 Bar (34psi)	2.4 Bar (34psi)
Front Tyre Tread Depth min.	2.0 mm	2.0 mm
Rear Wheel Rim Axial Run-out	0.6 mm	0.6 mm
Rear Wheel Rim Radial Run-out	0.6 mm	0.6 mm
Rear Tyres	See owner's handbook	See owner's handbook
Rear Tyre Pressure (cold)	2.7 Bar (38psi)	2.7 Bar (38psi)
Rear Tyre Tread Depth min.	2.0 mm-up to 80 mph (130 km/h) 3.0 mm-over 80 mph (130 km/h)	2.0 mm-up to 80 mph (130 km/h) 3.0 mm-over 80 mph (130 km/h)

WARNING: Triumph motorcycles must not be operated above the legal road speed limit except in authorised closed course conditions.

Frame		
Frame Type	Twin-spar aluminium	Twin-spar aluminium
Overall Length	2060 mm	2060 mm
Overall Width	665 mm	665 mm
Overall Height	1150 mm	1110 mm
Wheelbase	1395 mm	1395 mm
Seat Height	810 mm	810 mm
Castor	24.6°	24.6°
Trail	89.1 mm	89.1 mm
Dry Weight	170 kg	170 kg
Max. Payload (rider, passenger, luggage & accessories)	195 kg	195 kg
Electrical Equipment		
Battery Type	Sealed	Sealed
Battery Rating	12V-10 Amp. hour	12V-10 Amp. hour
Alternator Rating	25A	25A
Fuses	See section 15	See section 15

Torque Wrench Settings

Cylinder Head Area

Application	Torque(Nm)	Notes
Cam cover to cylinder head	10	
Cam chain tensioner to crankcase	9	
Cam chain tensioner guide to crankcase	18	Fit a new bolt if removed
Camshaft bearing caps to head	See text	
Camshaft sprocket to camshaft	15	Fit a new bolt if removed
Cylinder head bolts	See text	
Spark plug	12	
Cylinder head sound suppression bolt	10	

Crankshaft

Application	Torque(Nm)	Notes
Connecting rod big ends	See text	
Centrifugal breather to crankshaft	30	Fit a new bolt if removed
Crankshaft position sensor wheel to alternator rotor	16	Fit a new bolt if removed

Clutch

Application	Torque(Nm)	Notes
Clutch cover to crankcase	9	
Clutch cover sound suppression plate to cover	9	
Clutch centre nut	98	
Clutch push plate to centre	9	
...tch lever pivot locknut	6	
Clutch lever clamp bolts	15	

Engine Covers

Application	Torque(Nm)	Notes
Sprocket cover to crankcase	9	
Alternator cover to crankcase	9	
Breather cover to crankcase	9	
Water inlet elbow to crankcase	9	
Water outlet connection - cylinder head	9	

Transmission

Application	Torque(Nm)	Notes
Output sprocket to output shaft	132	Use Threebond 1374 to the nut threads.
Detent wheel to selector drum	12	Fit a new bolt if removed
Detent arm capscrew	12	Fit a new bolt if removed
Selector drum bearing retaining screw	12	Fit a new bolt if removed
Selector shaft retainer	12	Fit a new bolt if removed
Spring abutment bolt	28	

Lubrication System

Application	Torque(Nm)	Notes
Sump to crankcase - M6 x 25	12	
Sump to crankcase - flanged head	9	
Sump drain plug	25	
Low oil pressure warning light switch to crankcase	28	
Heat exchanger to crankcase	65	
Oil filter to adapter	10	
Oil feed pipe to cylinder head	25	
Oil pump to crankcase	13.7.	
Oil pump gear to oil pump	15	

Wheels

Application	Torque(Nm)	Notes
Front wheel spindle/axle bolt	65	
Front fork pinch bolts	20	
Rear wheel nut	110	

Cooling System

Application	Torque(Nm)	Notes
Water pump to crankcase	9	
Radiator to frame	6	
Water elbow to cylinder head	9	
Coolant drain plug	13	
Cooling fan to radiator	2.5	
Coolant bleed screw	3	

Fuel System, Airbox and Exhaust

Application	Torque(Nm)	Notes
Fuel tank to frame	9	
Fuel pump mounting plate to fuel tank	5	
Fuel pump clamp screw	4	
Throttle body transition piece to cylinder head	12	
Fuel feed/return pipe connections to fuel rail	6	
Fuel rail to throttle bodies	12	
Exhaust header to cylinder head	See text	
Exhaust mounting brackets to frame	15	
Exhaust silencer to header	22	
Air filter housing to airbox	5	

Rear Suspension

Application	Torque(Nm)	Notes
Swinging arm spindle	110	
Rear suspension unit upper mounting	48	
Rear suspension unit lower mounting	48	
Drop link to drag link	48	
Drop link to swinging arm	48	
Drag link pivot at frame	48	
Chain tension adjuster locknut	27	
Brake hose 'P' clip fixings	7	

Front Suspension

Application	Torque(Nm)	Notes
Upper yoke pinch bolt	20	
Lower yoke pinch bolt	20	
Fork top cap to inner tube	23	
Upper yoke centre nut	90	
Headstock bearing adjuster locknut	40	
Damping cylinder bolt in base of fork	43	
Handlebar clamp screw	27	
Handlebar to upper yoke screw	11	
Handlebar end weight screw	5	
Switch cubes/cable guides to handlebars	4	

Brakes

Application	Torque(Nm)	Notes
Front brake caliper to fork	40	
Front brake hose to caliper	25	
Front brake master cylinder reservoir to bracket	9	
Front brake hose to master cylinder	25	
Front brake disc to wheel	22	Fit a new bolt
Rear brake caliper to carrier - M8 bolt	24	
Rear brake caliper to carrier - M12 bolt	29	
Rear brake hose to caliper	25	
Rear brake master cylinder to frame	27	
Rear brake master cylinder reservoir	7	
Rear brake hose to master cylinder	25	
Rear brake disc to wheel	22	Fit a new bolt

Final Drive

Application	Torque(Nm)	Notes
Rear sprocket to cush drive	55	
Chain guard to swinging arm	5	
Sprocket carrier stud to sprocket carrier	30	

Footrests, Control Plates and Engine Mountings

Application	Torque(Nm)	Notes
Upper crankcase to frame	See text	
Lower crankcase to frame	See text	
Cylinder head to frame	See text	
Control plate to frame	27	
Rear footrest hanger to frame	27	
Side stand mounting bracket	45	
Side stand pivot bolt	20	
Seat subframe to main frame	48	

Electrical

Application	Torque(Nm)	Notes
Alternator to crankshaft	120	
Starter motor to crankcase	10	
Side stand switch to bracket	7	
Instruments to subframe	2	

Bodywork

Application	Torque(Nm)	Notes
Front mudguard to fork	3	
Side panels to frame (TT600)	3	
Side panel to bracket (TT600)	9	
Cockpit to brackets (TT600)	3	
Mirrors to cockpit (TT600)	9	
Nose piece/cockpit to brackets	2	
Intake ducts to frame	6	

INTRODUCTION

This maintenance schedule given overleaf describes the maintenance requirements for the TT600 and Speed Four models.

WARNING: The importance of good maintenance cannot be overestimated. The tasks described will help to ensure the safe and reliable operation of your Triumph motorcycle. Never attempt to cut costs by neglecting the maintenance requirements of your machine as this will result in the premature failure of the component(s) concerned and may lead to an unsafe riding condition and an accident.

Scheduled Maintenance Chart

Scheduled Maintenance Chart

Operation Description	Odometer Reading in Miles (Kms) or time period, whichever comes first.					
	Every	500 (800) 1 month	4000 (6000) 1 year	8000 (12000) 2 years	12000 (18000) 3 years	16000 (24000) 4 years
Engine/oil cooler - check for leaks	Day	●	●	●	●	●
Engine oil - renew	-	●	●	●	●	●
Engine oil filter - renew	-	●	●	●	●	●
Valve clearances - check/adjust	-			●		●
Cam chain - wear check	-					●
Air cleaner - renew	-			●		●
Engine ECM - check for stored DTCs	-	●	●	●	●	●
Spark plugs - check	-		●	●		●
Spark plugs - renew	-				●	
Throttle bodies - balance	-			●		●
[illegible] level - check/adjust	-	●	●	●	●	●
Throttle cable - check/adjust	Day	●	●	●	●	●
Cooling system - check for leaks	Day	●	●	●	●	●
Coolant level - check/adjust	Day	●	●	●	●	●
Coolant - renew	Every 2 Years					
Fuel system - check for leaks	Day	●	●	●	●	●
Lights, instruments & electrical systems - check	Day	●	●	●	●	●
Fuel Filter - renew	-			●		●
Steering - check for free operation	Day	●	●	●	●	●
Headstock bearing - check/adjust	-			●		●
Headstock bearing - lubricate	-			●		●
Clutch - check for leaks/smooth operation	Day	●	●	●	●	●

Scheduled Maintenance Chart (continued)						
Operation Description	Odometer Reading in Miles (Kms) or time period, whichever comes first.					
	Every	500 (800) 1 month	4000 (6000) 1 year	8000 (12000) 2 years	12000 (18000) 3 years	16000 (24000) 4 years
Fork oil - renew	-					●
Brake fluid levels - check	Day	●	●	●	●	●
Brake fluid - renew	Every 2 years					
Brake hoses - renew	Every 4 years					
Brake pads - check wear levels	Day	●	●	●	●	●
Brake master cylinder - renew seals	Every 4 years					
Brake calipers - renew seals	Every 4 years					
Drive chain - lubricate	Every 200 miles (300 kms)					
Drive chain - wear check	Every 500 miles (800 kms)					
Drive chain slack - check/adjust	Day	●	●	●	●	●
Drive chain rubbing strip - check	-		●	●		●
Drive chain rubbing strip - renew	-				●	
Rear suspension - lubricate	3 years/12,000 miles (18,000 kms)					
Fasteners - inspect visually for security	Day	●	●	●	●	●
Wheels - inspect for damage	Day	●	●	●	●	●
Tyre wear/tyre damage - check	Day	●	●	●	●	●
Tyre pressures - check/adjust	Day	●	●	●	●	●
Clutch cable - check/adjust	Day	●	●	●	●	●
Fuel/evaporative* hoses - renew	-	Every 4 years				
Secondary air injection system - clean and reset	-			●		●

* Evaporative hoses on California models only

CYLINDER HEAD

CONTENTS

	Page
Exploded View - Cylinder Head and Valves	3.2
Exploded View - Cam Cover	3.3
Exploded View - Camshaft and Camshaft Drive	3.4
Cylinder Head Description	3.5
Cam Cover	3.5
Removal	3.5
Installation	3.6
Cam Chain Tensioner	3.7
Removal	3.7
Installation	3.8
Cam Chain Inspection	3.9
Camshafts	3.10
Removal	3.10
Inspection	3.11
Installation	3.12
Valve Clearance Measurement	3.14
Valve clearances	3.14
Valve clearance adjustment	3.15
Cylinder Head	3.16
Removal	3.16
Inspection	3.21
Installation	3.21
Valves	3.27

Exploded View

Cylinder Head and Valves

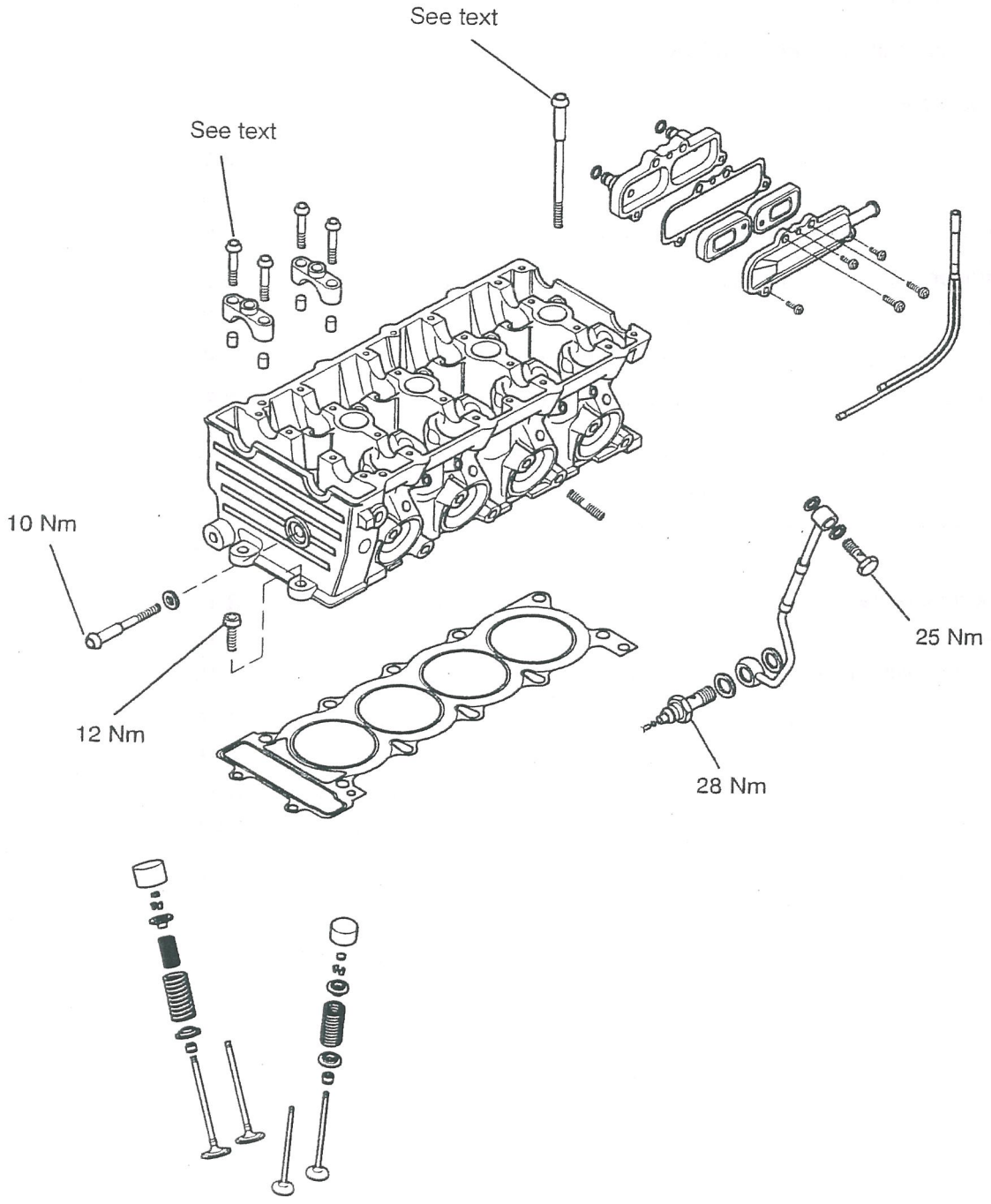

Exploded View

Cam Cover

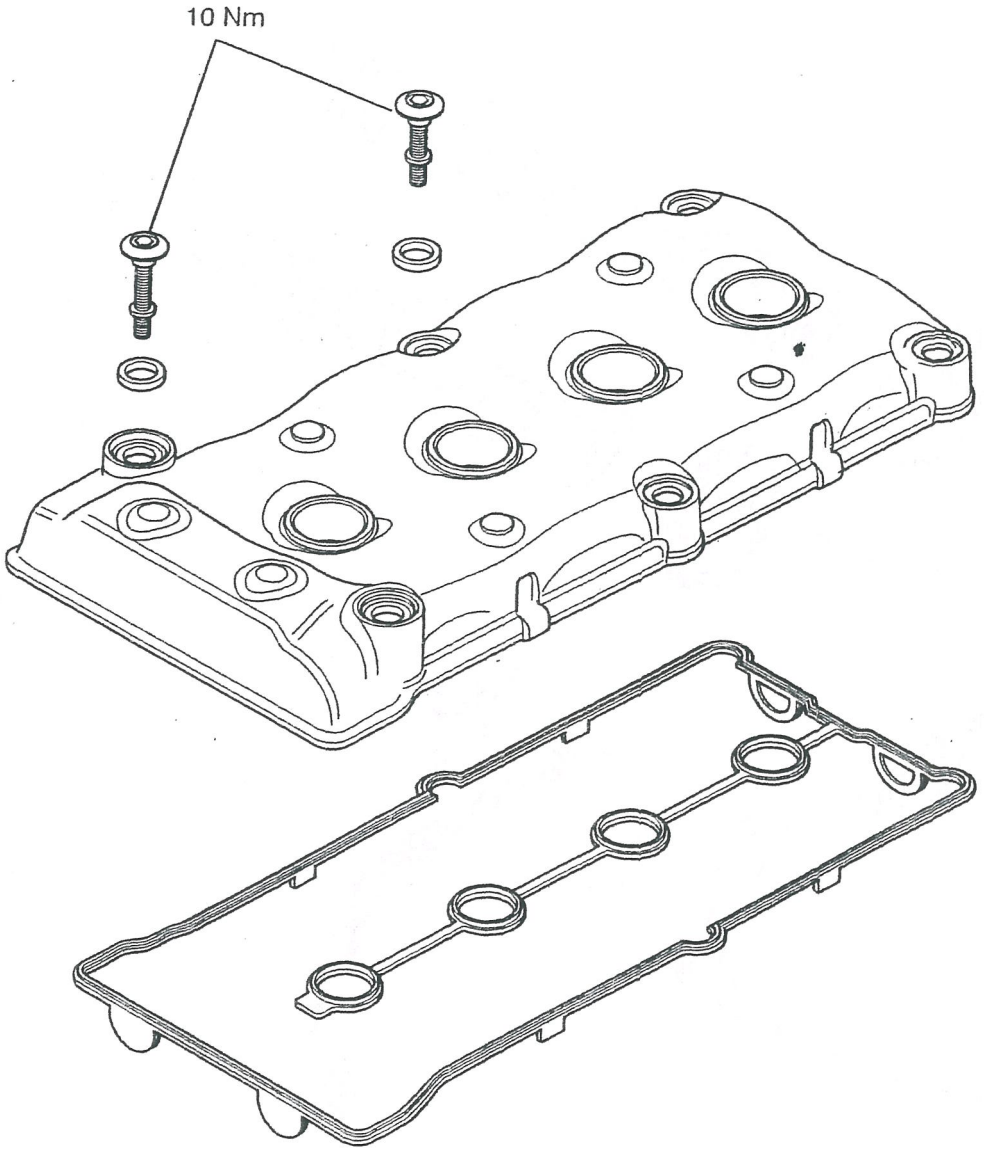

Exploded View

Camshaft and Camshaft Drive

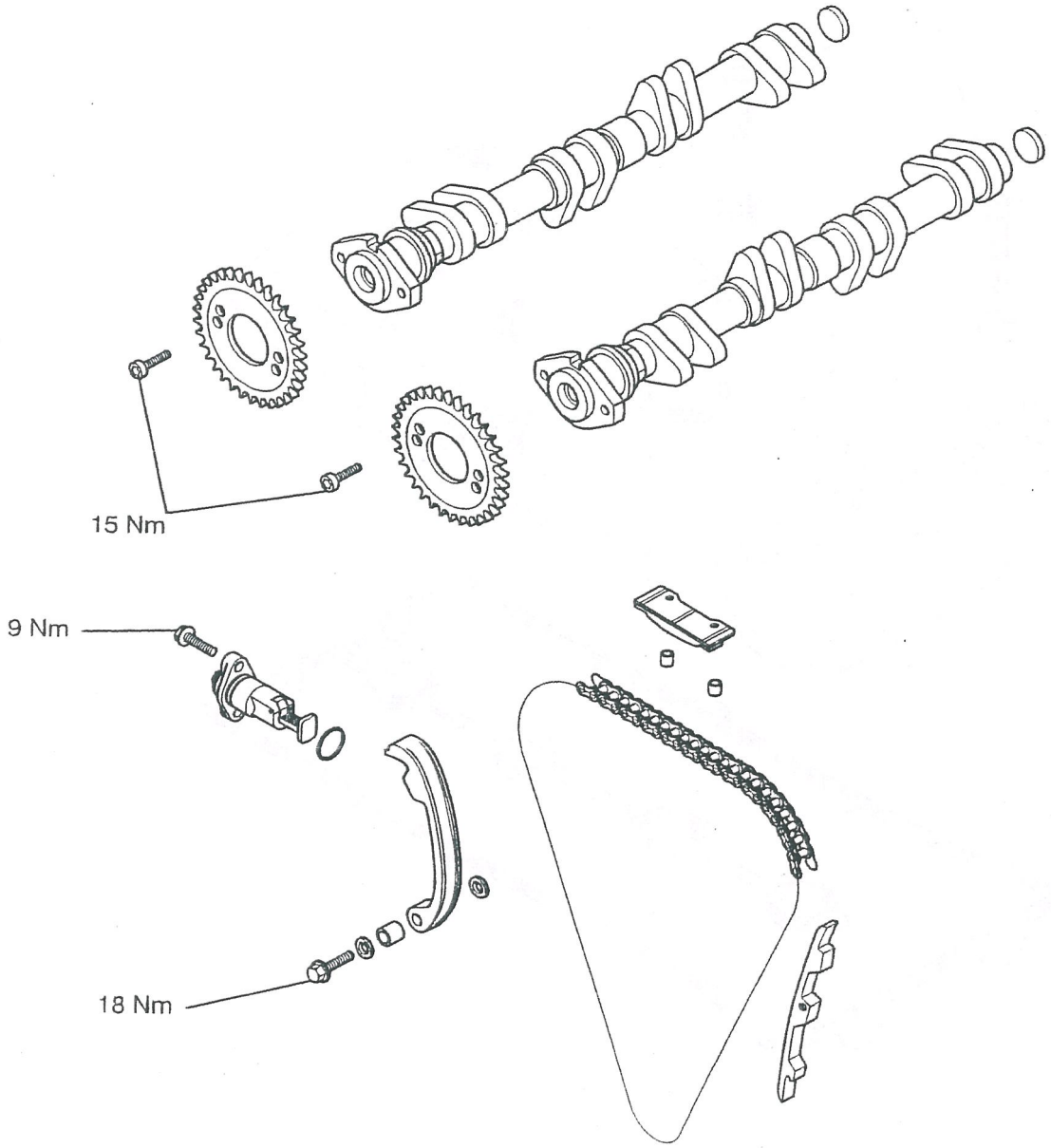

CYLINDER HEAD DESCRIPTION

The engine is fitted with an aluminum alloy cylinder head which carries the camshaft, valves and spark plugs. The cylinder head is cast as a single entity and various components are permanently added after machining.

The camshafts run directly in the cylinder head without additional bearings. Valve clearances are adjusted by changing variable thickness shims which sit between the valve and valve tappet. The camshafts are driven by a silent-type cam chain. The chain is tensioned by a spring loaded device fitted in the upper crankcase half, and is guided by two rubber blades.

Oil is supplied to the cylinder head by an external feed pipe. Once the oil is supplied to the cylinder head, the oil is distributed along internal drillings within the cylinder head casting and camshafts.

The inlet valves are fitted with dual valve springs, the exhaust with single springs. All valve springs have close wound coils at one end to help prevent valve surge. When assembling the cylinder head it is important that the close wound, colour coded ends of the springs are fitted facing downwards (towards the piston).

Both the tip and seating face of the valves are hardened to give a long service life. Due to methods used in assembly, the valve seats and valve guides cannot be replaced.

CAUTION: In any of the following procedures which necessitate the removal or disconnection of the camshaft chain, NEVER turn the engine without the camshaft chain and tensioner correctly fitted and adjusted. In the disassembled condition, the pistons will contact the valves if the crankshaft is turned, causing severe engine damage.

CAM COVER

Removal

NOTE:

- **The cam cover may be detached after first removing the seat and disconnecting the battery negative (black) lead first. The fuel tank, airbox and both lower fairings must also be removed. Refer to the relevant sections for removal procedures.**

1. Release the radiator top and bottom mounting bolts and move the radiator off the left hand top mounting dowel, away from the engine.

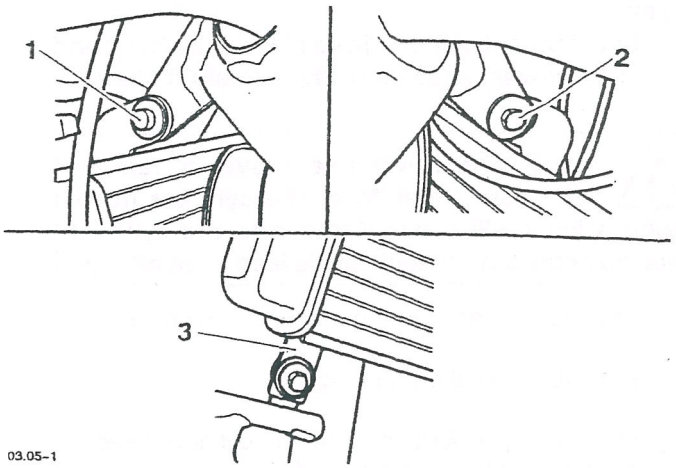

03.05-1

1. Radiator to frame locating dowel

2. Top mount bolt

3. Lower bracket (1 of 2)

2. Disconnect the electrical connections to the ignition coils and remove the coils from the cam cover.

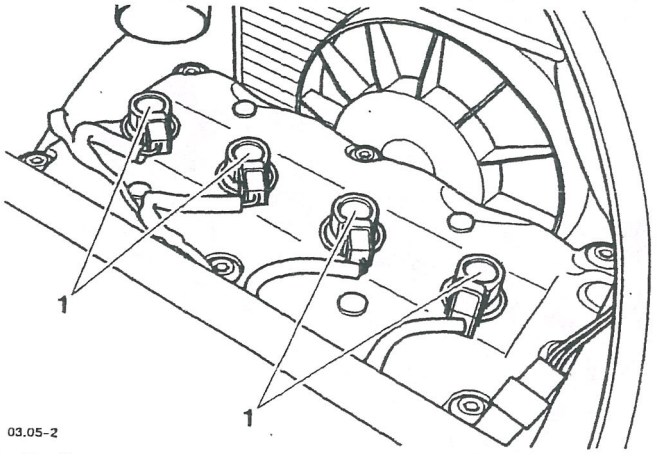

03.05-2

1. Coils

3. Release the cam cover bolts.

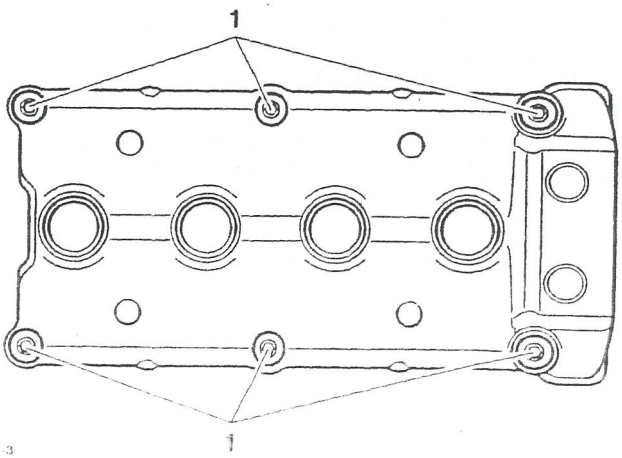

03.05-3

1. Cam cover bolts

NOTE:

- **Two, longer bolts are fitted at the right hand end of the cover, adjacent to the camshaft chain.**

CAUTION: Never use a lever to remove the cam cover from the cylinder head. Using a lever will cause damage to the cylinder head and cam cover which could lead to an oil leak.

4. Remove the cam cover bolts and cam cover.
5. Remove the seal from the cover.
6. Remove any residual oil from the cylinder head using a syringe or a lint free cloth.

Installation

1. Check the condition of the cam cover seal and cam cover bolt seals. Replace or refit as necessary.
2. Apply silicone sealant to the four 'D' sections of the cam cover seal.

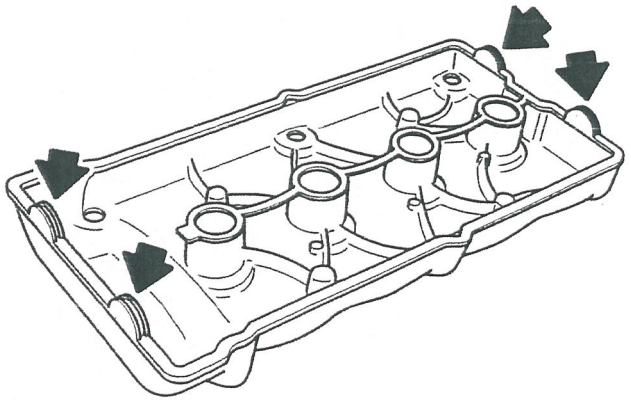

03.06-1

Arrowed: Silicone sealant areas

3. Fit the cam cover to the cylinder head. Ensure that the seal remains in position, paying particular attention to the spark plug tower areas.
4. Fit the cam cover bolts, complete with their seals (steel ring side facing upwards) and tighten to finger tight.
5. Progressively tighten the camshaft cover bolts to **10 Nm.**

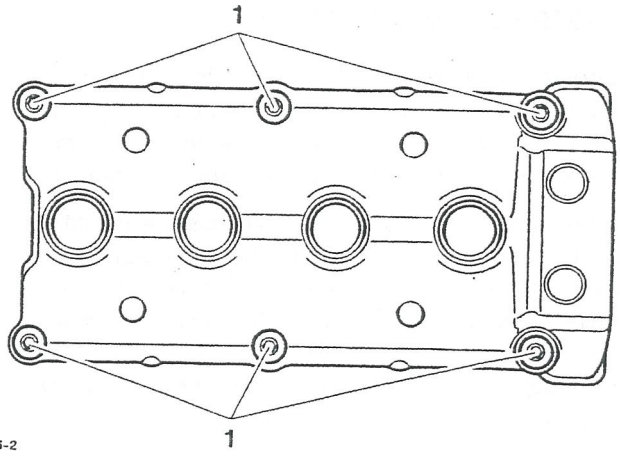

03.06-2

1. Cam cover bolts

6. Refit and connect the ignition coils.
7. Refit the airbox and fuel tank as described in the fuel system section.
8. Reconnect the battery positive (red) lead first.
9. Refit the seat.

CAM CHAIN TENSIONER

Removal

NOTE:

- **The cam chain tensioner may be removed after first removing the camshaft cover and breather cover. Refer to the relevant sections for removal procedure of each item.**

1. Rotate the crankshaft clockwise until No. 1 cylinder is at TDC.

NOTE:

- **No. 1 cylinder is at TDC when the arrow marked 1/4TDC on the centrifugal breather is horizontal, facing to the right and in line with the crankcase split line.**

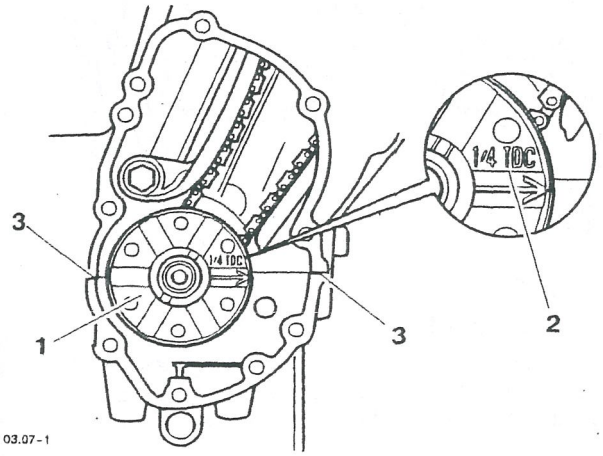

1. **Centrifugal breather**
2. **1/4 TDC mark**
3. **Crankcase split line**

NOTE:

- **In addition, timing marks on the camshaft sprockets will point inwards at a point level with the cylinder head.**

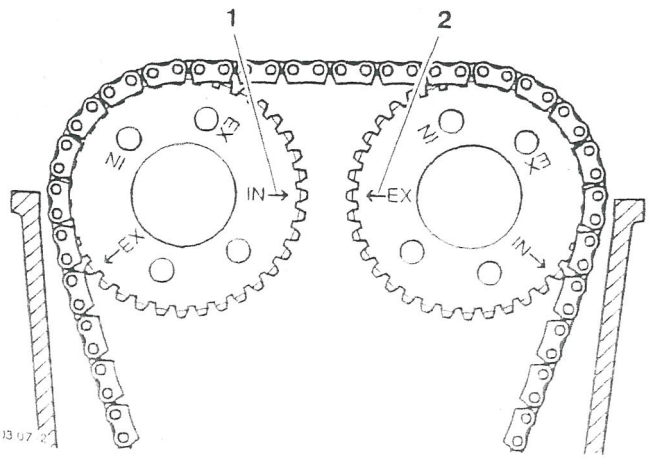

1. Inlet timing mark
2. Exhaust timing mark

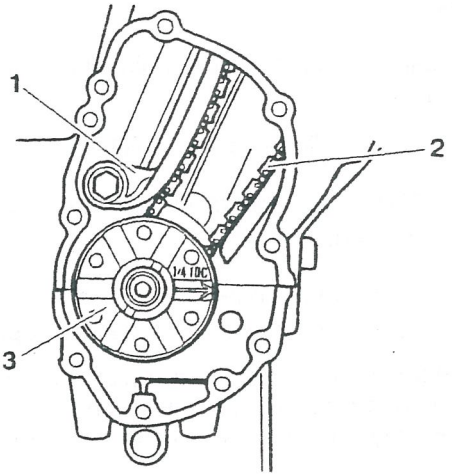

1. **Cam chain tensioner blade**
2. **Cam chain**
3. **Centrifugal breather**

WARNING: The cam chain tensioner center nut is under spring tension. Always wear hand, eye and face protection when withdrawing the center nut. Take great care to minimise the risk of personnel injury and loss of components.

2. Remove the center nut and washer from the cam chain tensioner and withdraw the cam chain tensioner spring and plunger.

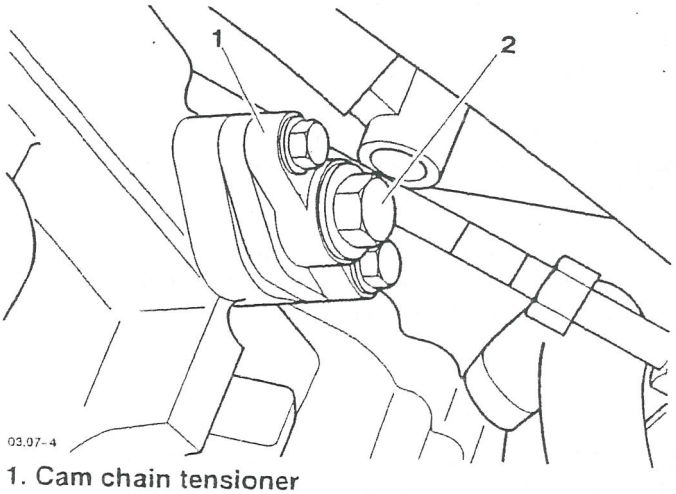

1. **Cam chain tensioner**
2. **Center nut**

3. Remove the bolts securing the cam chain tensioner to the crankcase.

4. Remove the cam chain tensioner.

Installation

Before installation of the cam chain tensioner, check the following:

- No. 1 cylinder is still at TDC.
- The timing marks on the camshafts are still aligned.
- The cam chain tensioner 'O' ring is not worn or damaged. If worn or damaged, replace.

1. Set the cam chain tensioner plunger onto the first tooth of the ratchet (i.e. minimum extension) by manually lifting the cam chain tensioner pawl.

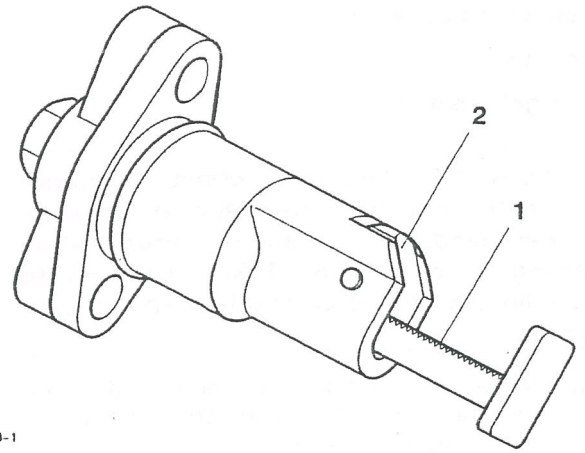

03.08-1

1. Cam chain tensioner ratchet

2. Pawl

2. Fit the 'O' ring to the tensioner body.
3. Fit the cam chain tensioner to the crankcase (ratchet facing upwards) and tighten the bolts to **10 Nm.**
4. Fit the spring and plunger into the cam chain tensioner and, using finger pressure only, push the tensioner into contact with the tensioner blade.

WARNING: The cam chain tensioner center nut is under spring tension. Always wear hand, eye and face protection when refitting the center nut. Take great care to minimise the risk of personnel injury and loss of components.

5. Fit the center nut and washer to the cam chain tensioner. Torque the nut to **23 Nm.**
6. Check that the cam chain tensioner is correctly seated in the middle of cam chain tensioner blade, when viewed from above.

NOTE:

- **No. 1 cylinder is at TDC when the arrow marked 1/4TDC on the centrifugal breather is horizontal, facing to the right and in line with the crankcase split line.**

7. Rotate the engine through 4 complete revolutions and reset number 1 cylinder to TDC.
8. Check that the camshaft timing marks point inwards at a point level with the cylinder head. Rectify if necessary.

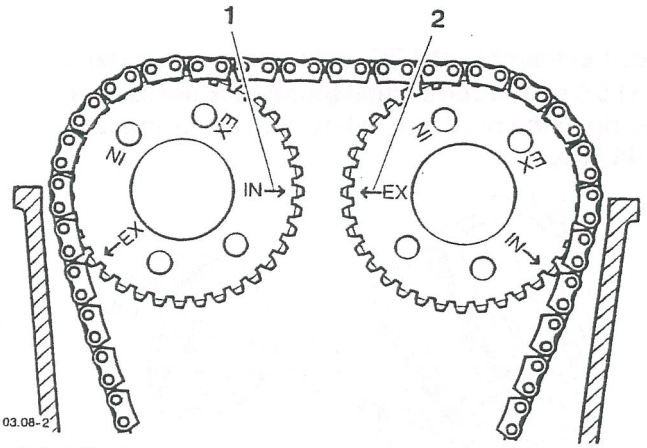

03.08-2

1. Inlet timing mark

2. Exhaust timing mark

9. If the tensioner location and cam timing have both been checked and are correct, refit the cam cover and breather cover as described elsewhere in this manual.
10. Refit the airbox and fuel tank as described in the fuel section.
11. Reconnect the battery, positive (red) lead first.
12. Refit the seat.

CAM CHAIN

Inspection

Visual in-situ checks can also be made as follows:

1. Check for significant blue discolouration of the chain plates indicating excessive heat build-up.
2. Examine all pins for signs of rotation.
3. Check for cracking or deep scratching of the chain plates.
4. Check for severe wear of the inner plates as indicated in the diagram below.

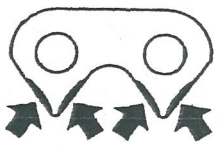

For a more thorough check, proceed as follows:

1. Remove the chain from the engine.
2. Suspend the chain from a pin or hook with a 13kg weight attached at the lower end.

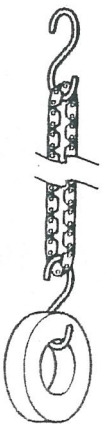

caju

3. Measure across 23 links as shown in the diagram. If the chain is within limits, the measurement should be no longer than 147.63 mm. Measurements beyond 147.63 mm indicate that the chain must be replaced.

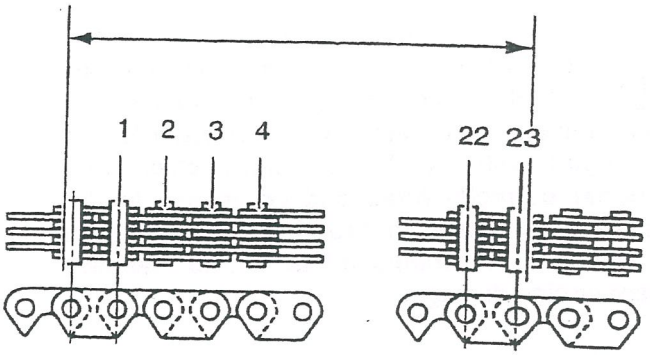

caji

5. Check for severe wear of the inner surface of the outer plates at the side-contact points with the sprocket teeth.

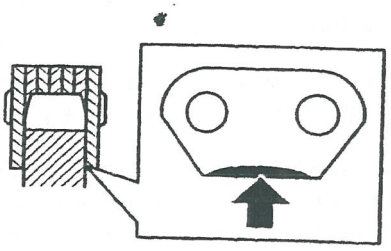

6. Check for signs of stiffness or kinking.
7. Check for severe wear of the plates in the area shown below.

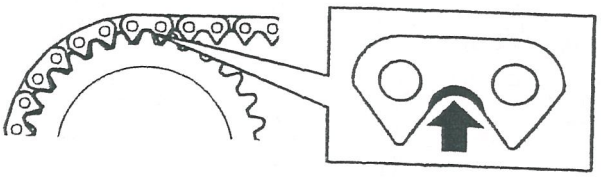

caju

If any of these symptoms are evident, the cam chain must be replaced.

CAMSHAFTS

CAUTION: In following procedures, which necessitates the removal or disconnection of the camshaft chain, NEVER turn the engine without the camshaft chain and tensioner correctly fitted and adjusted. In the disassembled condition, the pistons will contact the valves if the crankshaft is turned, causing severe engine damage.

Removal

NOTE:

- **The camshafts can be removed from the cylinder head without the complete removal of the cam chain. However, the chain must first be detached from the camshafts. Refer to other parts of this section for details.**
- **The camshafts and sprockets are removed as an assembly with number 1 cylinder at TDC.**
- **No. 1 cylinder is at TDC when the arrow marked 1/4TDC on the centrifugal breather is horizontal, facing to the right and in line with the crankcase split line.**

1. Remove the cam cover as described earlier in this section.
2. Remove the cam chain tensioner as described earlier in this section.
3. Remove the cam chain top pad.

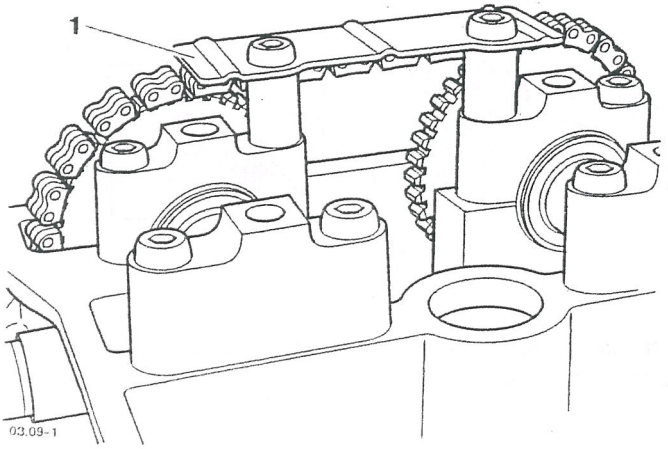

1. Top pad

NOTE:

- The camshaft caps are numbered sequentially and must not be interchanged. The camshaft caps at the sprocket end of the camshafts are marked 'A' (Exhaust) and 'B' (Inlet).

4. Mark the camshaft caps in relation to the cylinder head prior to removal.

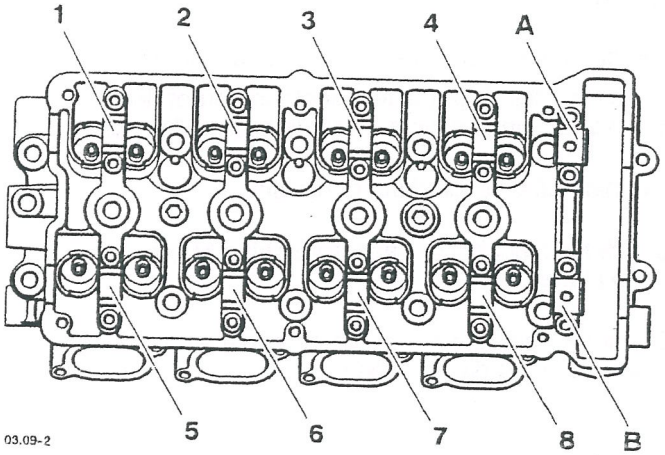

Camshaft cap numbering

CAUTION: Progressively release all the camshaft caps from ONE camshaft before removal. If both camshafts are progressively released at the same time the valves may contact each other and cause damage to the cylinder head valve face areas and valve stems.

CAUTION: Never completely release one camshaft cap in isolation from the others. This could cause some of the camshaft caps to crack.

5. Progressively release each of the bolts securing the camshaft caps of **ONE** camshaft, in the sequence shown below:

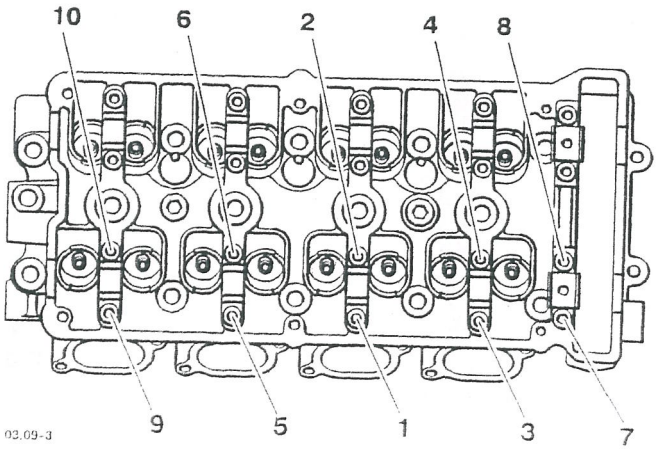

Cap bolt release sequence

6. Repeat for the second camshaft.

NOTE:

- **The camshaft caps are doweled. If they cannot be removed with hand pressure, gently strike each one with a soft face mallet to release them.**

7. Once the tension on all the camshaft caps has been released, remove the bolts and the camshaft caps.

NOTE:

- **Secure the cam chain to ensure that it does not fall into the crankcase during the removal of the camshafts.**

8. Lift the cam chain from one camshaft and withdraw the camshaft from the cylinder head. Repeat for the second camshaft.

Inspection

CAUTION: The same sprockets are used for both camshafts. To attach the sprocket to different camshafts, different bolt holes are used. Never fit a camshaft sprocket to a camshaft using incorrectly identified bolt holes. Severe engine damage will result from incorrect attachment.

NOTE:

- **The sprockets bolt holes are offset to ensure correct fitting to the camshaft.**

1. Inspect the camshaft sprockets for damaged and/or worn teeth. Replace as necessary.

2. Check the diameter of the camshaft journals.

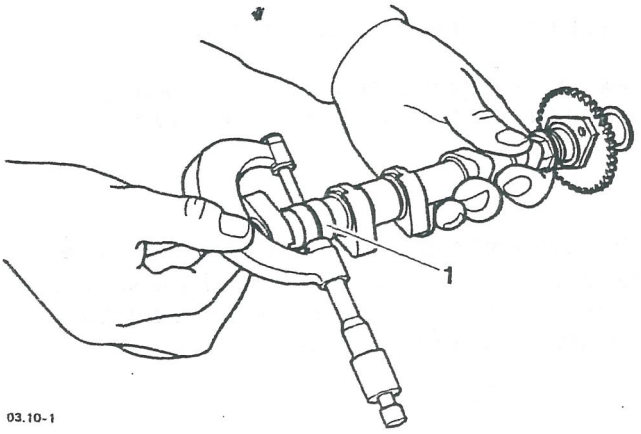

1. Journal diameter

Standard	**23.90-23.93**
Service Limit	**23.87**

- **If any journal is outside specified tolerances, replace the camshaft.**

3. Inspect the camshaft bearing surfaces in the cylinder head and the camshaft caps for wear and/or damage. If wear and/or damage is found replace the cylinder head and camshaft caps.

4. Check camshaft journal to camshaft cap clearance using Plastigauge (Triumph part number 3880150-T0301) as follows:

a. Place a camshaft to the cylinder head (in it's correct position). Ensure that the camshaft sprocket timing marks are positioned as for removal.

CAUTION: Never completely tighten one camshaft cap in isolation from the others. This could cause the camshaft caps to crack.

b. Fit the camshaft caps and, in the sequence shown elsewhere in this section, torque the bolts to **10 Nm.**

c. Release and remove one camshaft cap. Wipe the exposed areas of the camshaft journal and cap.

d. Apply a thin smear of grease to the exposed part of the camshaft journal and a small quantity of silicone release agent to the camshaft cap.

e. Size a piece of Plastigauge to fit across the exposed camshaft journal.

f. Fit the Plastigauge to the exposed camshaft journal using the grease to hold it in place.

g. Refit the camshaft cap and progressively tighten to **10 Nm.**

h. Release and remove the camshaft cap.

j. Using the gauge provided with the Plastigauge kit, measure the width of the now compressed Plastigauge.

NOTE:

- **The camshaft caps are unique to each cylinder head and are not available individually. If a camshaft cap is worn or damaged, the complete cylinder head must be replaced.**

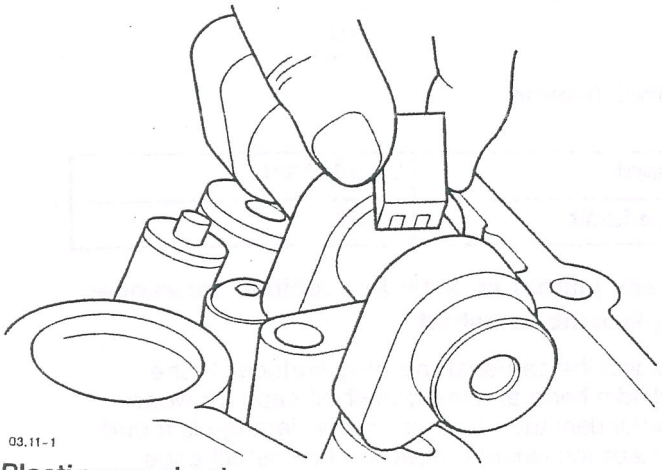

03.11-1

Plastigauge check.

5. Calculate the camshaft journal clearance using the chart provided with the Plastigauge kit.

6. If the camshaft journal to camshaft cap clearance is within the specified tolerances (see table below), remove the remaining camshaft caps (in the correct sequence) and clean off all traces of Plastigage, silicone release agent and grease.

Standard	0.10 mm
Service Limit	0.17 mm

NOTE:

- **If the camshaft journal to camshaft cap clearance is outside the specified tolerances and the camshaft journals are within their specified tolerances, the cylinder head must be replaced.**

Installation

1. Thoroughly clean the camshafts and lubricate the bearing and lobe areas with a 50/50 solution of engine oil and molybdenum disulphide grease.

NOTE:

- **The inlet camshaft can be identified from the exhaust camshaft by a groove on a machined surface. The exhaust camshaft has a machine surface with no groove.**

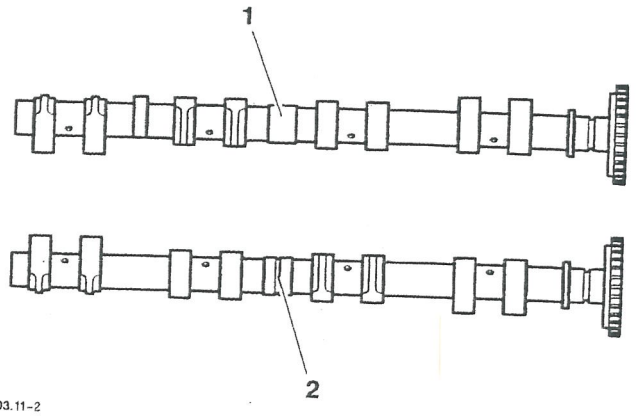

03.11-2

1. Exhaust camshaft (smooth)

2. Inlet camshaft (grooved)

2. Place the camshafts to the cylinder head. Ensure that they are correctly located over their respective valve banks.

3. Working on one camshaft at a time, locate the cam chain over the camshaft sprockets.

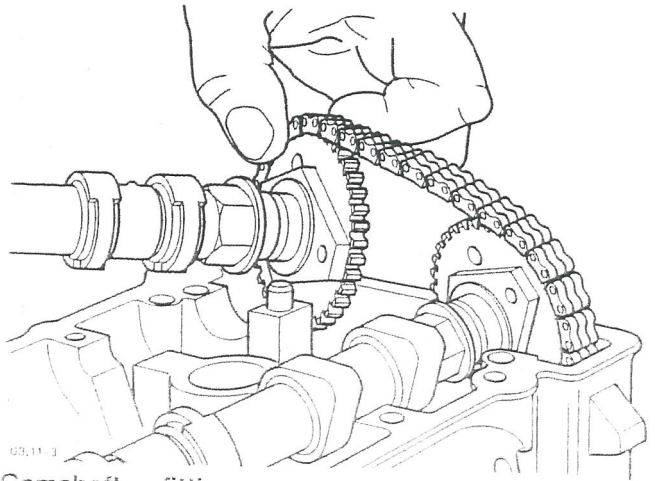

Camshaft refitting

4. Position the timing mark on the camshaft sprockets in the position shown.

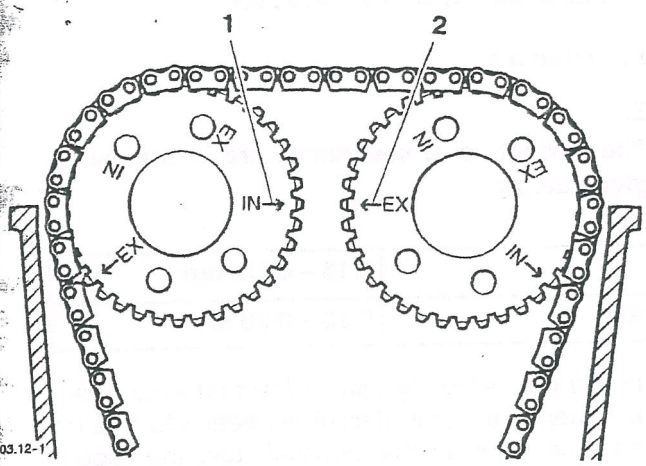

1. **Inlet timing mark**
2. **Exhaust timing mark**

CAUTION: Do not fit the camshaft caps without first aligning the timing marks on the camshaft sprockets and centrifugal breather. If the camshaft caps are fitted without aligning the timing marks, the inlet and exhaust valves may contact each other and cause damage to the valve head areas and valve stems.

CAUTION: Progressively tighten all the camshaft caps from ONE camshaft at a time. If both camshafts are progressively tightened at the same time the valves may contact each other and cause damage to the valve head areas and valve stems.

5. Lubricate the camshaft caps with a 50/50 solution of engine and and molybdenum disulphide grease.

6. Lubricate the cam cap bolt threads with clean engine oil.

7. Check that the camshaft and crankshaft timing marks remain correctly set (crank - 1/4TDC mark horizontal, arrow pointing forward and level with the crankcase split line, camshaft - arrows level with the head and pointing inwards).

NOTE:

- The camshaft caps are numbered sequentially and must not be interchanged.
- The camshaft caps, at the sprocket end of the camshafts are marked, 'A' (Exhaust) and 'B' (Inlet).

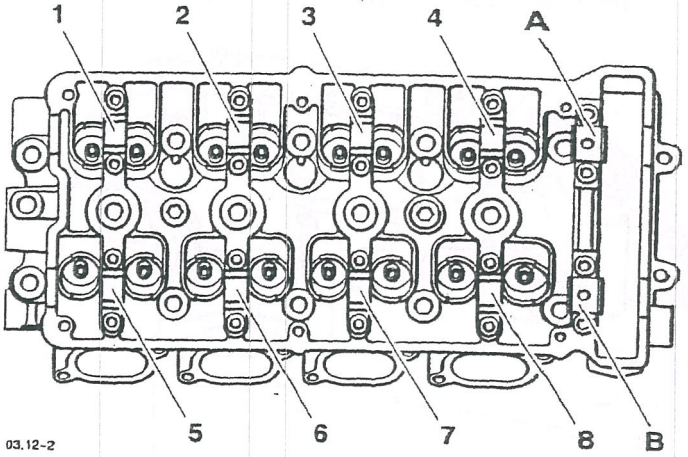

Camshaft cap numbering

8. Fit the camshaft caps and bolts. **Do not tighten the bolts.**

CAUTION: Never completely tighten one camshaft cap in isolation from the other others. This could cause the camshaft caps to crack.

9. In the order shown below, progressively tighten the bolts securing the camshaft caps of **ONE** camshaft until full thread engagement is achieved. Finally, again in the order shown below, torque to **10 Nm.**

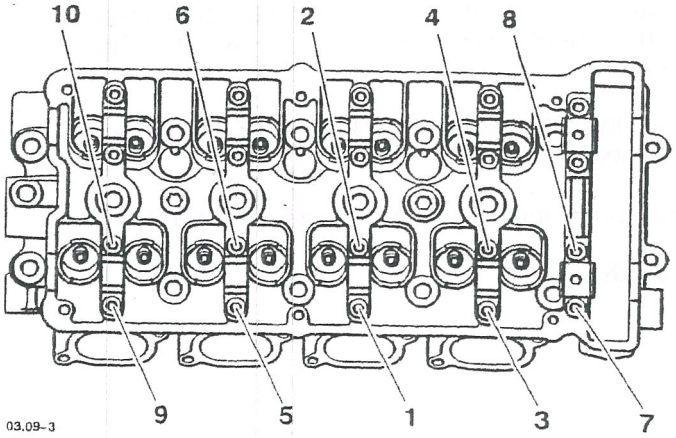

Cap tightening sequence

10. Repeat step 9 for the second camshaft.

CAUTION: Do not rotate the camshafts more than 5°. If the camshafts are rotated more than 5° the valves may contact the pistons and cause damage to the piston, valve head areas and valve stems.

11. Rotate the camshafts through 5°. Ensure free rotation.

12. Fit the top pad (rubber side to the cam chain) and tighten the bolts to **10 Nm**.

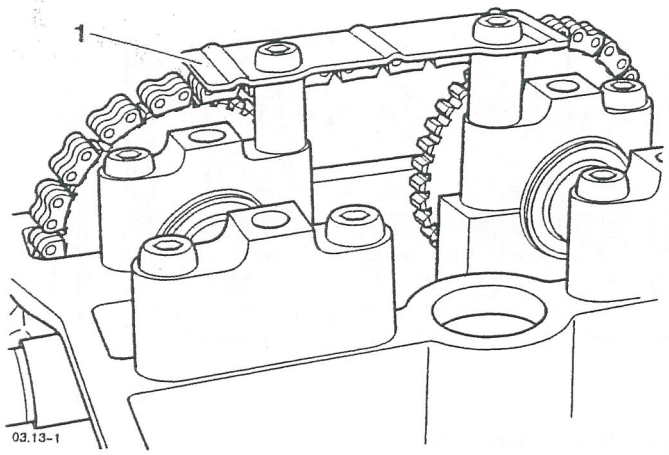

1. Top pad

13. Assemble the cam chain tensioner as described earlier in this section.

> ⚠ **CAUTION: If any components have been renewed, the valve clearances must be checked and adjusted. Running with incorrectly adjusted valve clearances may cause excess engine noise, rough running and engine damage.**

14. Check valve clearances. Adjust as necessary.

15. If the tensioner location and cam timing have both been checked and are correct, refit the cam cover and breather cover as described elsewhere in this manual.

16. Refit the airbox and fuel tank as described in the fuel section.

17. Reconnect the battery, positive (red) lead first.

18. Refit the seat.

VALVE CLEARANCE MEASUREMENT

Valve Clearances

NOTE:

- **The correct valve clearances are in the range given below:**

Inlet	**0.15 – 0.25 mm**
Exhaust	**0.20 – 0.30 mm**

Camshaft, valve, valve shim and valve seat wear affect the valve clearances. The effect of this wear is to change the clearance between the camshaft and the tappet bucket, causing engine noise and improper running. If the valve clearances become too small, permanent damage to the valve and valve seat will take place. If the valve clearance becomes too great, the engine will become noisy and will not run correctly.

NOTE:

- **Valve clearance adjustment must be carried out with the engine cold.**

1. Remove the camshaft cover as previously described in this section.

2. Remove the spark plugs to reduce compression resistance when turning the engine.

3. Select a high gear and, using the rear wheel, turn the engine over until a pair of camshaft lobes are positioned pointing away from the valves.

4. Using feeler gauges, measure and record the clearances for this pair of valves only.

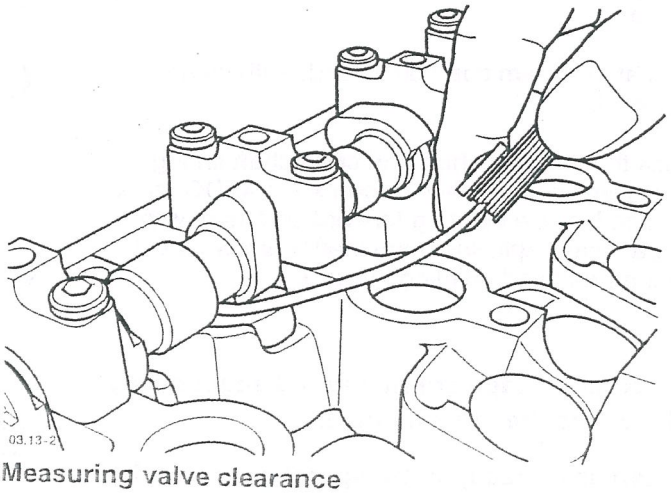

Measuring valve clearance

5. Repeat the process until the clearance for all valves have been checked.

NOTE:

- **If the measurements taken do not fall within the specified tolerances, shim adjustment must be made.**

> ⚠ **CAUTION: If valve clearances are not checked and, if necessary, corrected, wear could cause some of the valves to remain partly open. This will lower performance, burn valves and valve seats and may cause severe engine damage.**

6. Record the measured valve clearance on a chart.

Valve clearance adjustment

NOTE:

- **To adjust the valve clearances the camshafts must be removed (exhaust valve adjustments - remove the exhaust camshaft, inlet valve adjustments - remove the inlet camshaft). Follow the camshaft removal procedure described earlier in this section.**

1. Remove the relevant camshaft, using the procedure described earlier in this section.
2. Remove the tappet bucket from the cylinder head.



1. Tappet bucket

NOTE:

- **The original shim may withdraw with the tappet bucket.**

3. Remove the existing shim from the valve head.

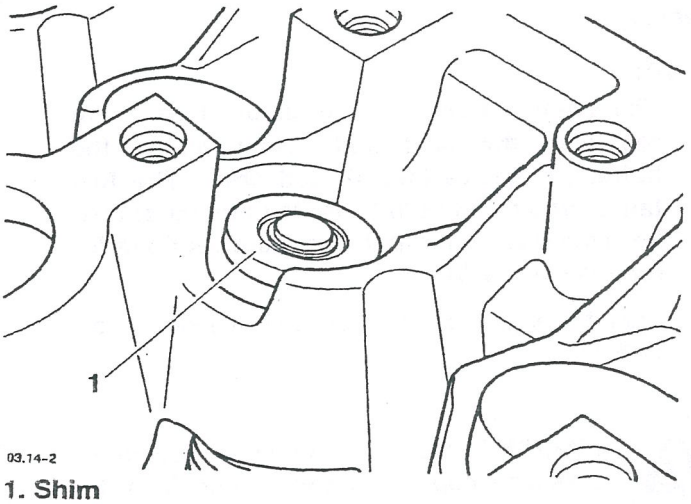

1. Shim

NOTE:

- **The correct valve clearances are in the range given below:**

Inlet	**0.15 – 0.25 mm**
Exhaust	**0.20 – 0.30 mm**

4. Measure the original shim, using a micrometer or vernier and select the appropriate new shim as required.

Clearance too small:

- **If an exhaust valve clearance is less than 0.20 then fit a thinner shim.**

Clearance too large:

- **If an exhaust valve clearance is more than 0.30 then fit a thicker shim.**

NOTE:

- **Shims are available ranging from 1.70 mm to 3.00 mm in increments of 0.025 mm.**

5. Fit the new shim to the valve head.
6. Lubricate the tappet bucket(s) with a 50/50 solution of engine oil and molybdenum disulphide grease.
7. Refit the tappet bucket.
8. Refit the camshaft, as described earlier in this section.
9. Re-check all valve clearances.
10. Repeat the procedure if the valves require further adjustment.

CYLINDER HEAD

Removal

NOTE:

- **The cylinder head may be removed after first removing the seat and disconnecting the battery, negative (black) lead first. The fuel tank, airbox and both lower fairings must also be removed. Refer to the relevant sections for removal procedures.**

1. Drain the engine oil as described in the lubrication section.

WARNING: Do not remove the coolant pressure cap when the engine is hot. When the engine is hot the cooling system is hot and also under pressure. Contact with the pressurised coolant will cause scalds and skin damage.

2. Drain the coolant, as described in the cooling section.
3. Disconnect the radiator top hose at the cylinder head.
4. Disconnect the electrical connector from the coolant temperature sensor.

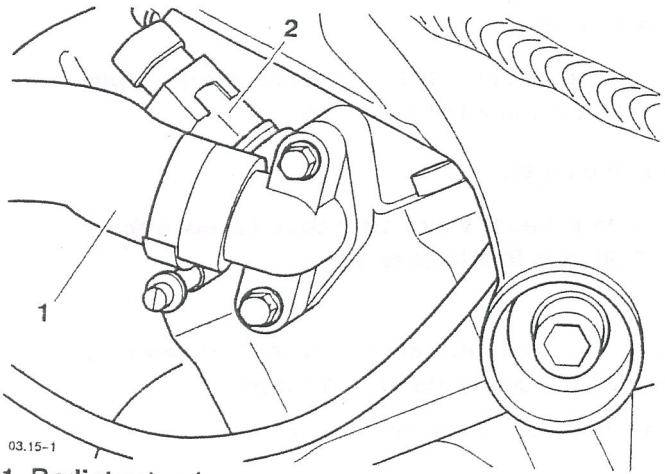

1. Radiator top hose

2. Coolant temperature sensor

5. Disconnect the by-pass hose from the heat exchanger.
6. Disconnect the cooling fan.

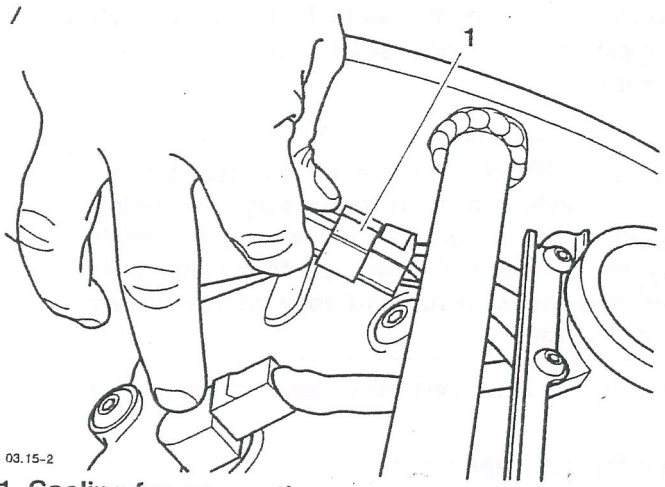

1. Cooling fan connection

7. Undo the radiator top and bottom mounting bolts and move the radiator off the top mounting dowel.

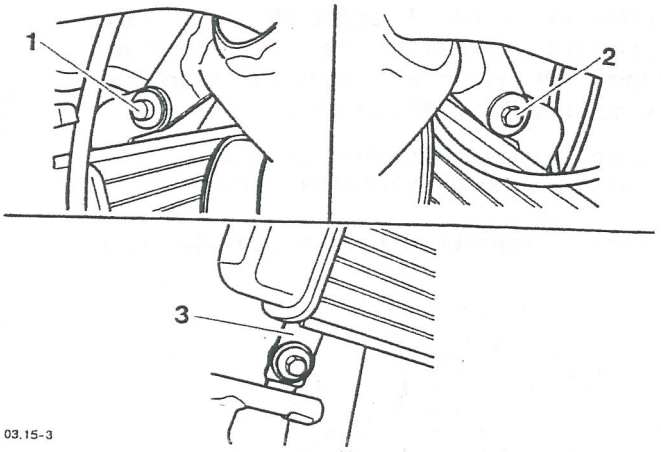

1. Radiator to frame locating dowel

2. Top mount bolt

3. Lower mounting (1 of 2)

8. Place the displaced radiator assembly in a safe place.

9. Remove the exhaust system and silencer as described in the fuel system section.

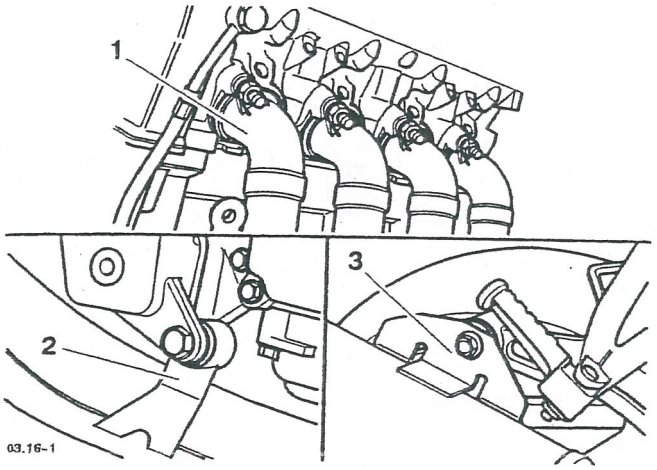

1. **Exhaust header**
2. **Centre mounting**
3. **Rear mounting**

10. Identify and disconnect the air supply pipes to the throttle bodies.

11. Disconnect the multiplugs to the injectors and throttle position sensor.

12. Release the bolts securing the fuel rail to the throttle bodies. Withdraw the fuel rail and injectors.

13. Release the bolts securing the throttle body transition pieces to the cylinder head. Withdraw the throttle bodies and place on the crankcase.

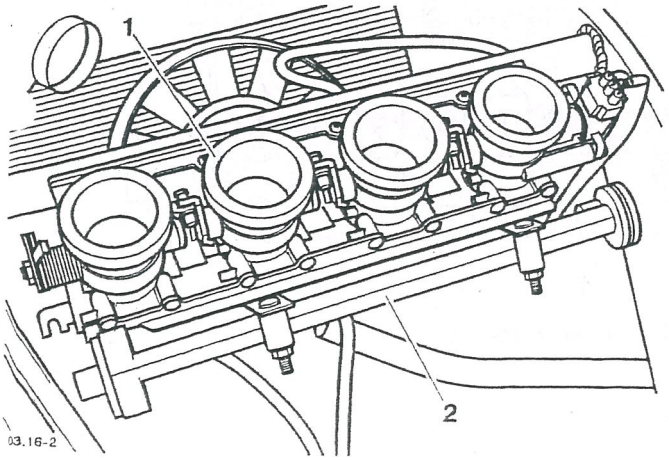

1. Throttle bodies
2. Fuel rail and injectors

NOTE:

- It is not necessary to disconnect the throttle cable from the throttle bodies when removing the cylinder head.

14. Disconnect the electrical connections to the ignition coils and remove the coils from the cam cover.

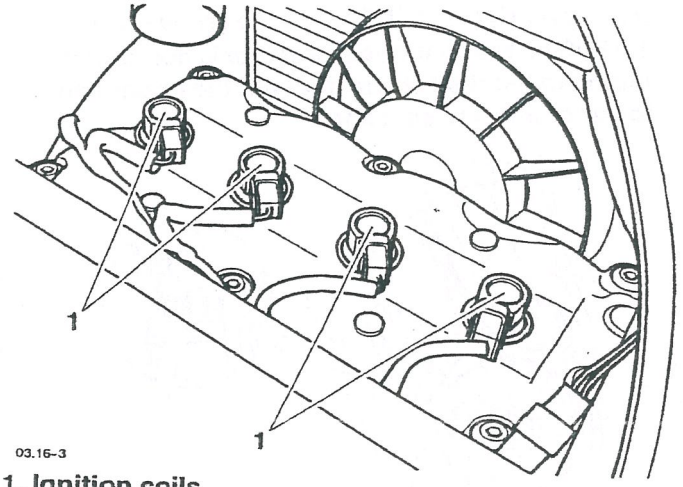

1. **Ignition coils**

15. Progressively release the cam cover bolts.

NOTE:

- **Two, longer bolts are fitted at the right hand end of the camshaft cover adjacent to the camshaft chain.**

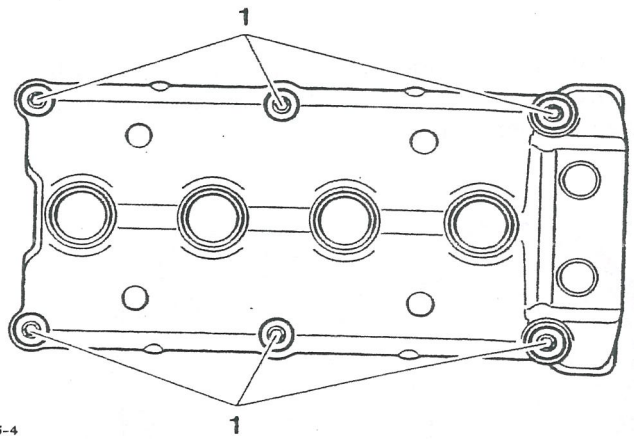

1. **Camshaft cover bolts**

> **CAUTION: Never use a lever to remove the camshaft cover from the cylinder head. Using a lever will cause damage to the cylinder head and camshaft cover which could lead to an oil leak.**

16. Remove the bolts together with the cam cover.

17. Remove any residual oil from the front of the cylinder head using a syringe or a lint free cloth.

18. Remove the breather cover.

19. Check valve clearances as described earlier in this section. Note any incorrect clearances for adjustment on re-assembly.

20. Rotate the crankshaft clockwise until No. 1 cylinder is at TDC.

NOTE:

- **No. 1 cylinder is at TDC when the arrow marked 1/4TDC on the centrifugal breather is horizontal, facing to the right and in line with the upper and lower crankcase split line.**

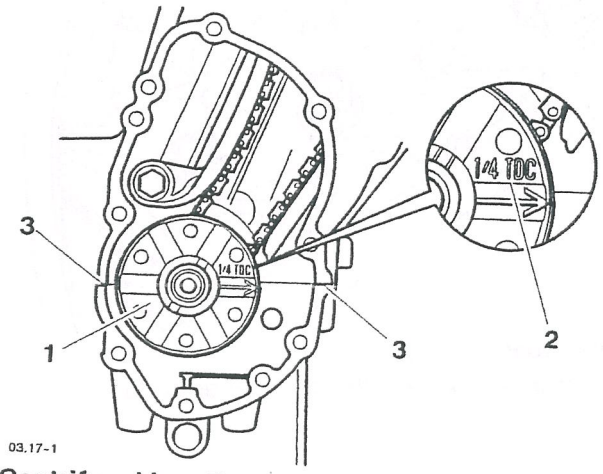

1. Centrifugal breather

2. Timing mark

3. Crankcase split

NOTE:

- **In addition timing marks on the camshaft sprockets will point inwards at a point level with the cylinder head.**

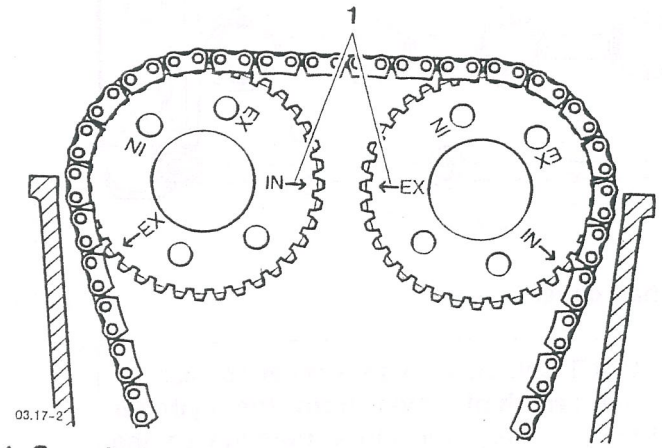

1. Camshaft timing marks

WARNING: The cam chain tensioner center nut is under spring tension. Always wear hand, eye and face protection when withdrawing the center nut. Take great care to minimise the risk of personnel injury and loss of components.

21. Remove the center nut and washer from the cam chain tensioner and withdraw the cam chain tensioner spring and plunger.

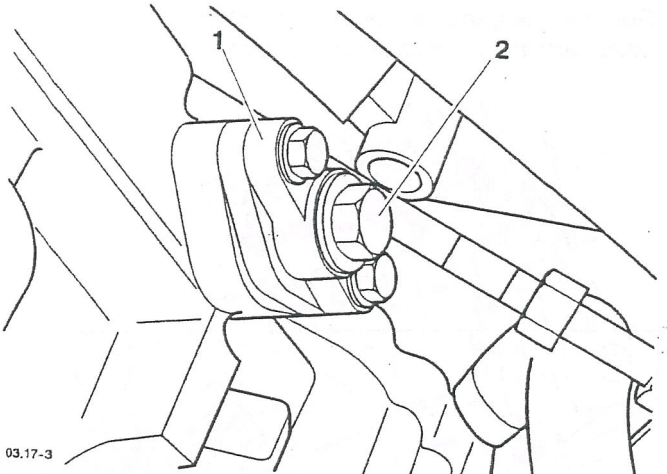

1. Cam chain tensioner

2. Center nut

22. Remove the cam chain tensioner.

23. Remove the cam chain top pad.

NOTE:

- **The camshaft caps are numbered sequentially and must not be interchanged. The camshaft caps at the sprocket end of the camshafts are marked 'A' (Exhaust) and 'B' (Inlet).**

24. Identify the camshaft caps in relation to the cylinder head prior to removal.

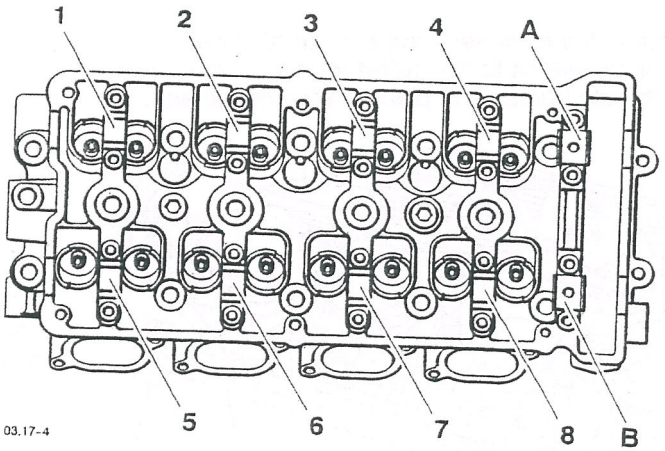

Camshaft Cap Numbering

CAUTION: Progressively release all the camshaft caps from ONE camshaft before removal. If both camshafts are progressively released at the same time the valves may contact each other and cause damage to the valve head areas and valve stems.

CAUTION: Never completely release one camshaft cap in isolation from the others. This could cause some of the camshaft caps to crack.

25. Progressively release each of the bolts securing the camshaft caps of **ONE** camshaft, in the sequence shown below.

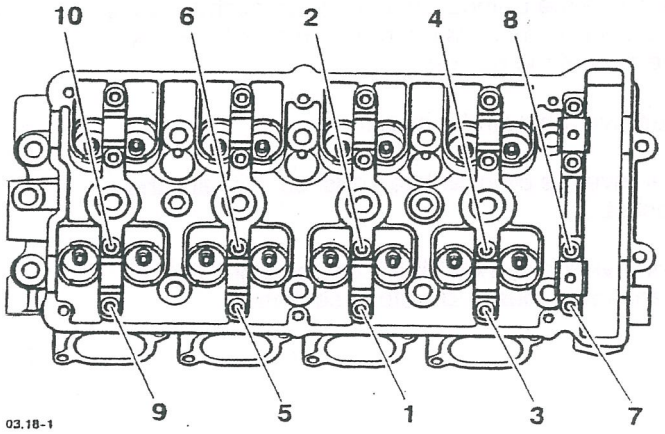

Cap release sequence

NOTE:

- **The camshaft caps are doweled. If they cannot be removed with hand pressure, gently strike each one with a soft face mallet to release them.**

26. Once the tension on all the camshaft caps has been released, remove the bolts and camshaft caps.

27. Repeat for the second camshaft.

NOTE:

- Secure the cam chain to ensure that it does not fall into the crankcase during the removal of the camshafts.

28. Lift the cam chain from one camshaft and withdraw the camshaft from the cylinder head. Repeat for the second camshaft.

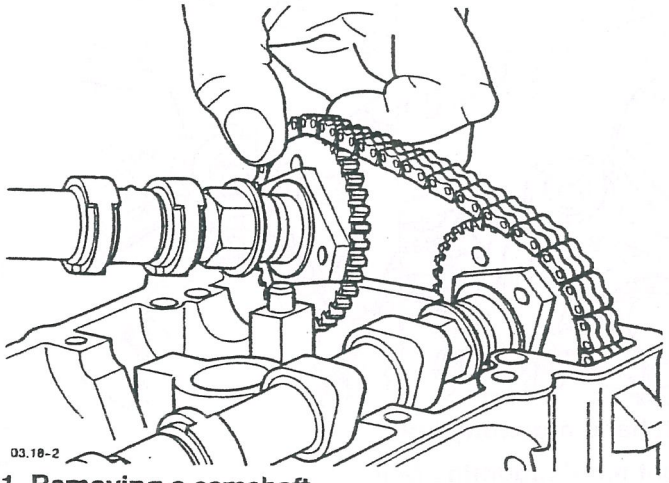

1. Removing a camshaft

29. Remove the banjo bolt securing the oil feed pipe to the cylinder head. Discard the copper washers.

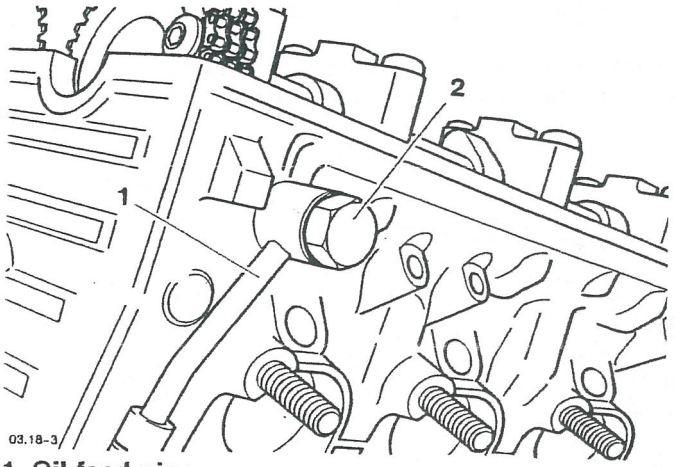

1. Oil feed pipe

2. Banjo bolt

30. Place a support beneath the engine and ensure that the frame is adequately and securely supported.

31. Release and remove the frame to cylinder head mounting bolts on both sides.

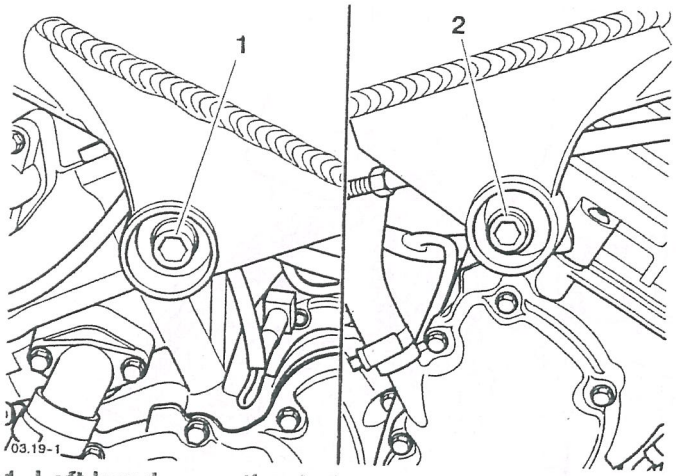

1. Left hand mounting bolt

2. Right hand mounting bolt

32. Release the frame to cylinder head adjuster lockring, on the right hand side of the engine, using service tool T3880380.

33. Release the frame to cylinder head adjuster.

34. Release the bolts securing the outside of the cylinder head to the upper crankcase.

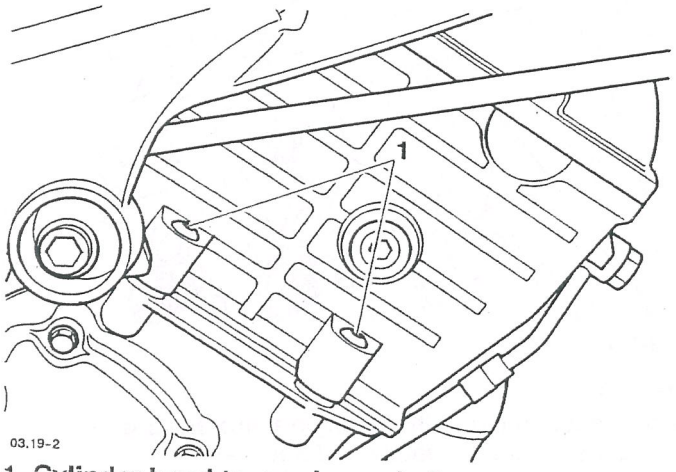

1. Cylinder head to crankcase bolts

35. Progressively release the cylinder head bolts in the order shown below:

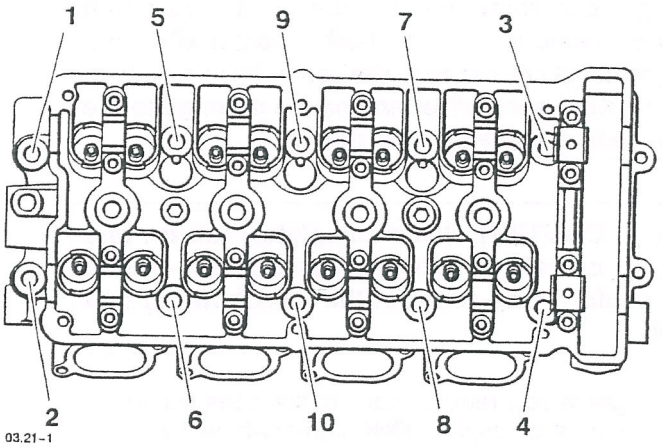

1. Bolt release sequence

36. Remove the cylinder head bolts and lightly strike the cylinder head with a rubber mallet to break the seal of the gasket.

37. Remove the cylinder head.

38. Remove the cylinder head gasket. Discard the gasket.

39. Remove the cylinder liners as described in the crankshaft, rods and pistons section.

Inspection

1. Thoroughly clean the surface of the cylinder head and check for damage and/or pitting of the combustion chambers.

2. Using a straight edge, check the cylinder head gasket face for warp which could lead to gasket failure. Replace the cylinder head if warped.

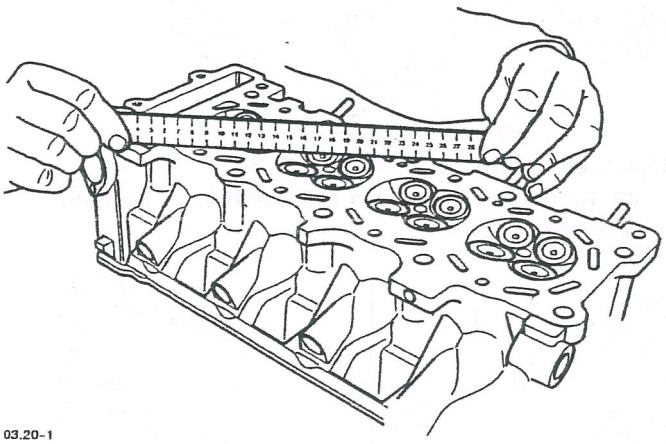

03.20-1

Cylinder head level check

3. Check the cam chain rubbing blade. Renew if worn or damaged.

4. Check the 'O' rings on the throttle bodies and fuel injectors for damage. Replace as necessary.

CAUTION: Ensure all trace of fluids are removed from the threaded holes in the crankcase. Should any fluid remain in any of the threaded holes, severe crankcase damage could result from hydraulic locking of head bolts etc., on assembly of the engine.

Installation

1. Fit the cylinder liners as described in the crankshaft, rods and piston section.

2. Position the cam chain rubbing blade to the right hand side of the upper crankcase. When correctly fitted, the blade locates in the crankcase on a web. The upper section will then fit into the recess in the top of the crankcase.

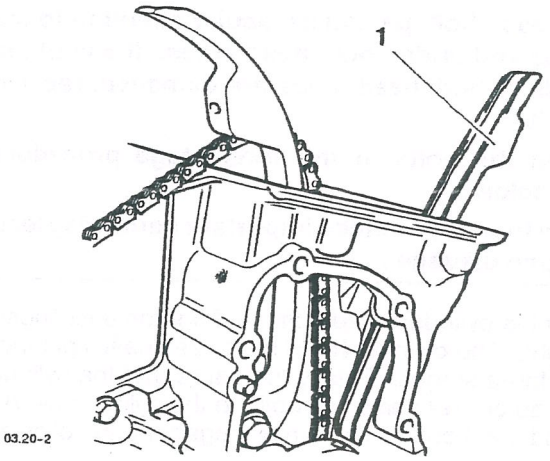

03.20-2

1. Cam chain rubbing blade

3. Thoroughly clean the upper faces of the crankcase taking care not to damage the mating surfaces. Fit a new cylinder head gasket ensuring that the location dowels are correctly in place.

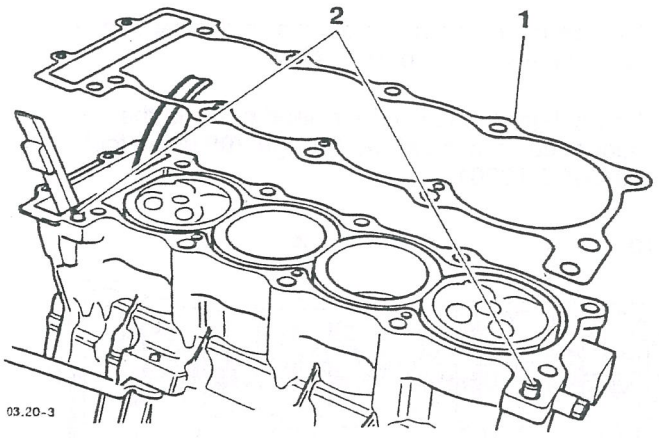

03.20-3

1. Cylinder head gasket
2. Dowels

4. Ensure that the cylinder head is completely clean.

5. Carefully lower the cylinder head over the rubbing blade and locate onto the crankcase dowels.

> **CAUTION: Use the correct procedure to fit and tighten the cylinder head bolts. This will ensure the long term reliability of the cylinder head gasket**
>
> **Clean each bolt, paying particular attention to the threads and under-bolt-head areas. If any of the threads or bolt-head areas are damaged, replace the bolts.**
>
> **Tighten the bolts in the three-stage procedure given below.**
>
> **Failure to observe these important items may lead to engine damage .**

6. Fit the cylinder head bolts and tighten until finger tight. The cylinder head bolts are finally tightened in three stages. This is to ensure that the cylinder head gasket seals correctly to the cylinder head and crankcase. The three stages are as follows:

NOTE:

- **In stages A and B a torque wrench of known and accurate calibration must be used.**

A Tighten the cylinder head bolts, in the sequence shown below, to **20 Nm.**

B Tighten the cylinder head bolts, in the sequence shown below, to torque **27 Nm.**

C Finally tighten the cylinder head bolts, in the sequence shown below, through **70°** using tool 3880105-T0301.

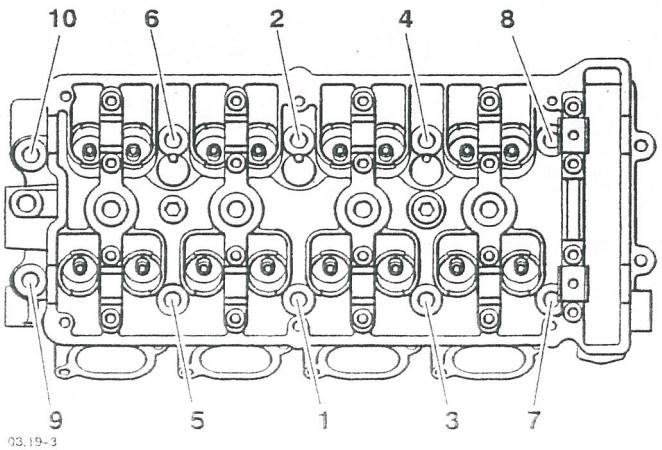

Bolt tightening sequence

7. Fit the bolts securing the outside of the cylinder head to the crankcase and tighten to **12 Nm.**

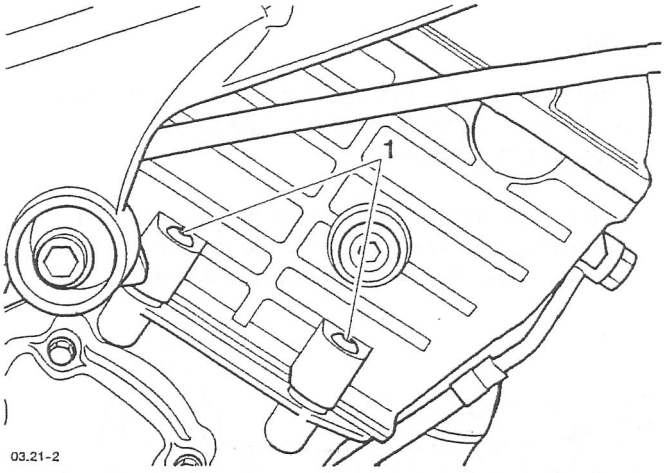

1. Cylinder head to crankcase bolts

8. Fit the left hand frame-to-cylinder head mounting bolt (hand tight).

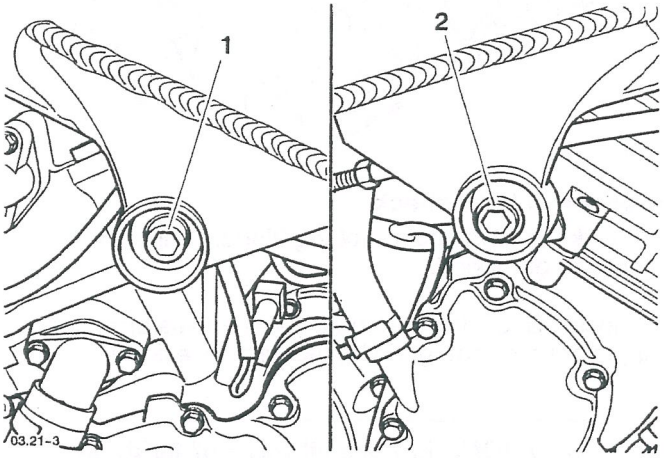

1. Left hand mounting bolt

2. Right hand mounting bolt

9. Tighten the left hand frame-to-cylinder head mounting bolt to **40 Nm.**

10. Tighten the right hand frame-to-cylinder head adjusting screw to **4 Nm.**

11. Fit the right hand frame-to-cylinder head mounting bolt (hand tight).

12. Tighten the right hand frame-to-cylinder head mounting bolt to **40 Nm.**

13. Fit the frame adjuster lockring and tighten to **45 Nm** using service tool T3880380.

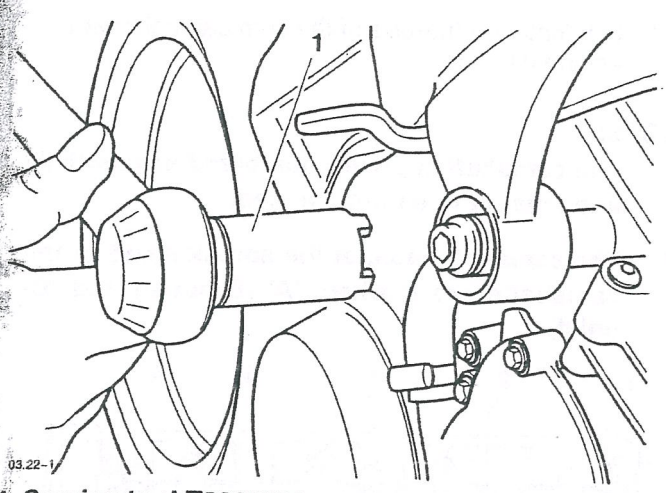

1. **Service tool T3880088**

14. Remove the support from beneath the engine.

15. Fit the throttle body assemblies to the cylinder head, incorporating new 'O' rings if required. Tighten the bolts to **12 Nm.**

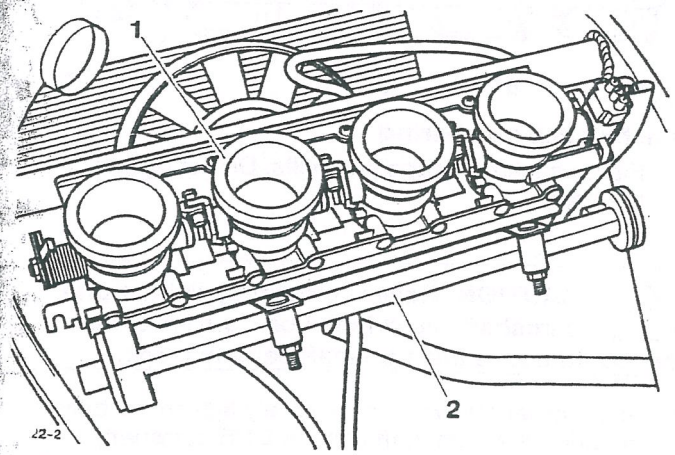

1. **Throttle bodies**
2. **Fuel rail and injectors**

16. Fit the fuel rail and injectors and tighten the fuel rail bolts to **6 Nm.**

17. Refit the air pipes to the throttle bodies in the locations noted prior to removal.

WARNING: Operation of the motorcycle with an incorrectly adjusted, incorrectly routed or damaged throttle cable could interfere with the operation of the brakes, clutch or the throttle itself. Any of these conditions could result in loss of control of the motorcycle and cause an accident.

Move the handlebars to the left and right full lock, and check that cables and harnesses do not bind. A cable or harness which binds will restrict the steering and could result in loss of control of the motorcycle and cause an accident.

18. Check that there is 2-3 mm of free play at the throttle twist grip. Adjust as described in the fuel system section.

19. Fit the oil feed pipe to the cylinder head incorporating new copper washers to the union. Tighten the banjo bolt to **25 Nm.** Ensure that the oil feed pipe is not distorted during the tightening.

20. Adjust any incorrect valve clearances found on removal as described in the valve clearances section.

21. Thoroughly clean the camshafts and lubricate the bearing and lobe areas with a 50/50 solution of engine oil and molybdenum disulphide grease.

NOTE:

- **The inlet camshaft can be identified from the exhaust camshaft by a groove on a machined surface. The exhaust camshaft has a machined surface with no groove.**

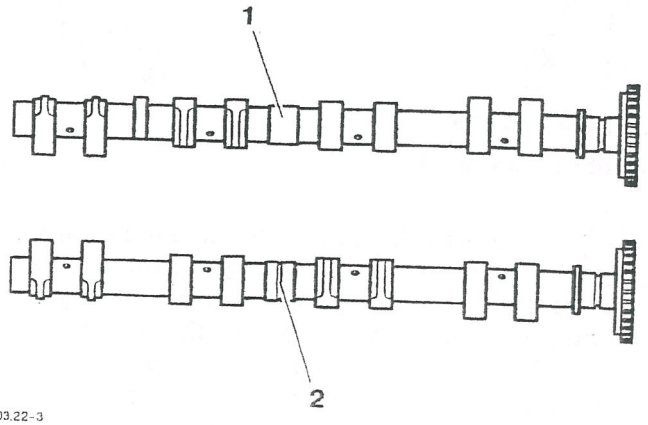

1. Exhaust camshaft (smooth)
2. Inlet camshaft (grooved)

22. Place the camshafts to the cylinder head. Ensure that they are correctly located over their respective valve banks.

23. If necessary, rotate the crankshaft until No. 1 cylinder is at TDC (1/4TDC mark horizontal, arrow pointing forward and level with the crankcase split line).

24. Working on one camshaft at a time, locate the cam chain over the camshaft sprockets.

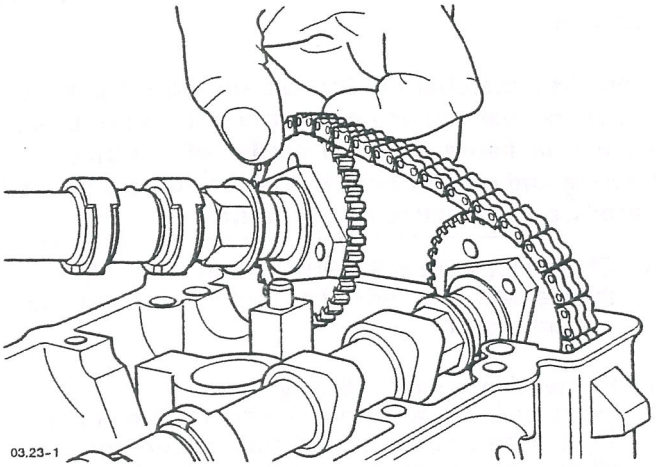

1. Camshaft replacement

25. Position the timing marks on the camshaft sprockets in the position shown below:

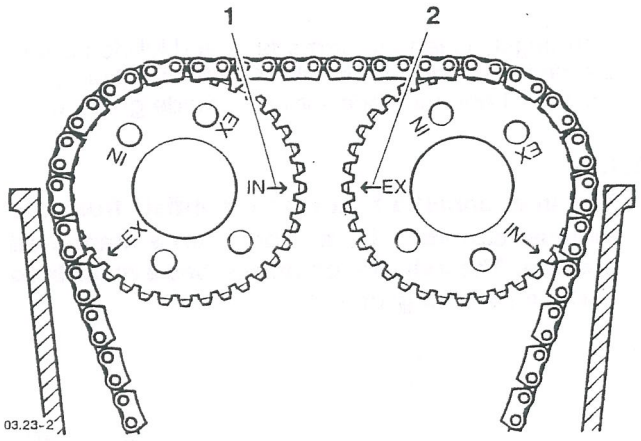

1. Inlet timing mark

2. Exhaust timing mark

CAUTION: Do not fit the camshaft caps without first correctly aligning the timing marks on the camshaft sprockets and centrifugal breather. If the camshaft caps are fitted without aligning the timing marks, the inlet and exhaust valves may contact each other, or the pistons, and cause damage to the pistons, valve head areas and valve stems.

Progressively tighten all the camshaft caps from ONE camshaft before moving onto the second. If both camshafts are progressively tightened at the same time, the valves may contact each other and cause damage to the valve head areas and valve stems.

26. Lubricate the camshaft caps with a 50/50 solution of engine oil and molybdenum disulphide grease.

27. Lubricate the threads of the cam cap bolts with engine oil.

NOTE:

- **The camshaft caps are numbered sequentially and must not be interchanged.**
- **The camshaft caps, at the sprocket end of the camshafts are marked, 'A' (Exhaust) and 'B' (Inlet).**

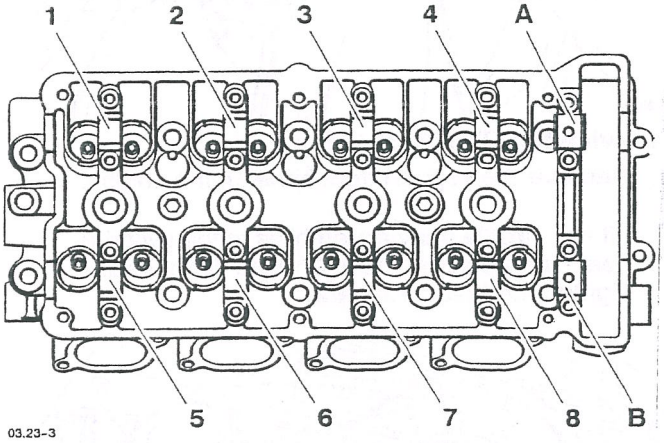

Camshaft cap numbering

28. Fit the camshaft caps and bolts. Do not tighten the bolts.

CAUTION: Never completely tighten one camshaft cap in isolation from the others. This could cause the camshaft caps to crack.

29. In the order shown, progressively tighten the bolts securing the camshaft caps of **ONE** camshaft, until full thread engagement is achieved. Finally, again in the order shown below, torque to **10 Nm.**

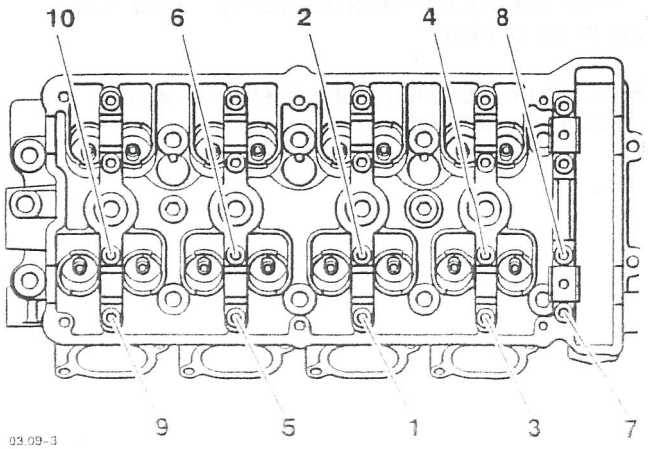

Cap tightening sequence

30. Repeat for the second camshaft.

CAUTION: Do not rotate the camshafts more than 5°. If the camshafts are rotated more than 5° the valves may contact the pistons and cause damage to the piston, valve head areas and valve stems.

31. Rotate the camshafts through 5°. Ensure free rotation.

32. Fit the top pad (rubber side to the cam chain) and tighten the bolts to **10 Nm.**

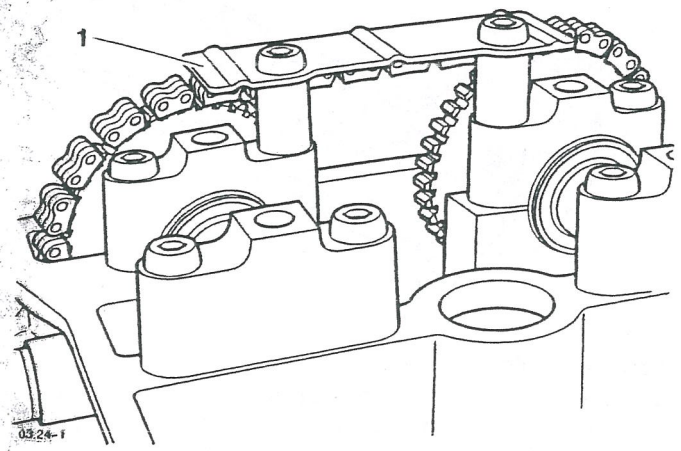

1. Top pad

NOTE:

- **The 1/4TDC arrow mark on the centrifugal breather should be positioned just before TDC to allow for cam chain tensioning.**
- **Ensure the timing marks on the camshafts are still in the correct position.**
- **Before installation of the cam chain tensioner check that the cam chain tensioner 'O' ring is not worn or damaged. Replace as necessary.**

33. Set the cam chain tensioner plunger onto the firs tooth of the ratchet (i.e. minimum extension) by manually lifting the cam chain tensioner pawl.

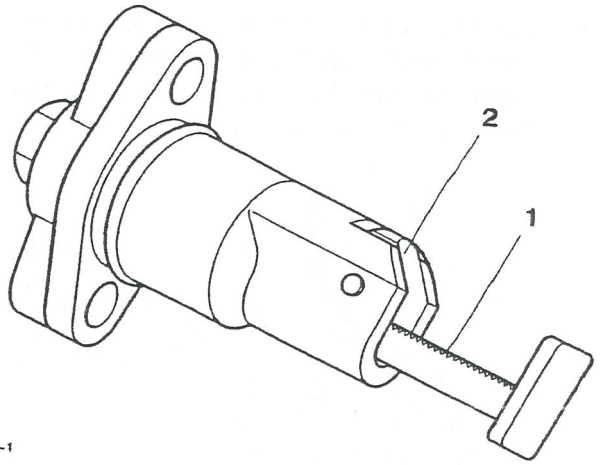

1. Cam chain tensioner ratchet

2. Pawl

34. Fit the cam chain tensioner to the crankcase (ratchet facing upwards) and tighten the bolts to **10 Nm.**

35. Fit the spring and plunger into the cam chain tensioner and, using finger pressure only, push the ratchet into contact with the cam chain tensioner blade.

WARNING: The cam chain tensioner center nut is under spring tension. Always wear hand, eye and face protection when withdrawing the center nut. Take great care to minimise the risk of personnel injury and loss of components.

36. Fit the center nut and washer to the cam chain tensioner. Torque the nut to **23 Nm.**

37. Check that the cam chain tensioner is correctly seated in the middle of cam chain tensioner blade, when viewed from above.

38. Rotate the engine through 4 complete revolutions and reset number 1 cylinder to TDC.

NOTE:

- **No. 1 cylinder is at TDC when the arrow marked 1/4TDC on the centrifugal breather is horizontal, facing to the right and in line with the upper and lower crankcase split line.**

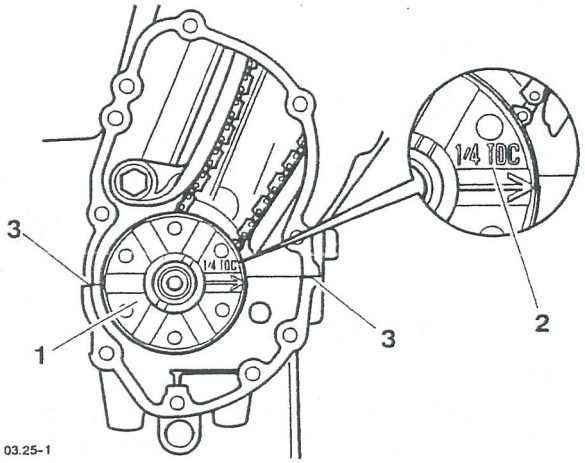

03.25-1

1. Centrifugal breather

2. 1/4TDC mark

3. Crankcase split

39. Ensure that the camshaft timing marks point inwards at a point level with the cylinder head.

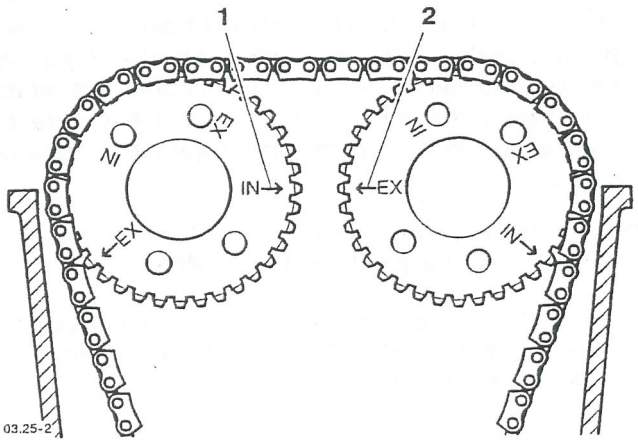

03.25-2

1. Inlet timing mark

2. Exhaust timing mark

40. Correct the cam timing if necessary.

> ⚠ CAUTION: If any components have been renewed, the valve clearances must be checked and adjusted. Running with incorrectly adjusted valve clearances may cause excess engine noise, rough running and engine damage.

41. Re-check the valve clearances and adjust as necessary.

42. Check the condition of the cam cover seal and cam cover bolt seals. Replace or refit as necessary.

43. If removed, fit the cam cover seal to the camshaft cover.

44. Apply silicone sealant to the four 'D' sections

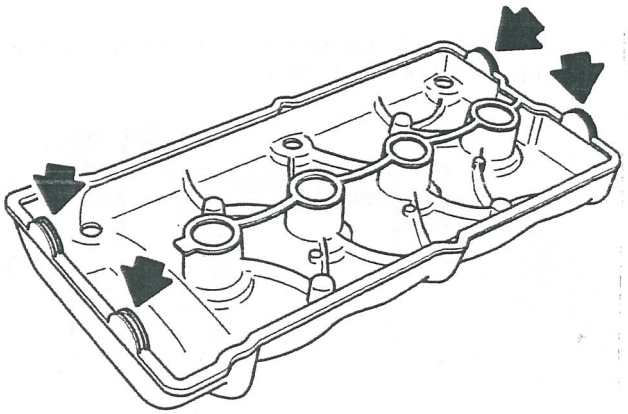

03.06-1

Arrowed: Silcone sealant areas

45. Fit the cam cover to the cylinder head. Ensure that the seal remains in position paying particular attention to the spark plug tower areas.

46. Fit the cam cover bolts, complete with their seals (steel ring side facing upwards) and tighten to finger tight.

47. Progressively tighten the camshaft cover bolts to **10 Nm.**

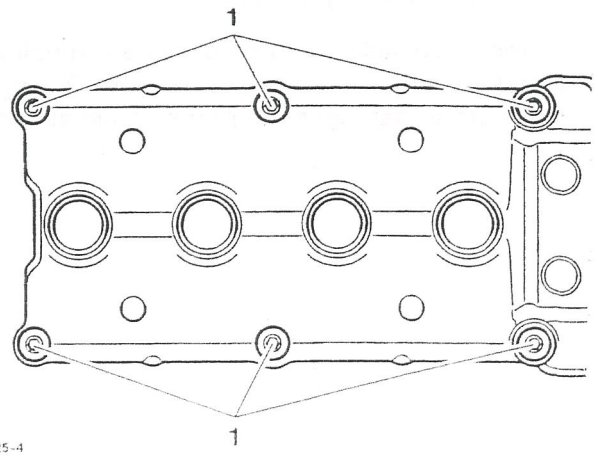

03.25-4

1. Cam cover bolts

48. Refit and connect the ignition coils.

49. Fit the exhaust system as described in the fuel section.

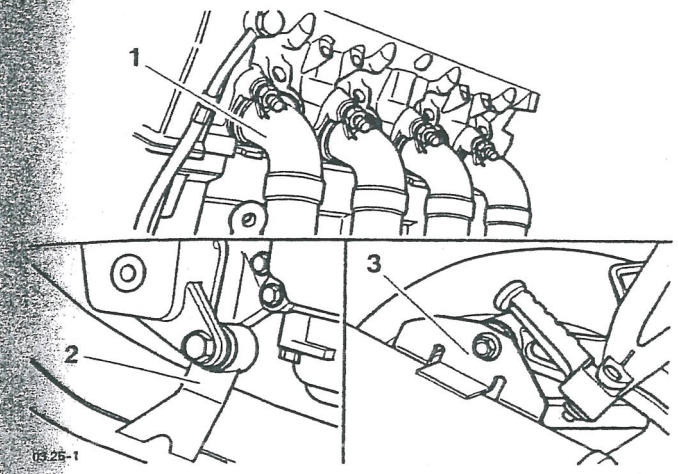

1. **Exhaust header**
2. **Centre mounting bracket**
3. **Rear mount bracket**

50. Fit the radiator as described in the cooling system section.

51. Inspect the coolant hoses. If serviceable refit the hoses in their original position.

52. Connect the coolant temperature sensor.

53. Connect the injectors and throttle position sensor.

54. Fit the coolant drain plug and tighten to **13 Nm.**

55. Fit the air box and fuel tank as described in the fuel system section.

56. Fill the cooling system as described in the cooling system section.

57. Fit both lower fairings as described in the body section.

58. Connect the battery, positive (red lead) first.

59. Fit a new sealing washer to the sump plug and fit the plug. Tighten to **25 Nm.**

60. Fill the engine with the correct grade and type of engine oil (refer to lubrication section).

61. Start the engine and check for oil, fuel and/or water leaks.

VALVES AND VALVE STEM SEALS

Removal from the cylinder head

1. Remove each valve from the head using a valv spring compressor. The compressor must act o the top cup to allow removal of the valve collets.

2. Once the collets are released, remove the followin items:
   - collets
   - valve spring cap
   - valve spring(s)
   - valve stem seal
   - thrust washer
   - valve (de-burr before removal)

Installation

1. Apply a thin coat of lubricant, made from 50% engine oil and 50% molybdenum disulphid grease, to the valve stem.

2. Install the valve into the valve guide and refit th thrust washer to the valve spring recess (removed).

3. Fit the valve stem seal over the valve stem anc using a suitable tool, press down fully until the sea is correctly seated over the valve guide.

NOTE:

- **During fitment of the valve stem seal, tw distinctly different degrees of resistance will b noted when the seal is correctly fitted.**
- **Firstly, press the seal down the valve stem unti the lower side of the seal comes into contac with the valve guide. Greater resistance is felt a this contact point and further gentle pressure i then required to locate the seal over the top en of the valve guide.**
- **On application of this pressure, the seal can b felt to positively locate over the top face of th valve guide. Once correctly positioned, the sea cannot be pushed down any further.**

CAUTION: Incorrect fitment of the valve stem oil seals could lead to high oil consumption and blue smoke emissions from the exhaust system. Do not use excessive force in fitting the seal as this may break the seal ring.

4. Install the valve spring(s) over the valve stem ensuring that the close wound coil end faces towards the cylinder head.

5. Fit the spring cap and compress the valve spring ensuring that the spring is compressed squarely to prevent damage to the valve stem and cylinder head.

6. Fit the valve collets ensuring correct collet location in the spring cap and valve as the spring compressor is released.

CAUTION: Always check for correct location of the valve collets during and after assembly. If not fitted correctly, the collets may become dislodged when the engine is running allowing the valves to contact the pistons. Any such valve to piston contact will cause severe engine damage.

CLUTCH

CONTENTS

	Page
Exploded View - Clutch Cover	4.2
Exploded View - Clutch Assembly	4.3
Exploded View - Clutch Controls	4.4
Clutch Cable	4.5
Removal	4.5
Examination	4.6
Assembly	4.6
Clutch	4.7
Disassembly	4.7
Inspection	4.8
Assembly	4.9

Exploded View - Clutch Cover

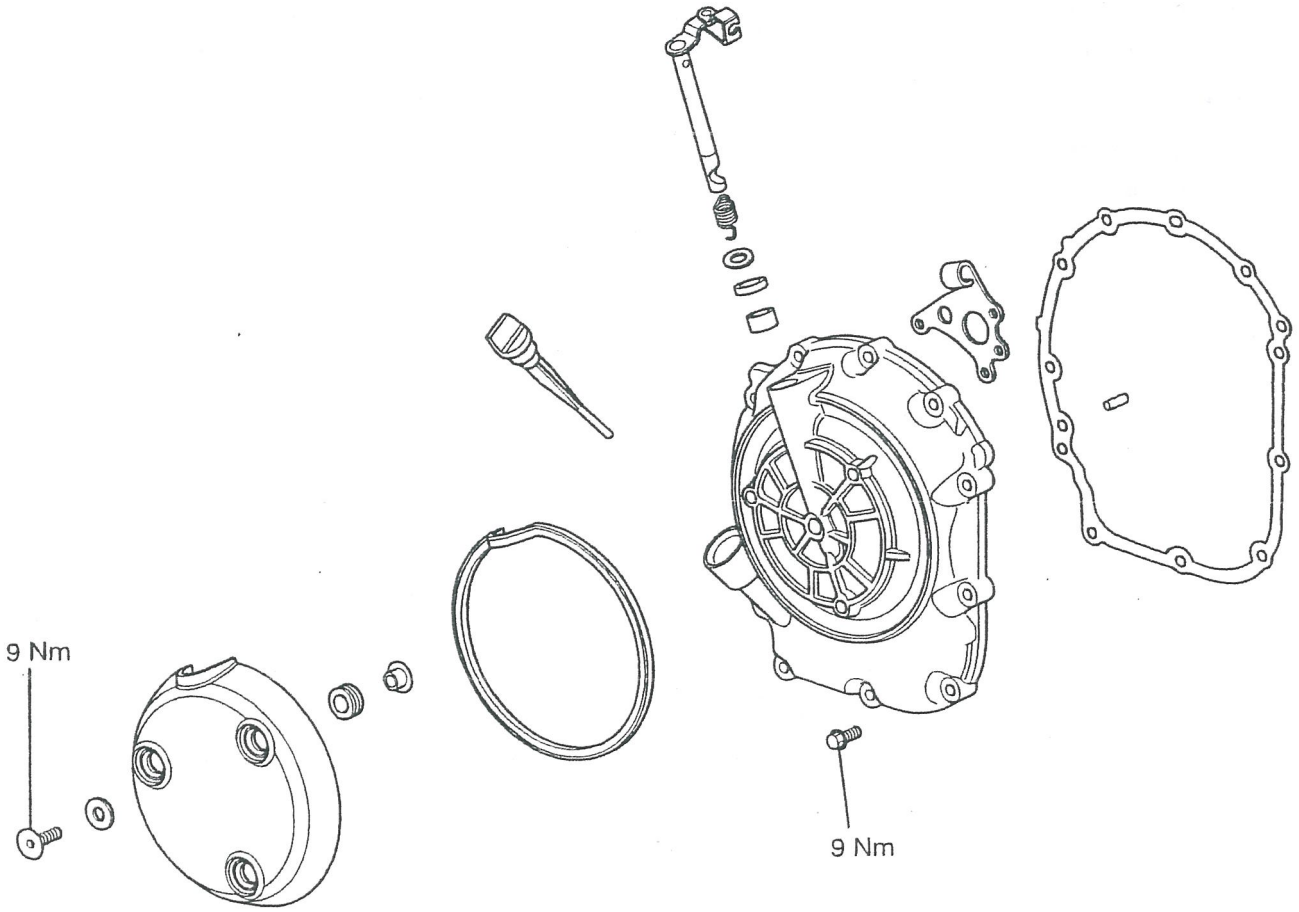

Exploded View - Clutch Assembly

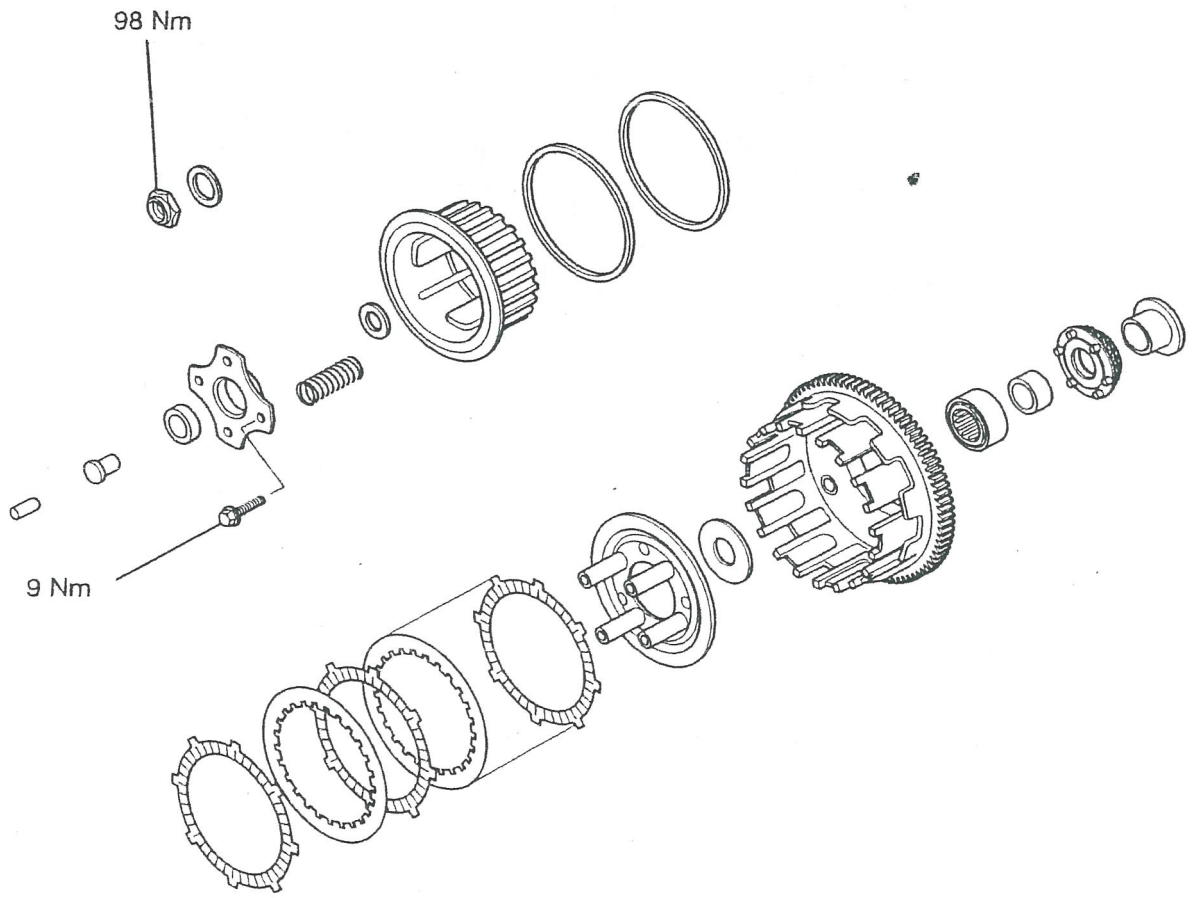

Exploded View - Clutch Controls

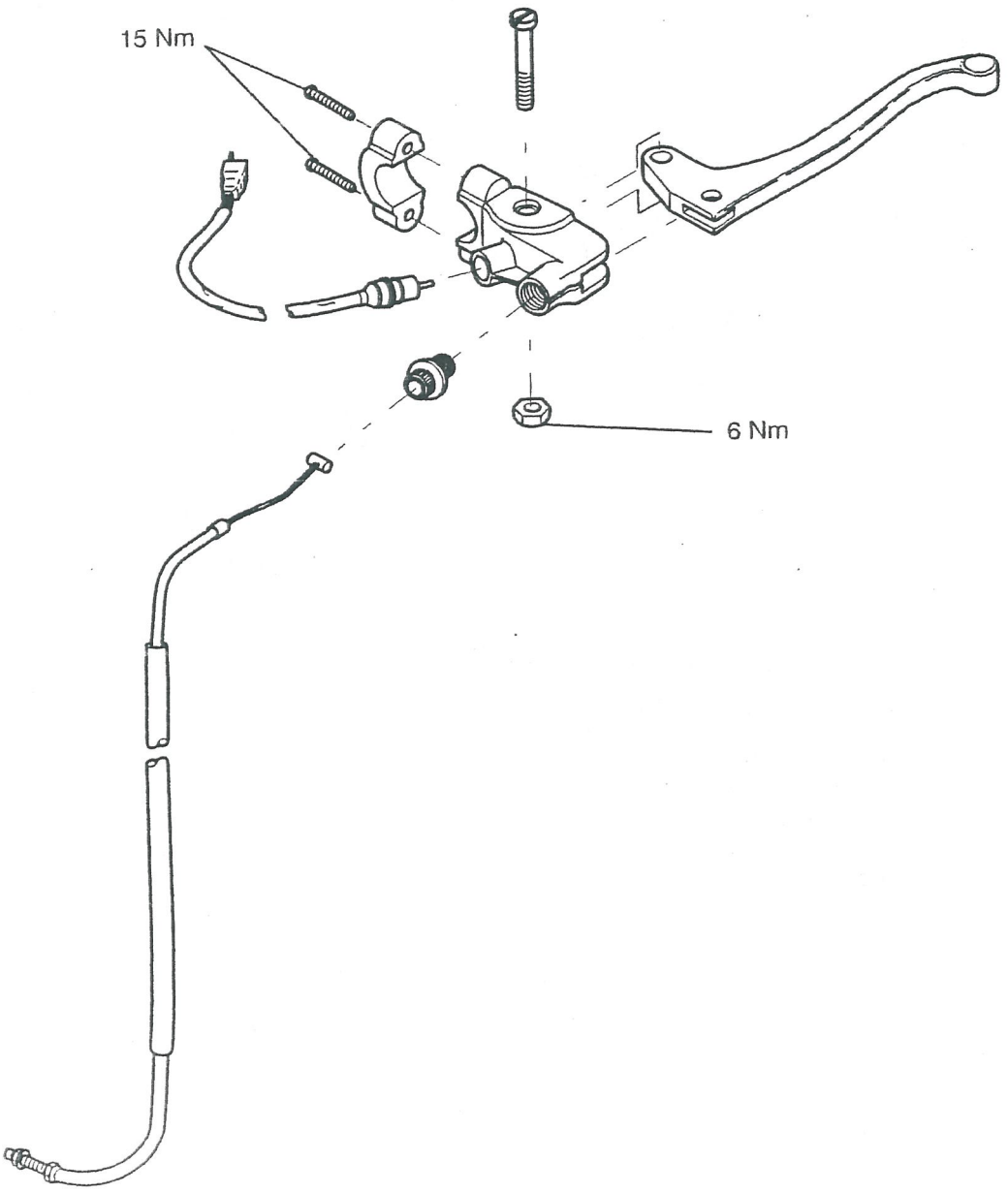

CLUTCH CABLE

Removal

WARNING: Ensure the motorcycle is stabilised and adequately supported, to prevent it falling and causing damage or injury.

1. Position the motorcycle on a paddock stand.
2. Remove the seat and disconnect the battery negative (black) lead first.
3. Remove the right hand lower fairing panel as described in the body section.
1. Slacken the clutch cable locknut at the handlebars and screw the adjuster fully in.

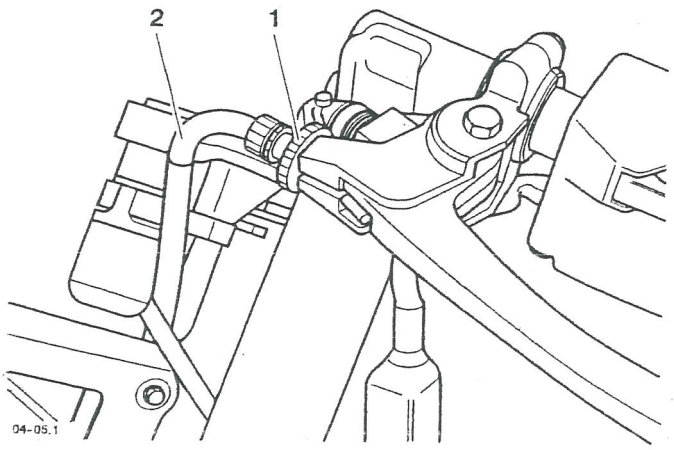

1. Locknut

. Clutch cable

5. At the clutch cover, slacken the clutch cable locknut to give maximum free play in the cable.

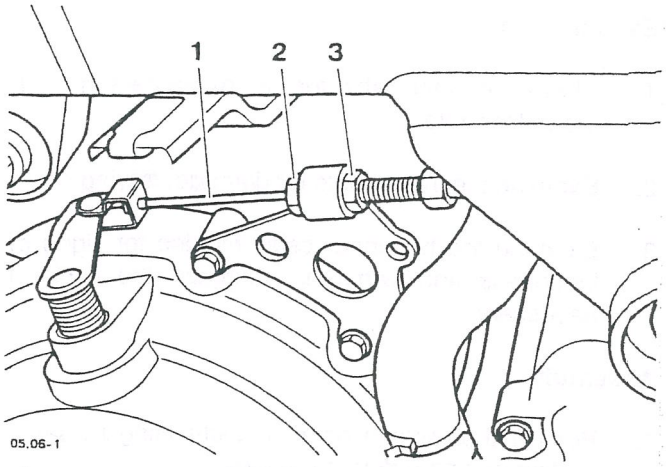

1. Clutch inner cable

2. Lock nut

3. Adjusting nut

6. Release the clutch cable from the actuating arm by pushing the inner cable nipple through the arm and sliding the cable out of the slot.
7. Withdraw the cable through the slot in the underside of the reaction bracket.
8. At the handlebars, turn the inner cable anti-clockwise through the slots in the adjuster and locknut, until the cable can be detached from the lever.

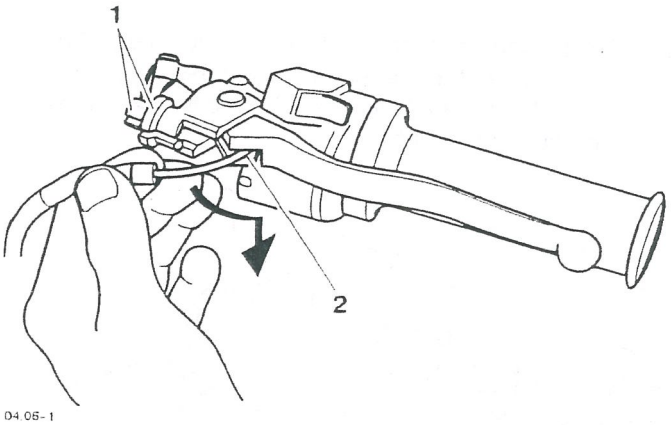

1. Nut/locknut slots

2. Cable release point

NOTE:

- Before final removal of the cable, note the routing through the frame, engine etc.

9. Remove the cable from the motorcycle.

Examination

1. Check the inner cable for free movement through the outer cable.
2. Examine the inner cable for damage, fraying etc.
3. Examine the two inner cable nipples for signs of looseness and damage. Replace the cable if necessary.

Assembly

1. Position the cable to the motorcycle using the same routing as noted during removal.
2. At the engine end of the cable, attach the inner cable to the reaction bracket and actuating arm using a reversal of the removal process.

NOTE:

- **Ensure that the two adjuster nuts are equally spaced, one either side of the reaction bracket.**

3. Set the lever adjuster to a point where an equal adjustment is possible in both directions.
4. Set the adjuster at the engine end to give a preliminary setting of 2-3 mm of free play, measured at the lever.
5. Operate the clutch lever several times and recheck the amount of free-play present.
6. Set the final adjustment of the cable to give 2-3 mm of free-play at the lever by turning the adjuster nut and locknut at the lever end. Secure the setting with the knurled locknut.

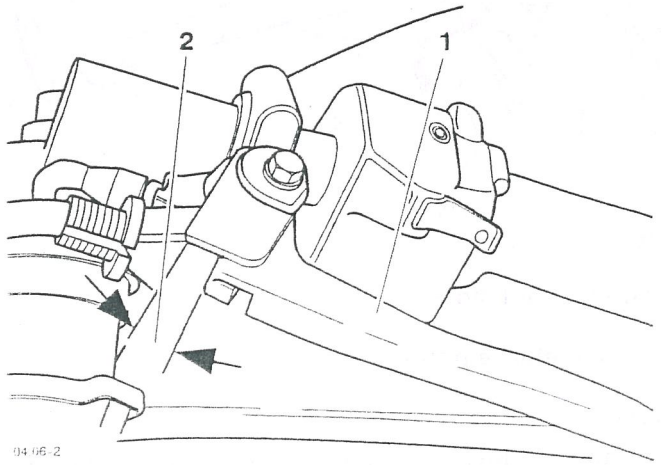

1. Clutch lever
2. Correct setting, 2-3 mm

7. Refit the lower fairing, as described in the body section.
8. Reconnect the battery positive (red) lead first.
9. Refit the seat.
10. Remove the paddock stand and place the motorcycle on its side stand.

CLUTCH

Disassembly

1. Remove the seat and disconnect the battery, negative (black) lead first.
2. Remove the right hand lower fairing as described in the body section.
3. Drain the engine oil, as described in the lubrication section.
4. Slacken the cable lock nut and release the adjuster at the clutch cover end, to give maximum play in the cable.

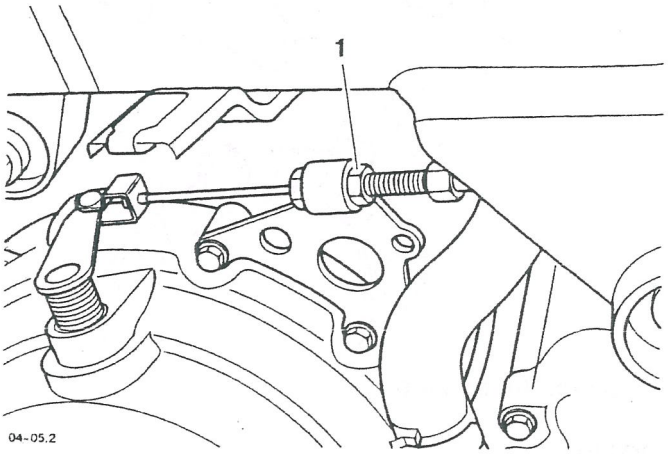

1. Locknut

5. Loosen the clutch cover bolts and remove the clutch cable reaction bracket complete with the clutch cable.
6. Release the clutch cable from the clutch actuating arm (push the inner cable nipple through the actuating arm and slide the cable out of the slot).
7. Remove the clutch cover and clutch cover gasket. Discard the clutch cover gasket.
8. Evenly loosen (but do not remove) the four bolts securing the push plate.
9. Remove the four bolts, push plate (complete with the lifter piece) and four springs.

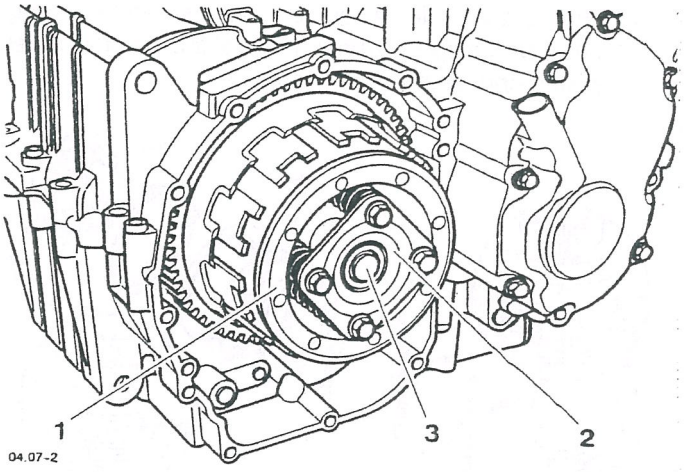

1. Inner plate

2. Push plate

3. Lifter piece

10. Fit service tool part number T3880360 to the inner drum and inner plate assembly. **Do not overtighten the screws securing the tool to the drum.**

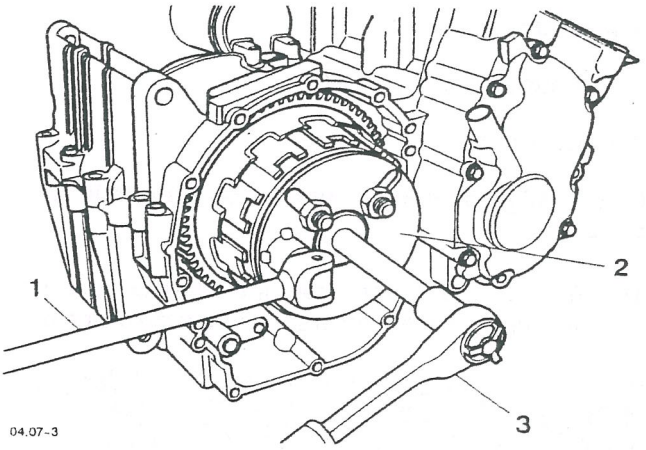

1. Holding tool

2. Service tool T3880360

3. Nut release tools

11. Hold the tool to prevent clutch rotation and remove the nut, Belleville washer and flat washer from the input shaft.
12. Withdraw the inner drum and inner plate assembly complete with the service tool.
13. Remove the service tool from the inner drum and inner plate assembly, invert the assembly and withdraw the inner plate from the inner drum.

14. Noting their orientation remove the judder spring seat, judder spring, the outermost friction disc, steel plates and all other friction discs.

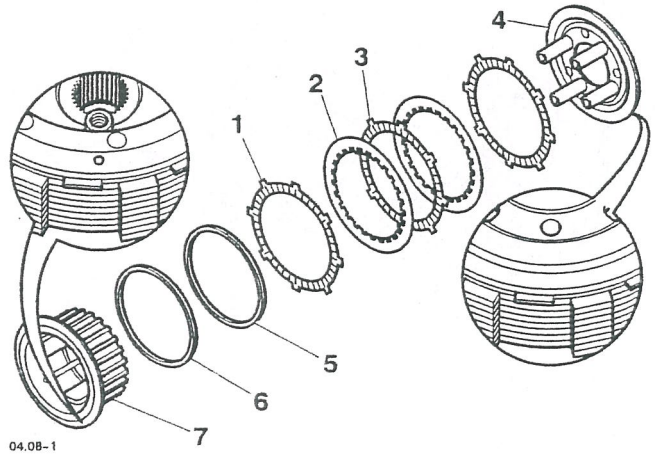

04.08-1

1. Outer friction disc

2. Steel plate

3. Friction disc

4. Inner plate

5. Anti-judder spring

6. Anti-judder spring seat

7. Inner drum

Inset - Alignment markings, inner drum to inner plate

15. Remove the washer from the gearbox input shaft and, using suitable pliers, withdraw the clutch bush.

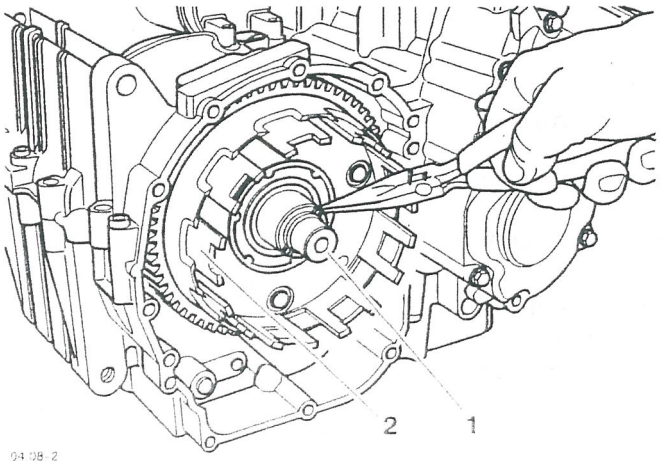

04.08-2

1. Input shaft

2. Outer drum

16. Withdraw the outer drum, titling slightly towards the crankshaft drive gear to aid removal.

Inspection

Inspect all friction discs and clutch plates for signs of wear, damage or distortion before re-use.

If any friction disc or clutch plate has signs of wear, damage or distortion, replace the friction discs or clutch plates as a set.

1. Check the thickness of all clutch friction discs.

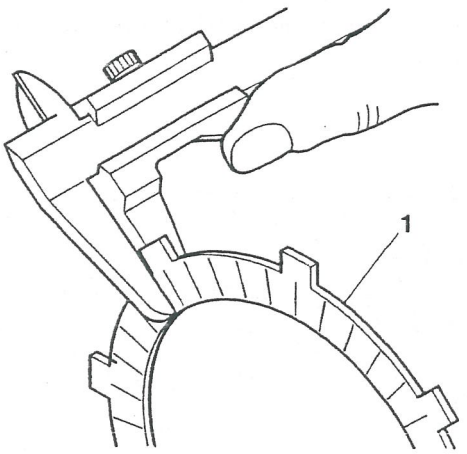

04.08-3

1. Clutch friction disc

NOTE:

- **Friction disc thickness**

Standard	**2.92 - 3.08 mm**
Service limit	**2.72 mm**

Check all clutch plates for bend and warp as follows:

1. Place the disc/plate being checked on a clea surface plate and try to pass a feeler gauge of th maximum thickness between the disc and surfac plate, at several points around the clutch plate. If feeler gauge greater than 0.15mm can be passe beneath the disc at any point, renew the clutch disc as a set.

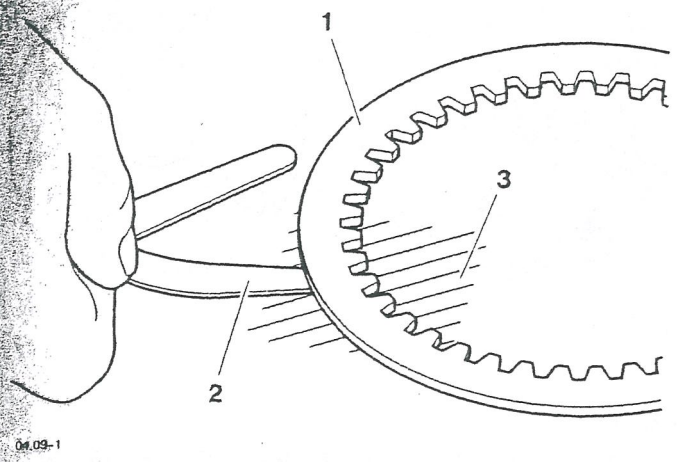

04.09-1

1. Friction plate

2. Feeler gauge

3. Surface plate

NOTE:

- Clutch plate bend/warp

Service limit	0.15 mm

Assembly

NOTE:

- After assembly, ensure that the clutch gear o the outer drum meshes with the cranksha drive gear.
- After assembly, ensure that the outer drum full locates on the oil pump drive pegs.

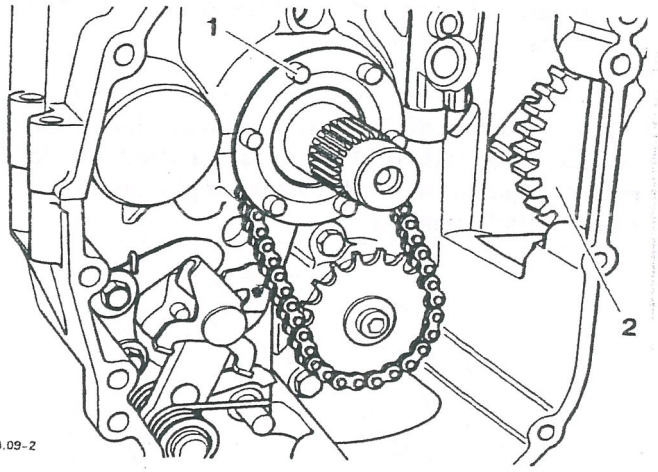

04.09-2

1. Oil pump drive pegs

2. Crankshaft drive gear

1. Fit the outer drum, tilting slightly towards th crankshaft drive gear to aid assembly.

2. Lubricate the clutch bush with a 50/50 solution c engine oil and molybdenum disulphide grease.

3. Fit the clutch bush (grooves outermost) and th washer.

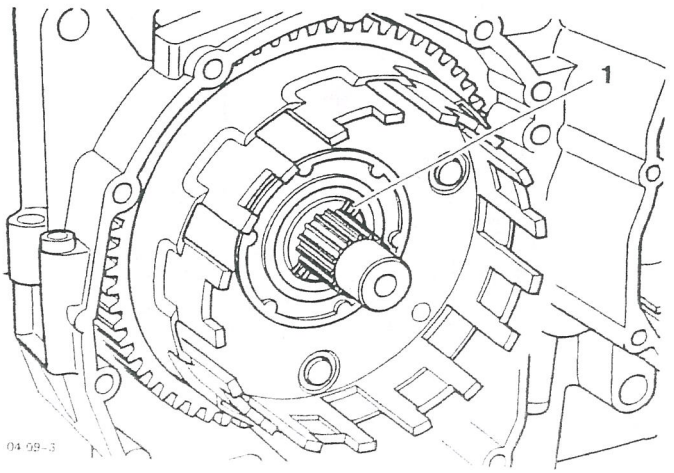

04.09-3

1. Grooves

NOTE:

- **The outermost friction disc differs from all other friction discs and must not be fitted in any other position.**
- **Soak all friction discs in clean engine oil before refitting.**

4. Retaining the same orientation from disassembly, fit the judder spring seat, judder spring, the outermost friction disc, clutch plates and friction discs to the inner drum.

CAUTION: The inner drum and inner plate are marked. They must be fitted with the marks in alignment. Incorrect replacement will cause clutch damage.

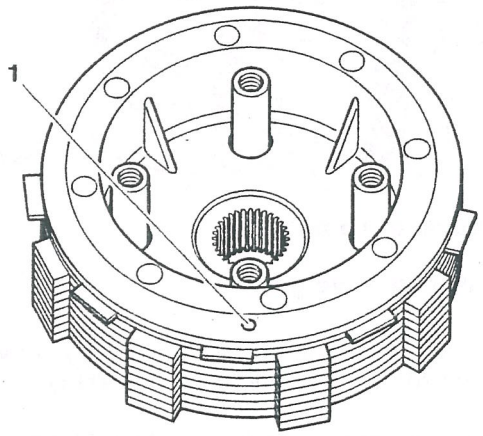

04.10-1

1. Inner drum alignment marking

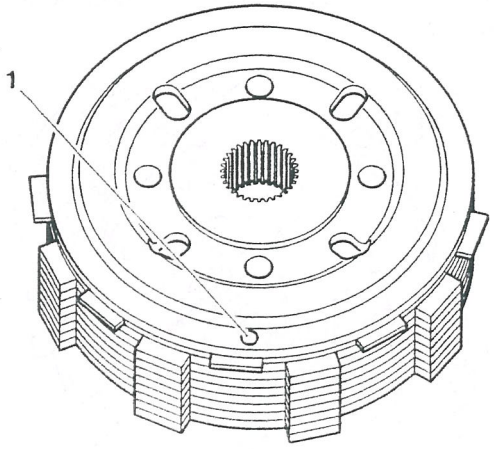

04.10-2

1. Inner plate alignment marking

5. Fit the inner plate to the inner drum taking care to realign the marks.

6. Invert the inner plate and inner drum assembly. Fit service tool part number T3880360 (hand tight) and align the friction disc teeth.

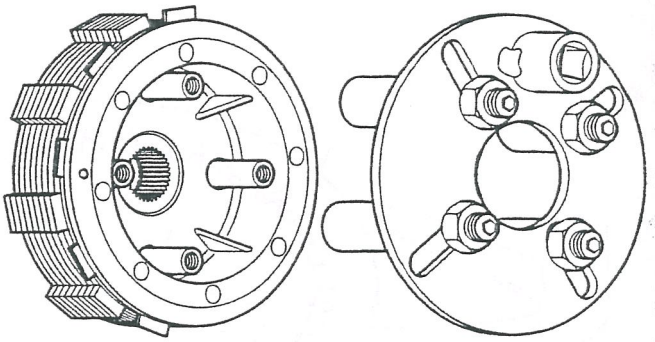

04.10-3

NOTE:

- **The teeth on the outermost friction disc are fitted offset to the others.**

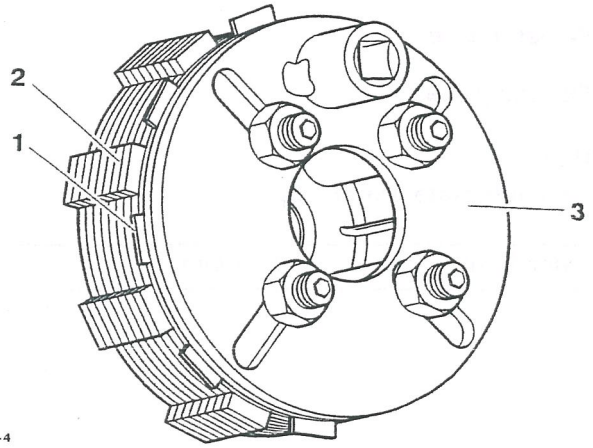

04.10-4

1. Outermost friction disc location teeth

2. Remaining friction disc locations

3. Tool T3880360

7. Fit the inner drum and inner plate assembly to the outer drum. Ensure that (a) the teeth of the last friction disc locate in the shallow locators on the outer drum and (b) the splines on the inner drum locate on the gearbox input shaft splines.

8. Fit the plain washer, Belleville washer ('out' mark facing outwards) and the nut, lip outwards.

CAUTION: Ensure that the flat washer is correctly located in the centre of the clutch. An incorrectly located washer could cause the clutch centre nut to come loose resulting in severe engine damage.

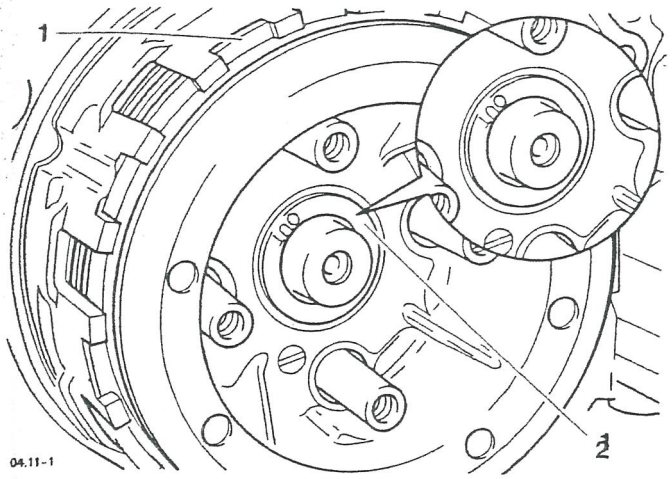

1. Outermost friction disc location teeth

2. Belleville washer

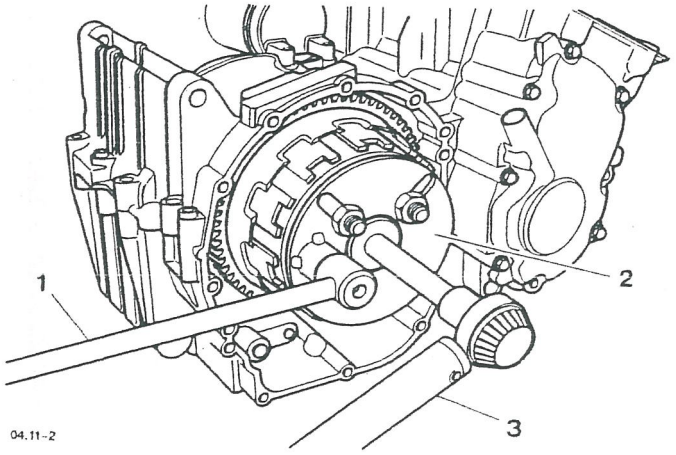

1. Holding tool

2. Service tool T3880360

3. Torque wrench

9. Hold tool T3880360 to prevent clutch rotation and torque the nut to **98Nm.**

10. Remove service tool T3880360 from the clutch inner drum.

11. Refit the four springs and the push plate, ensuring that the lifter piece is in place. Tighten the bolts evenly to **9 Nm.**

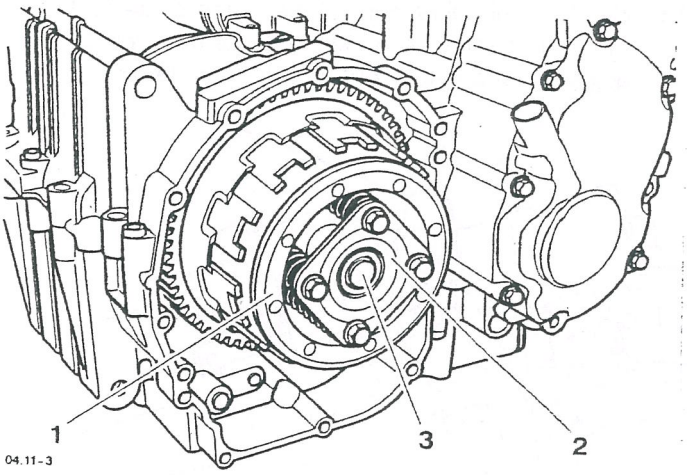

1. Inner plate

2. Push plate

3. Lifter piece

12. Clean and refit the clutch cover, incorporating a new clutch cover gasket. Do not tighten the bolts.

13. Refit the clutch inner cable to the clutch actuating arm and reaction bracket.

14. Refit the clutch reaction bracket to the clutch cover and evenly tighten all the clutch cover bolts to **9 Nm.**

15. Fill the engine with the correct grade and type of engine oil (refer to the lubrication section).

16. Set the adjuster at the clutch end to give a preliminary setting of 2-3 mm clutch cable free-play as measured at the clutch lever.

17. Operate the clutch lever several times and recheck the amount of free-play.

18. Set the final adjustment of the clutch cable to 2-3 mm of free-play at the clutch lever by turning the adjuster nut and lock nut on the clutch lever

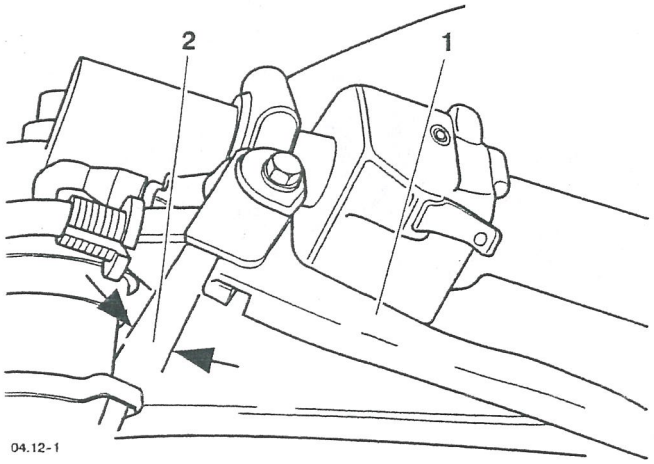

1. Clutch Lever

2. Correct Setting, 2-3 mm

19. Refit the right hand lower fairing as described in the body section.

20. Reconnect the battery, positive (red) lead first.

21. Refit the seat.

CRANKSHAFT, RODS and PISTONS

CONTENTS

	Page
Exploded View - Crankshaft, Connecting Rod, Piston and Liner	5.2
Exploded View - Crankcase	5.3
Engine Remove/Refit	5.4
Installation	5.7
Crankcases	5.10
Disassembly	5.10
Assembly	5.11
Crankshaft	5.14
Removal	5.14
Inspection	5.14
Installation	5.15
Connecting Rods	5.16
Removal	5.16
Inspection	5.17
Installation	5.17
Connecting Rod Big End Bearing Selection/Crankshaft Journal Wear Check	5.19
Con rod big end bearing/crankshaft clearance	5.20
Crankshaft journal diameter	5.20
Connecting rod bearing selection	5.20
Connecting rod big end bearing selection chart	5.20
Crankshaft main bearing/journal wear check	5.21
Crankshaft main bearing/journal clearance	5.21
Crankshaft main journal diameter	5.21
Main bearing selection chart	5.22
Crankshaft end float	5.22
Pistons	5.23
Disassembly	5.23
Inspection	5.24
Piston wear check	5.24
Piston outside diameter	5.24
Piston ring gap	5.24
Piston ring gap tolerances	5.24
Piston rings/ring grooves	5.25
Piston ring/groove clearance	5.25
Assembly	5.25
Cylinder Liners	5.27
Removal	5.27
Inspection	5.29
Installation	5.29

Exploded View

Crankshaft, Connecting Rod, Piston and Liner

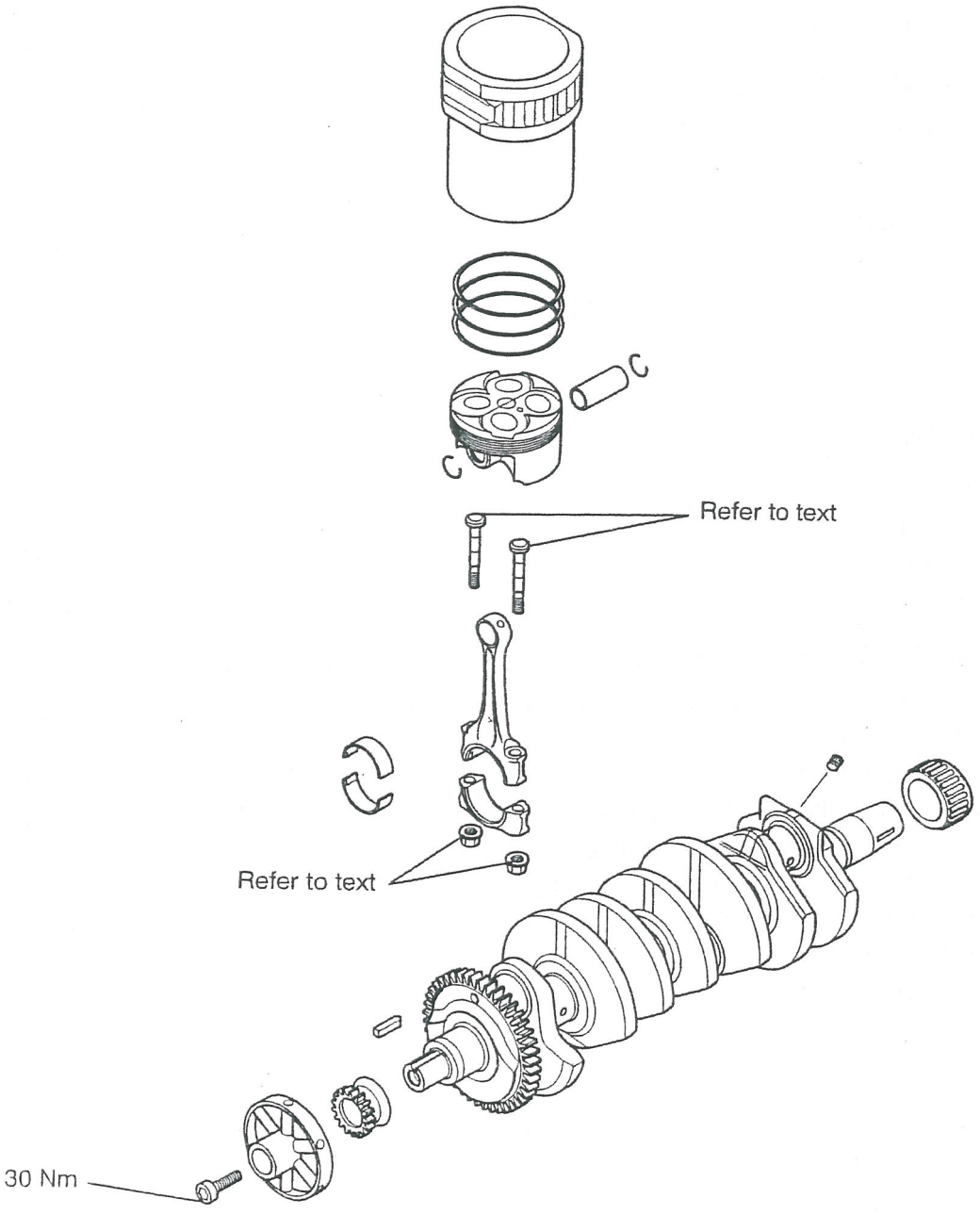

Exploded View - Crankcase

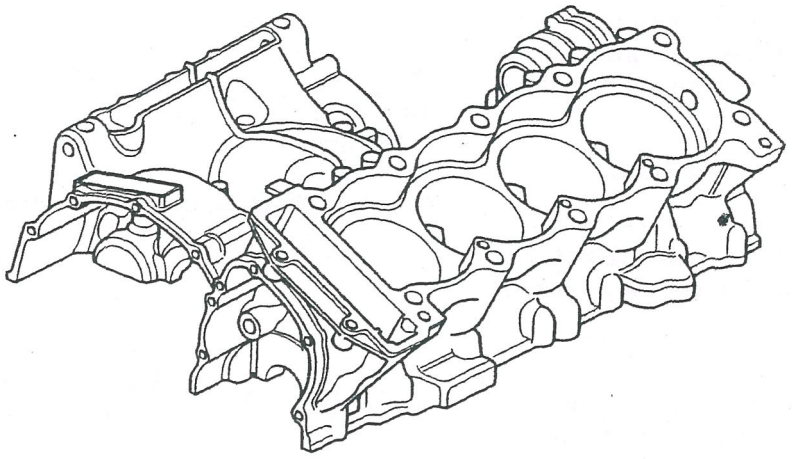

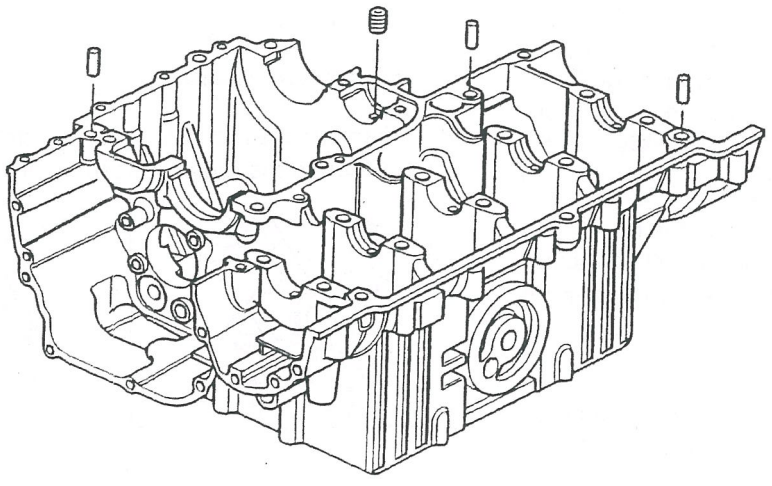

ENGINE - REMOVE/REFIT

Removal

NOTE:

- **The engine may be removed after first removing the seat and disconnecting the battery negative (black) lead first. The fuel tank, airbox and both lower fairings must be removed. Refer to the relevant sections for removal procedures.**

WARNING: Ensure that the motorcycle is stabilised and adequately supported to prevent the risk of personnel injury from the motorcycle falling.

1. Place the motorcycle on a paddock stand.

WARNING: The engine oil may be hot to the touch. Contact with hot oil may cause the skin to be scalded or burned.

WARNING: Prolonged or repeated contact with engine oil can lead to skin dryness, irritation and dermatitis. In addition used engine oil contains potentially harmful contaminants which can cause cancer. Wear suitable clothing and avoid skin contact with the oil.

CAUTION: Do not pour engine oil on the ground, down sewers or drains, or into water courses. To prevent pollution of water courses etc., dispose of used oil sensibly. If in doubt contact your local authority

2. Drain the engine oil, as described in the lubrication section. Once the oil has drained refit the sump plug, with a new sealing washer and torque to **25 Nm.**

WARNING: Do not remove the coolant pressure cap when the engine is hot. When the engine is hot, the coolant inside the cooling system will be under pressure. Contact with the pressurised coolant will cause scalds and skin damage.

3. Drain the coolant, as described in the cooling section.

4. Release the radiator to heat exchanger hose from the heat exchanger.

5. Release the bottom hose from the water pump.

6. Disconnect the top hose from the cylinder head.

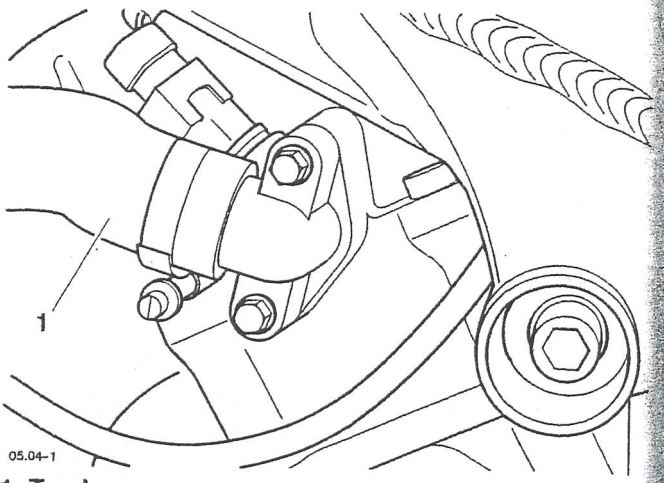

1. Top hose

7. Disconnect the cooling fan multiplug.

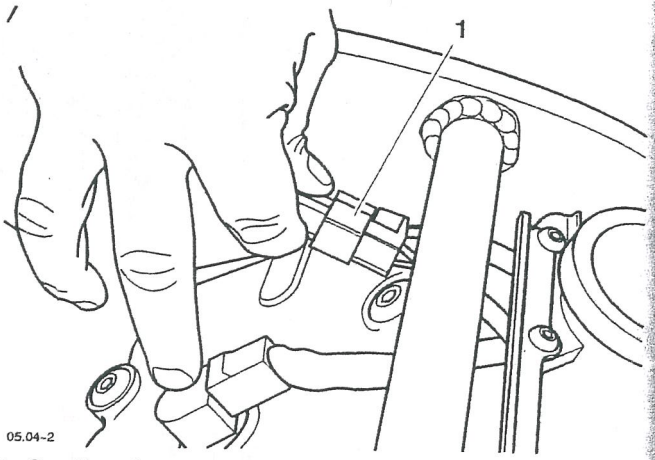

1. Cooling fan multiplug

8. Remove the radiator top and bottom mountings and withdraw the radiator from the frame.

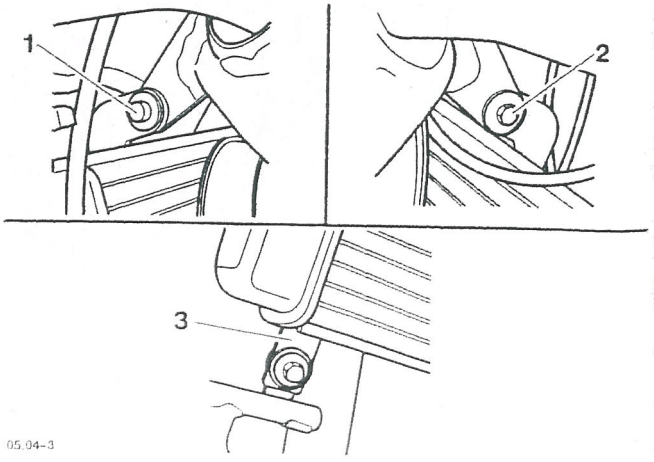

1. Radiator to frame locating dowel
2. Top mount bolt
3. Lower mounting (1 of 2)

9. Remove the exhaust system as described in the fuel system section

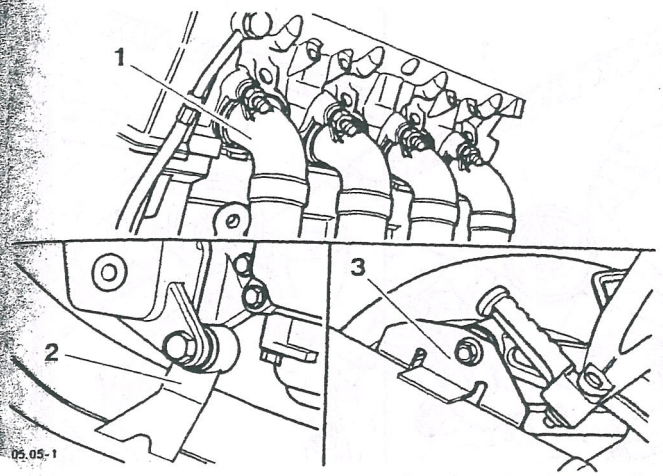

1. Headers
2. Center mounting
3. Rear mounting

10. Note the position of the gearchange lever in relation to the shaft on which it is fitted. Release and remove the gearchange lever.

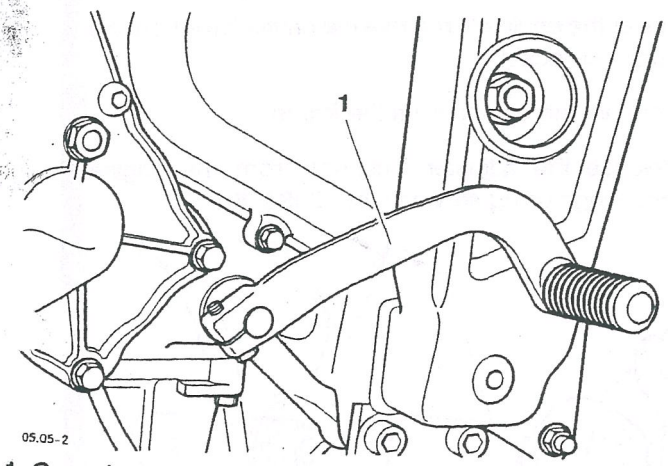

1. Gearchange lever

11. Set the drive chain adjustment to allow maximum free play in the chain. Refer to the rear suspension/final drive section for chain adjustment details.

12. Remove sprocket cover.

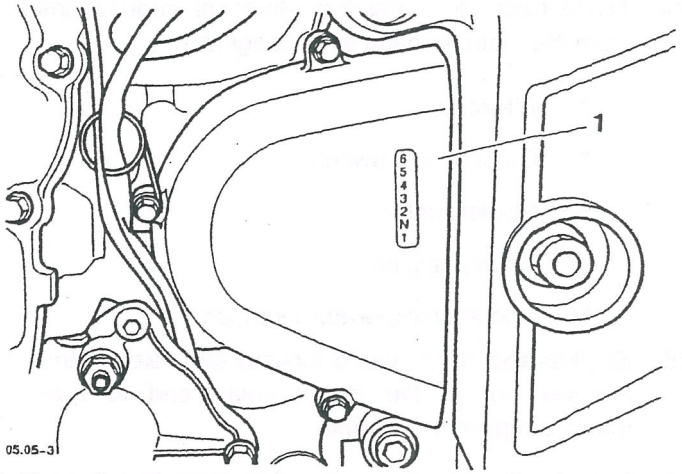

1. Sprocket cover

13. Disconnect the throttle cable from the throttle bodies.

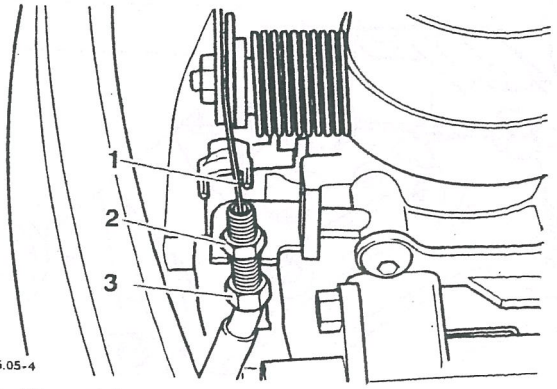

1. Throttle cable
2. Lock nut
3. Adjusting nut

14. Disconnect all remaining electrical connections from the main harness to the engine:
    - Alternator
    - Oil pressure switch
    - Starter motor
    - Neutral switch
    - Coolant temperature sensor.
15. Slacken the clutch cable locknut and release the adjuster nut at the clutch cover end to give maximum play in the cable.
16. Release the clutch inner cable from the clutch actuating arm (push the inner cable nipple through the actuating arm and slide the cable out of the slot in the reaction bracket).

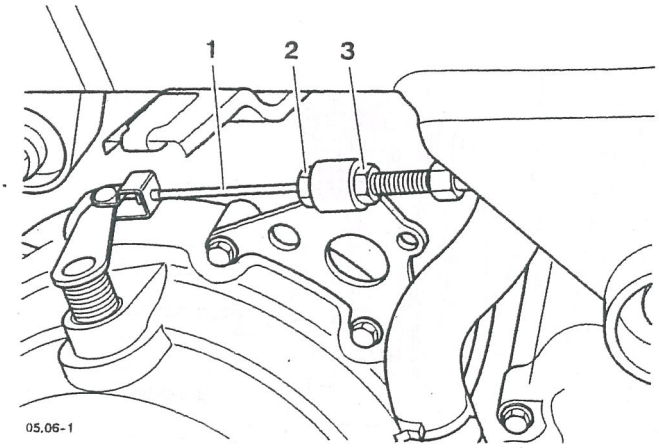

1. Clutch inner cable

2. Lock nut

3. Adjusting nut

17. Detach the clutch cable locknut and withdraw the clutch cable from the mounting bracket.
18. Place a support beneath the engine and ensure that the frame remains adequately and securely supported by the paddock stand.
19. Release and remove the engine mounting nuts and bolts.

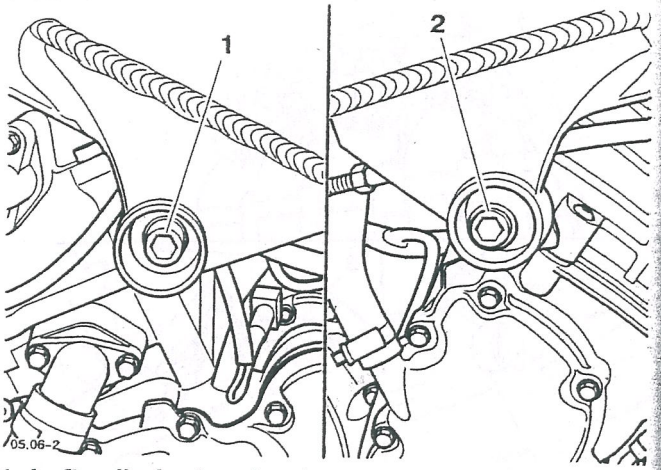

1. Left cylinder head to frame mounting bolt

2. Right cylinder head to frame mounting bolt

NOTE:

- **Collect the spacer, between the engine and frame, from the upper rear engine mounting bolt.**

20. Lower the engine to remove the drive chain from the output sprocket.
21. Remove the engine from the frame.
22. Release the adjuster lockrings from the engine mountings using service tool T3880380.

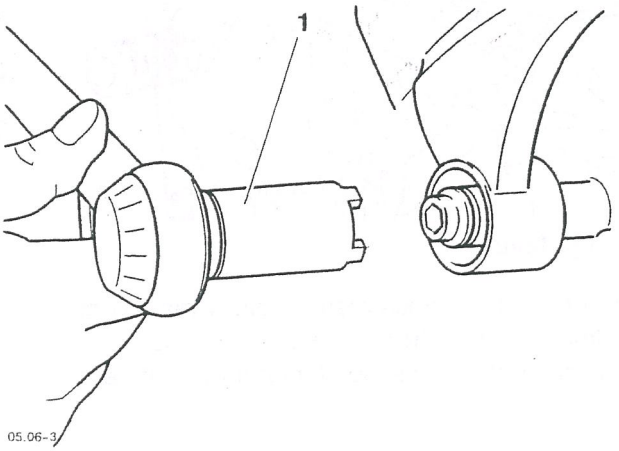

1. Tool T3880380

12. Reconnect all electrical connections from the main harness to the engine:

- Alternator
- Oil pressure switch
- Starter motor
- Neutral switch
- Coolant temperature sensor.

13. Fit the throttle cable to the throttle bodies.

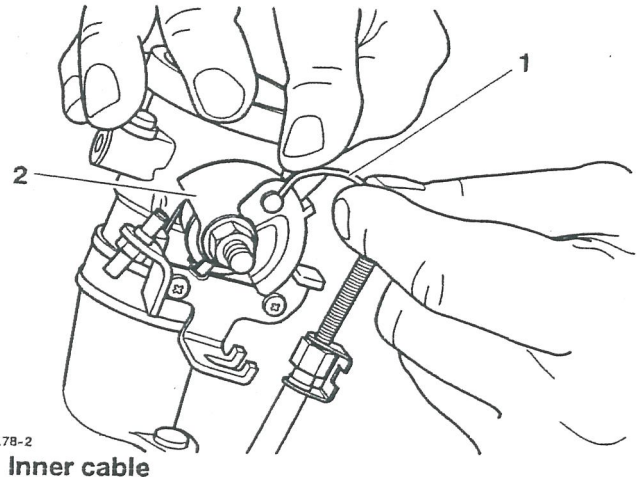

1. Inner cable

2. Throttle cam

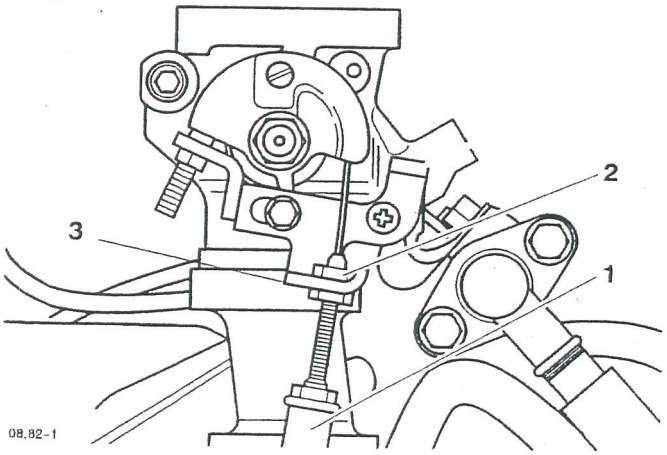

1. Throttle cable

2. Adjusting nut

3. Lock nut

NOTE:

- When correctly set the throttle must have 2-3 mm of free play at the throttle twist grip. If there is more or less than 2-3 mm free play present the throttle cable must be adjusted. To adjust the throttle cable, follow steps 14 to 16.

WARNING: Operation of the motorcycle with an incorrectly adjusted, incorrectly routed or damaged throttle cable could interfere with the operation of the brakes, clutch or the throttle itself. Any of these conditions could result in loss of control of the motorcycle leading to an accident.

WARNING: Move the handlebars to the left and right full lock, and check that cables and harnesses do not bind. A cable or harness which binds will restrict the steering and could result in loss of control of the motorcycle leading to an accident.

14. Set the throttle cable adjuster at the twist grip end so that it has an equal amount of adjustment in each direction.

WARNING: Ensure that, after adjustment, the adjuster locknuts are tightened and the lock clip is fitted. A loose throttle cable adjuster could cause the throttle to stick leading to loss of motorcycle control and an accident.

15. Set the adjuster at the throttle body end of the throttle cable to give a 2-3 mm of free play at the throttle twist grip. Tighten the locknut.

16. Make any minor adjustments as required to give 2-3 mm free play using the adjuster near the twist grip end of the throttle cable. Tighten the locknut.

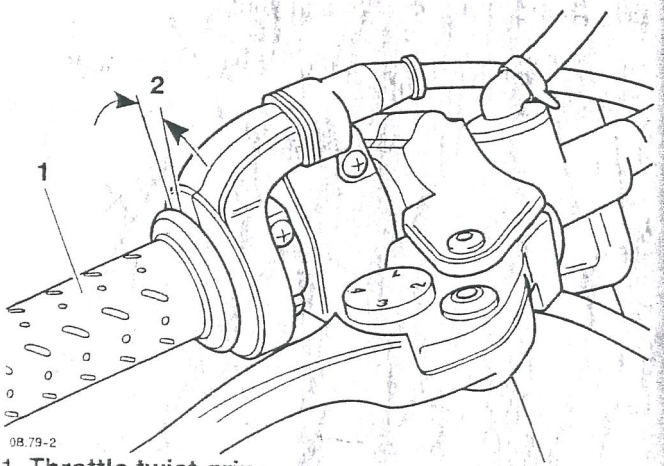

1. Throttle twist grip

2. 2-3 mm

Allow the swing arm to hang free and set the drive chain adjustment as described in the rear suspension/final drive section.

Fit the sprocket cover complete with the cable bracket for the side stand switch. Tighten the bolts to **9 Nm.**

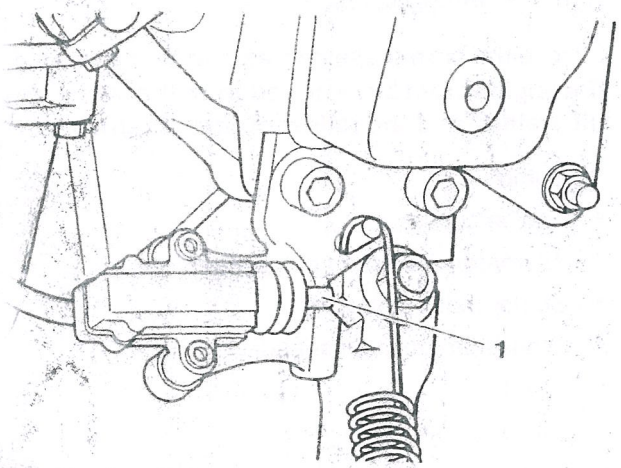

e stand switch

t the gearchange lever in the position noted during emoval. Tighten the clamp bolt to **9 Nm.**

it the exhaust system as described in the fuel ystem section.

osition the radiator to the frame and locate to the p mounting dowel.

t the radiator top mounting bolt, hand tight.

t the lower mounting bolts and tighten.

t the radiator to heat exchanger hose to the heat xchanger.

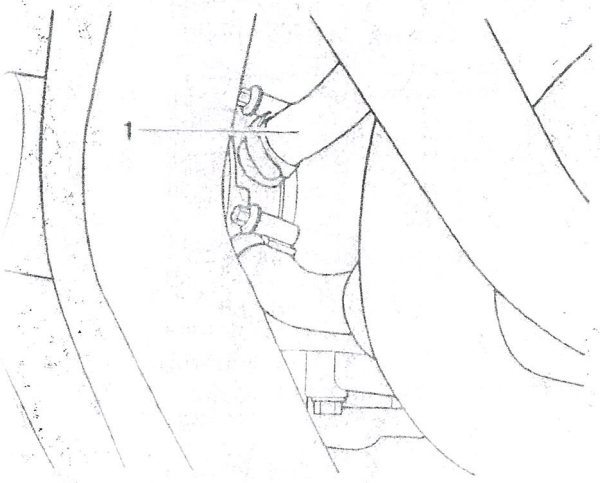

exchanger hose

the bottom hose to the water pump.

26. Fit the top hose to the side of the cylinder head.

27. Tighten all hose clips.

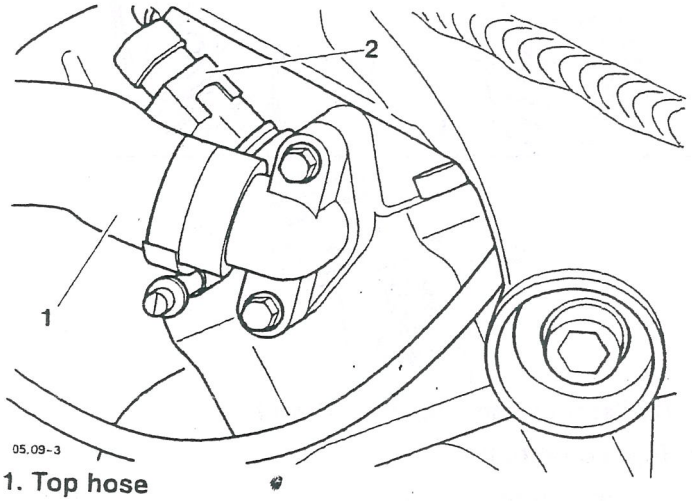

1. Top hose

2. Temperature sensor connector

28. Reconnect the cooling fan multiplug.

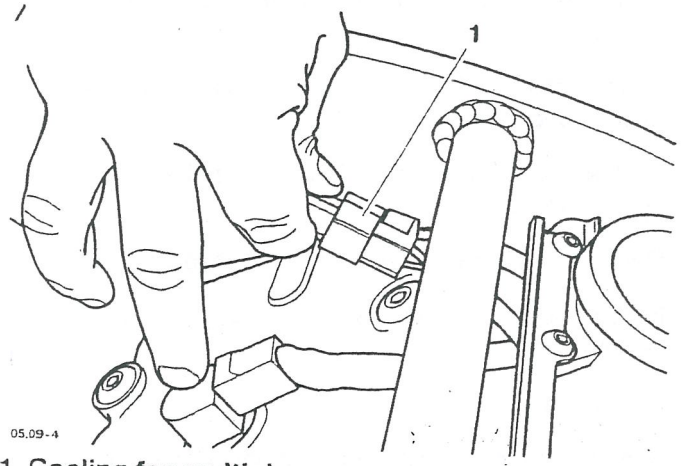

1. Cooling fan multiplug

29. Tighten the radiator top mounting bolt to **6 Nm.**

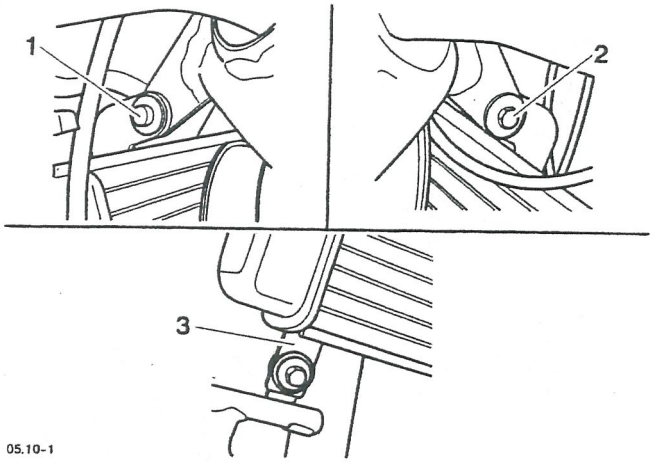

1. Radiator to frame locating dowel

2. Top mount bolt

3. Lower mounting (1 of 2)

30. Fit the coolant drain plug and tighten to **13 Nm.**

31. Fill the engine with the correct grade and type of engine oil, as described in the lubrication system section.

32. Fit the airbox and fuel tank as described in the fuel system section.

33. Fill the cooling system as described in the cooling system section.

34. Reconnect the battery positive (red) lead first.

35. Fit both lower fairings as described in the body section.

36. Fit the seat.

37. Remove the motorcycle from the paddock stand.

CRANKCASES

NOTE:

- **The crankcase consists of upper and lower halves which are machined as a matched set. They must never be assembled to non-matching halves.**
- **Before the crankcase halves can be separated, the engine must be removed from the frame, the oil drained and the following items removed:**
  - Sump
  - Engine covers
  - Alternator and sprag gear
  - Starter motor and gear
  - Crankshaft position sensor
  - Clutch
  - Oil pump drive
  - Heat exchanger

Refer to the relevant sections for removal procedures.

Disassembly

CAUTION: Failure to follow the correct bolt release sequence may result in permanent crankcase damage.

1. Working on the upper crankcase, release and remove the bolts (M6 and M8) in the sequence shown below:

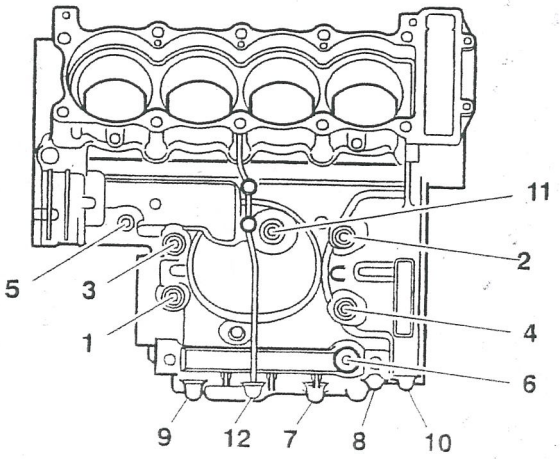

1. Upper crankcase bolt release sequence

2. Invert the engine

3. Release and remove the lower crankcase bolts (M6, M8 and M8 main bearing bolts) in the sequence shown below:

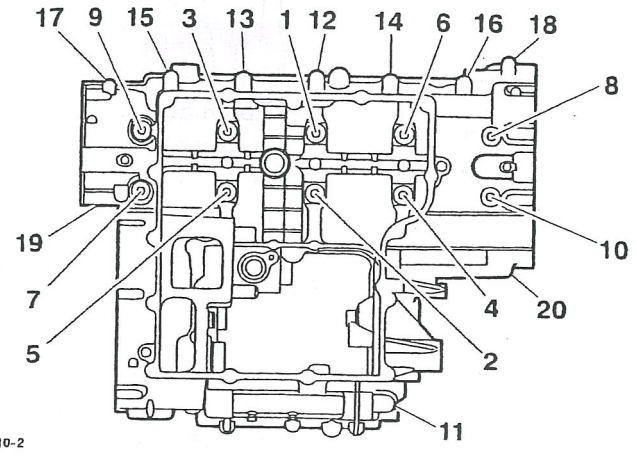

1. Lower crankcase bolt release sequence

CAUTION: Do not use levers to separate the upper and lower crankcase halves or damage to the crankcase halves could result.

4. Withdraw the lower crankcase from the upper crankcase. Ensure that the three locating dowels and gear shafts remain in the upper crankcase and the crankshaft main shell bearings remain with the lower crankcase half.

NOTE:

- **At this point the transmission shafts, crankshaft shell bearings etc. can be removed if required.**

Assembly

NOTE:

- **Fit the gearbox shafts (if removed).**

1. Ensure that the locating ring and dowels on the input and output shaft bearings are in position in the circlip grooves/locations in the crankcase.

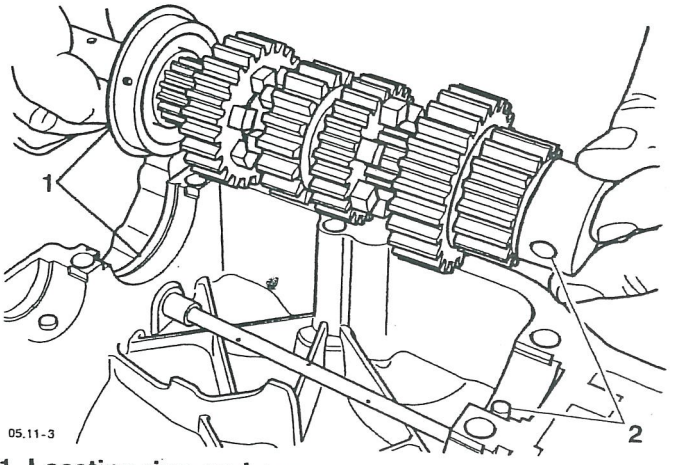

1. Locating ring and groove

2. Locating dowel and recess.

2. Ensure that the transmission is in neutral.

3. Ensure that the three locating dowels are located in the upper crankcase.

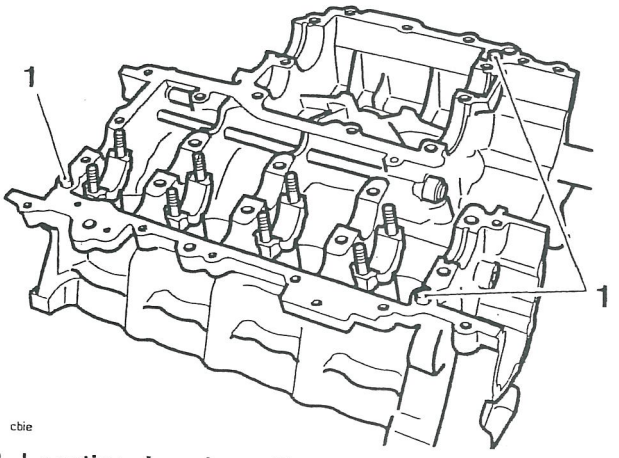

1. Locating dowel positions

4. Using a high flash point solvent, clean the crankcase mating surfaces. Wipe the surfaces clean with a lint-free cloth.

CAUTION: Do not use excessive amounts of sealant. The extra sealant may become dislodged and could block the oil passages in the crankcase causing severe engine damage

5. Apply a thin bead of silicone sealant (Three-bond 1215J liquid gasket is used at the factory) to the lower crankcase mating surface as shown in the diagram below:

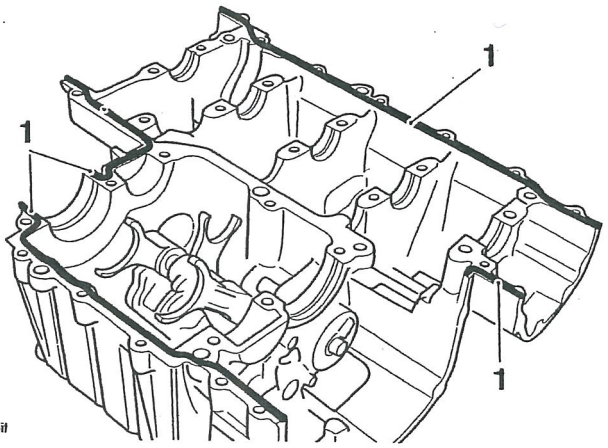

1. Sealant areas

NOTE:

- **If a new set of main bearing shells are being fitted, use the bearing shell selection processes detailed later in this section.**
- **The bearing shells are keyed and can only be fitted one way.**

6. Install the crankshaft main bearings in the upper and lower crankcases (which should be clean and dry). Lubricate the main bearings with a 50/50 solution of engine oil and molybdenum disulphide grease.

7. Lubricate the crankshaft journals with a 50/50 solution of engine oil and molybdenum disulphide grease.

NOTE:

- **An assistant may be required to support the lower crankcase half during alignment.**

8. Position the lower crankcase to the upper, ensuring that the gear selectors are correctly engaged.

NOTE:

- **Ensure that both halves fit correctly before tightening any bolts.**

9. Fit the bolts (M6, M8 and M8 main bearing bolts) into the lower crankcase half and hand tighten.

10. Invert the crankcases. Fit the bolts (M6 and M8) into the upper crankcase half and hand tighten.

CAUTION: Failure to follow the correct bolt tightening sequence may result in permanent crankcase damage.

The torque characteristics of some of the crankcase bolts are sensitive to the rate at which they are tightened. If all the torque is applied in one action the bolt may be stretched and could become loose when in service, resulting in severe engine damage.

11. Invert the engine. In the correct sequence tighten lower crankcase bolts 1 through 11 to **12 Nm.**

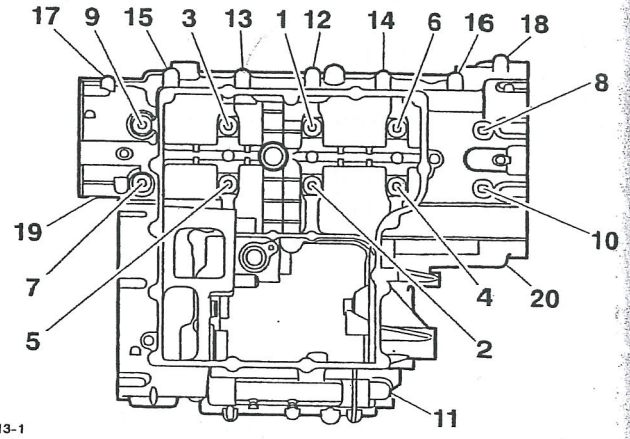

1. Bolt tightening sequence – lower crankcase

12. Invert the engine. In the correct sequence tighten **upper crankcase** bolts 21, 23, 25 and 26 to **12 Nm.**

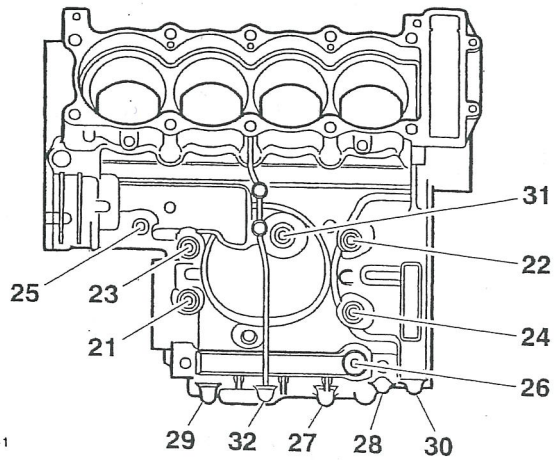

1. Bolt tightening sequence – upper crankcase

13. Invert the engine. In the correct sequence tighten **lower crankcase** bolts 12 through 20 to **12 Nm.**

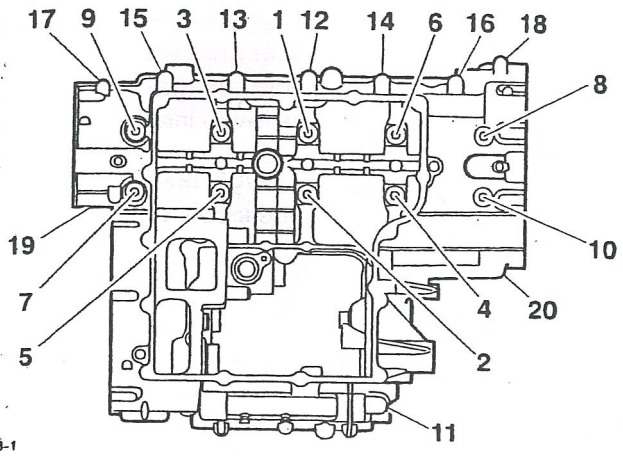

1. Bolt tightening sequence – lower crankcase

14. Invert the engine. In the correct sequence tighten bolts 27 through 32 then 22 and 24 to **12 Nm.**

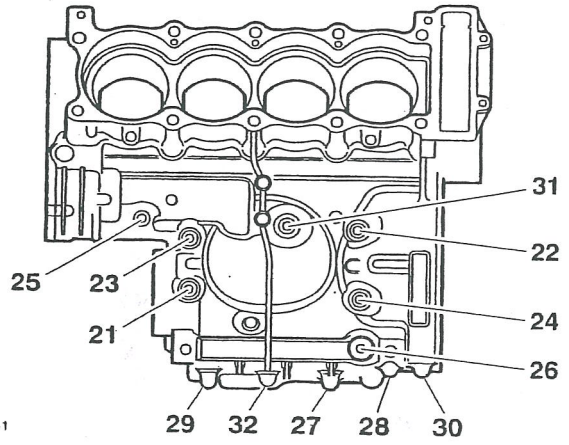

1. Bolt tightening sequence – upper crankcase

15. Invert the engine. In the correct sequence tighten **lower crankcase** bolts 1 through 10 to **27 Nm.** Tighten bolt 11 to **20 Nm.**

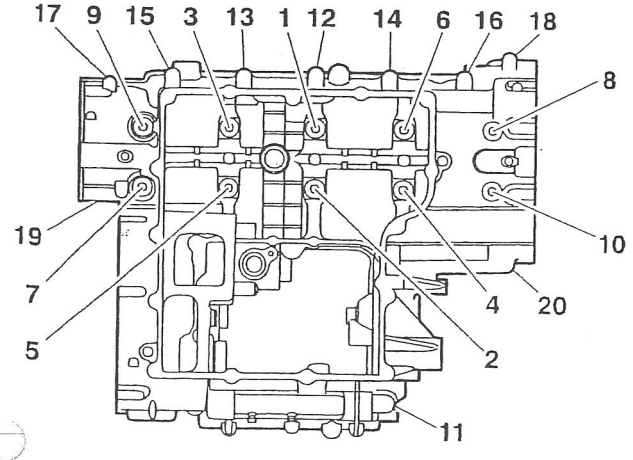

1. Bolt tightening sequence – lower crankcase

16. Invert the engine. In the correct sequence tighten bolts 21, 23, 25 and 26 to **20 Nm.** Tighten bolts 22 and 24 to **27 Nm.**

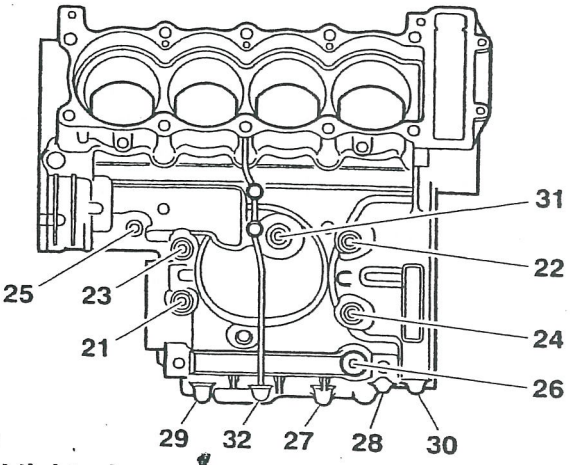

1. Bolt tightening sequence – upper crankcase

17. This completes the crankcase bolt tightening procedure.

18. Rotate the crankshaft clockwise. Check for tight spots and rectify as necessary.

19. Refit the:

- Sump
- Engine covers
- Alternator and sprag gear
- Starter motor and gear
- Crankshaft position sensor
- Clutch
- Oil pump drive
- Heat exchanger
- Refer to the relevant sections for replacement procedures.

20. Fill the engine with the correct grade and type of engine oil (refer to Lubrication section).

21. Fit the engine into the frame (for details, refer to engine remove/refit procedures in this section).

CRANKSHAFT

Removal

NOTE:

- **The crankshaft may be removed after first removing the engine from the frame. The crankcase upper and lower halves must be separated and the cam chain removed. Refer to the relevant sections for removal procedures.**

1. Mark each big end cap and connecting rod to identify both items as a matched pair and their orientation to each half.
2. Release and remove the nuts securing the big end caps to the connecting rods. Remove the big end caps. Discard the nuts.

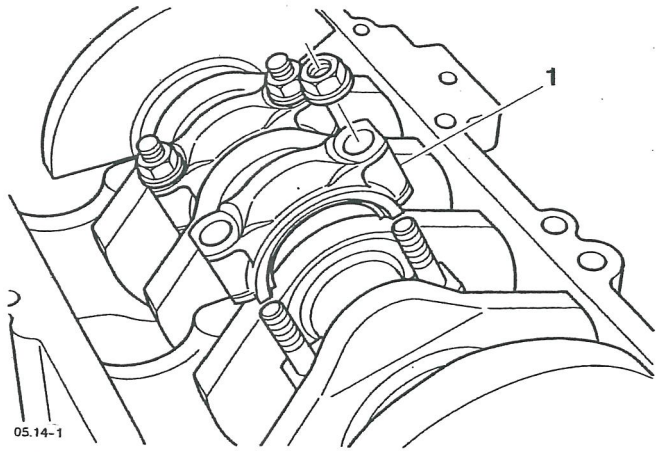

1. Big end cap

NOTE:

- **Ensure that one half of the bearing shell remains in the connecting rod and one half remains in the big end.**

3. Withdraw the crankshaft from the upper crankcase half.
4. Withdraw each connecting rod and piston assembly sufficiently from the cylinder liner to enable the big end bolts to be removed. Discard the bolts.

Inspection

1. Remove all main and big end bearing shells. Inspect for damage, wear, overheating (blueing) and any other signs of deterioration. Fit a new set of main and/or big end bearing shells if damage, wear, overheating or deterioration is found. If a new set of bearing shells are being fitted, use the bearing selection processes detailed later in this section.
2. Inspect the crankshaft bearing surfaces for grooves or pitting. If any grooving or pitting are found on the crankshaft bearing surfaces, fit a new crankshaft.
3. Check crankshaft end float (refer to elsewhere in this section for checking procedures). If the crankshaft end float is outside the specified service limits, the crankshaft and/or the crankcase must be replaced.

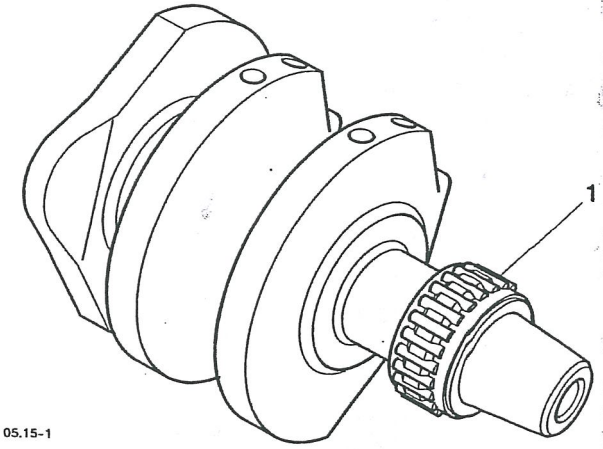

1. Needle roller bearing

4. Inspect the needle roller bearing for damage, wear, overheating (blueing) and any signs of deterioration. Fit a new needle roller bearing if damage, wear, overheating or any signs of deterioration are found.

Installation

CAUTION: Always check the bearing journal clearance, as described later in this section, before final assembly of the crankshaft. Failure to select the correct crankshaft bearing shells will result in severe engine damage.

1. Fit new big end bolts to the connecting rods.
2. Ease the connecting rod and piston assemblies back into the cylinder liners.

NOTE:

- **If new shell bearings are to be fitted, always follow the selection process described elsewhere in this section.**
- **The bearing shells are keyed and can only be fitted one way.**

3. Fit the shell bearings to the crankcases and connecting rods.
4. Lubricate the surfaces of the bearing shells with a 50/50 solution of engine oil and molybdenum disulphide grease.
5. Ensure that the crankshaft is clean and that the oil-ways within the crankshaft are free from blockages and debris.
6. Refit the crankshaft to the crankcase.

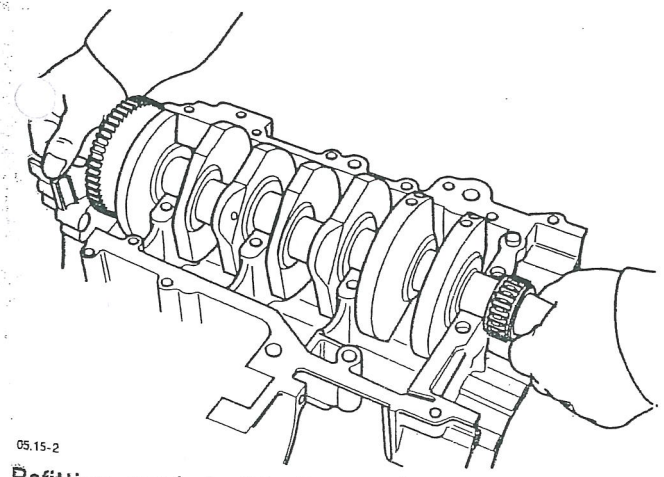

05.15-2

Refitting crankshaft to the crankcase

7. Align the connecting rods to the crankshaft journals.

NOTE:

- **Ensure that the big ends and big end caps are assembled as a matched pair.**

8. Fit the big end caps.

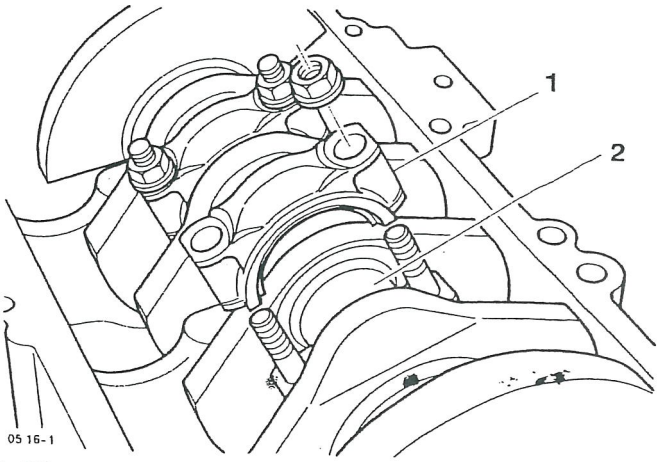

1. Big end cap

2. Crankpin

9. Lubricate the threads and the face of the nuts with molybdenum disulphide grease.
10. Fit the big end nuts and tighten progressively in two stages:

CAUTION: The torque characteristics of the connecting rod nuts and bolts are sensitive to the rate at which they are tightened. If all the torque is applied in one action the bolt may be stretched and the nut could become loose when in service, resulting in severe engine damage

1st stage – Torque to **20 Nm.**

NOTE:

- **To accurately gauge the 120° turn fit the torque turn gauge between the socket and drive handle. Place the socket to the big end nut. Pick an increment point on the torque turn gauge which aligns with a suitable reference point. Tighten the bolts until 12 of the 10° gauge increments have rotated past the chosen point.**

2nd stage – Tighten the nut through **120°**.

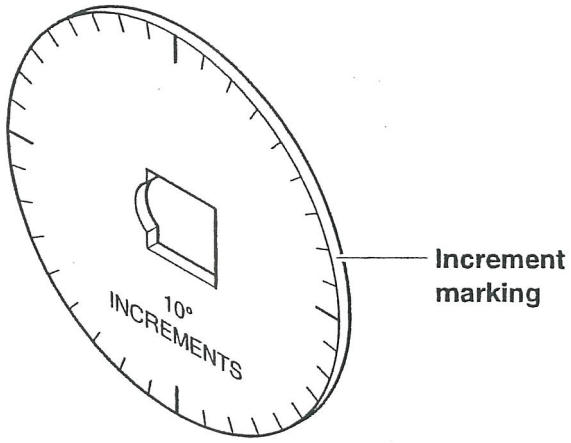

05.16-2

Service tool 3880105-T0301

11. Assemble crankcase upper and lower halves as described earlier in this section.
12. Rotate the crankshaft clockwise. Check for tight spots and rectify as necessary.
13. Refit the:

- Cam chain.
- Camshaft cover.
- Engine into the frame.

Refer to the relevant sections for replacement procedures.

CONNECTING RODS

Removal

NOTE:

- **Connecting rods may be removed after first removing:**
- The engine from the frame.
- The cylinder head.
- Separating the crankcase upper and lower halves.

Refer to the relevant sections for removal procedures.

1. Mark each big end cap and connecting rod to identify both items as a matched pair and their orientation to each half.

NOTE:

- **It may be necessary to gently strike the big end cap with a rubber mallet to release the cap from the bolts.**

2. Release the nuts securing the big end cap to the connecting rod and remove the big end cap. Ensure that one half of the bearing shell remains in the big end cap and one half remains in the connecting rod. Discard the nuts.

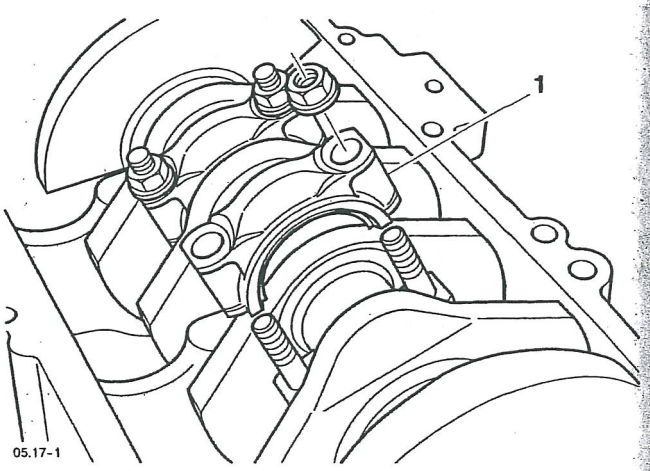

05.17-1

1. Big end cap

3. Push the connecting rod up through the liner and remove the piston and connecting rod assembly.
4. Remove a gudgeon pin circlip, detach the gudgeon pin and piston from the connecting rod.
5. Label the assembly to identify the cylinder from which it was removed.
6. Repeat steps 1 to 5 for each cylinder.

7. Remove and discard the big end bolts.

NOTE:

- **Prior to removal, mark each liner to identify correct orientation and the cylinder from which it was removed.**

8. Remove the cylinder liners using service tool part number T3880315, fitted with adapter T3880316, as described later in this section.

Inspection

NOTE:

- **Connecting rod nuts and bolts are treated with an anti-rust solution which must not be removed.**
- **Clean the connecting rod with high flash point solvent.**

1. Remove all bearing shells and inspect for damage, wear, overheating (blueing) and any other signs of deterioration. Fit a new set of big end bearing shells if damage, wear, overheating or deterioration is found.

Installation

1. Lubricate the gudgeon pin with a 50/50 solution of engine oil and molybdenum disulphide grease and assemble to the connecting rod and piston.

NOTE:

- **Ensure the piston is fitted correctly to the connecting rod (small dimple in the piston crown towards the front with the connecting rod stamp (e.g. C4) also towards the front).**

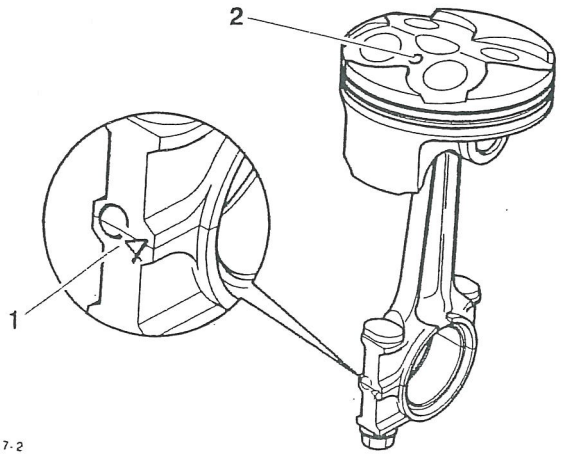

05.17-2

1. Connecting rod stamp
2. Small dimple

2. Retain the gudgeon pin with new circlips.
3. Fit new bolts to the connecting rod.

> ⚠ **CAUTION: Never re-use connecting rod nuts or bolts. If the connecting rod cap is disturbed, always discard the nuts and bolts and fit new ones. Using the original nuts and bolts may lead to severe engine damage.**

4. Arrange the piston rings as shown below:

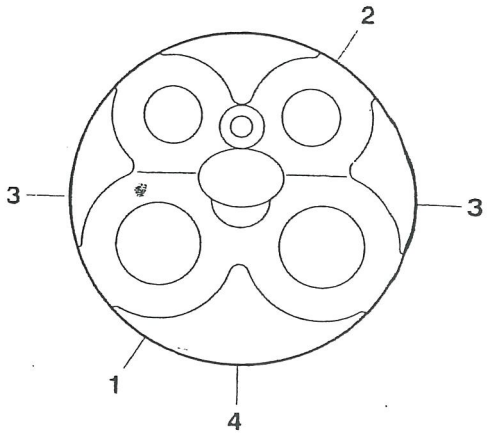

05.18-1

1. Top ring
2. Second ring
3. First oil ring
4. Oil Scraper

5. Fit the piston and connecting rod assembly (piston crown first) into the lower end of the cylinder liner from which it was removed. Use a gentle rocking motion to engage the rings into the bore.
6. Fit the selected bearing shells to the connecting rods and caps.

CAUTION: Always check the bearing journal clearance, as described later in this section, before final assembly of the crankshaft. Failure to select the correct crankshaft bearing shells will result in severe engine damage.

NOTE:

- **If a new set of bearing shells are being fitted, use the selection processes detailed later in this section.**
- **Avoid touching any bearing surface of the bearing shells with the hand.**

7. Lubricate the surfaces of the bearing shells with with a 50/50 solution of engine oil and molybdenum disulphide grease.

8. Apply silicone sealer to the cylinder liner/crankcase mating surface (see earlier in this section for sealer areas).

NOTE:

- **Silicone sealant 'Three Bond 1216' is used at the factory.**

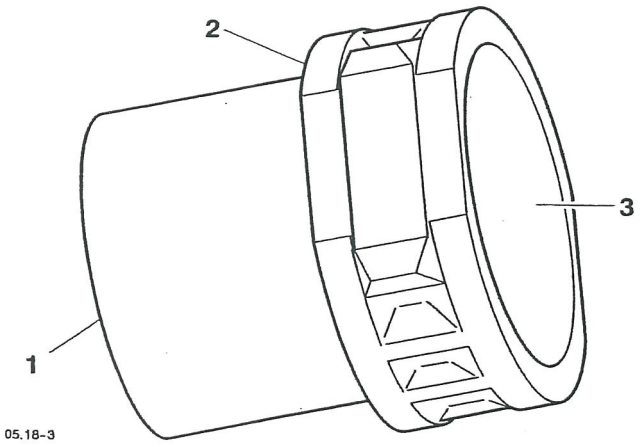

05.18-3

1. Chamfered end

2. Sealer area

3. Cylinder liner

9. Fit the piston, connecting rod and liner assembly into the crankcase in the same location as prior to removal.

NOTE:

- **Ensure that the piston faces the front of the engine (small dimple in the piston crown towards the front).**

NOTE:

- **Ensure that the cylinder liners are square to each other with a minimum gap of 0.1mm between each liner.**

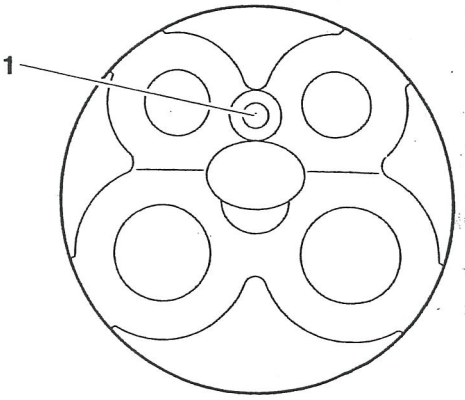

05.19-1

1. Dimple (faces forward)

10. Align the connecting rod to the crankshaft and fit the big end cap in the same orientation as noted during removal.

11. Lubricate the threads and face of the big end nuts with molybdenum disulphide grease.

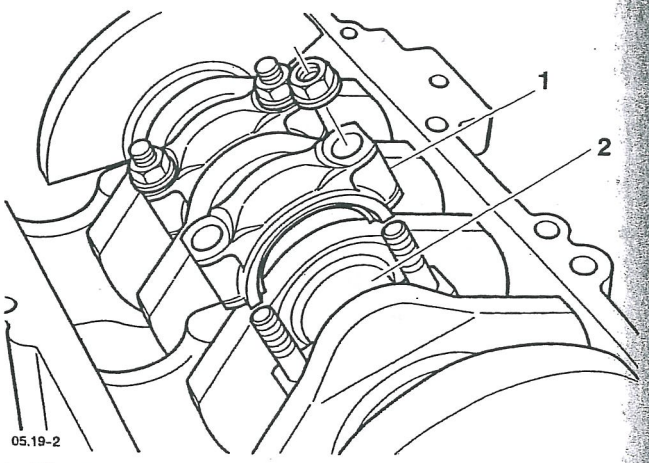

05.19-2

1. Big End

2. Crankpin

12. Fit the nuts and tighten progressively in two stages:

> **CAUTION: The torque characteristics of the connecting rod nuts and bolts are sensitive to the rate at which they are tightened. If all the torque is applied in one action the bolt may be stretched and the nut could become loose when in service, resulting in severe engine damage**

1st stage – Torque to **20 Nm.**

NOTE:

- **To accurately gauge the 120° turn fit the torque turn gauge between the socket and drive handle. Place the socket to the big end nut. Pick an increment point on the torque turn gauge which aligns with a suitable reference point. Tighten the bolts until 12 of the 10° gauge increments have rotated past the chosen point.**

2nd stage – Tighten the nut through a further **120°.**

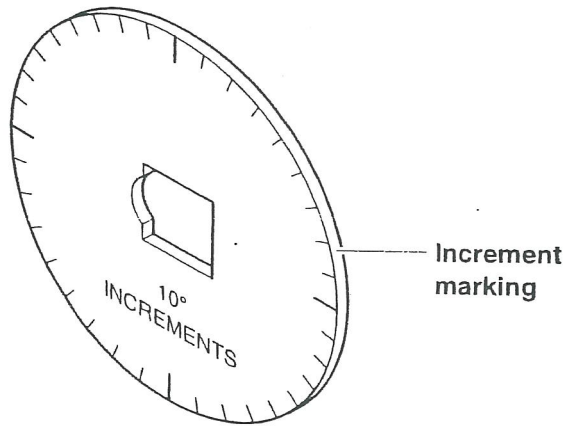

Service tool 3880105-T0301

13. Repeat steps 1 to 11 for the other three cylinders.
14. Assemble crankcase upper and lower halves, as described earlier in this section.
15. Rotate the crankshaft clockwise. Check for tight spots and rectify as necessary
16. Refit the:

- Cylinder head
- Engine into the frame.

Refer to the relevant sections for assembly procedures.

CONNECTING ROD BIG END BEARING SELECTION / CRANKSHAFT JOURNAL WEAR CHECK

Measure the connecting rod big end bearing and crankshaft journal clearance as follows:

NOTE:

- **The crankshaft journal clearances are measured using 'Plastigauge' (Triumph part number 3880150-T0301).**
- **Do not turn the connecting rod and crankshaft during the clearance measurement as this will damage the Plastigauge.**

1. Remove the big end cap from the crankshaft journal to be checked.
2. Wipe the exposed areas of the crankshaft journal and the bearing face inside the big end cap.
3. Apply a thin smear of grease to the crankshaft journal and a small quantity of silicon release agent to the bearing.
4. Trim a length of the Plastigauge to fit across the crankshaft journal. Fit the strip to the crankshaft journal using the grease to hold the Plastigauge in place.
5. Lubricate the threads and face of the nuts with molybdenum disulphide grease. Refit the bearing and big end cap and tighten the big end nuts as described earlier.
6. Release the nuts and remove the big end cap.
7. Using the gauge provided with the Plastigauge kit, measure the width of the compressed Plastigauge.

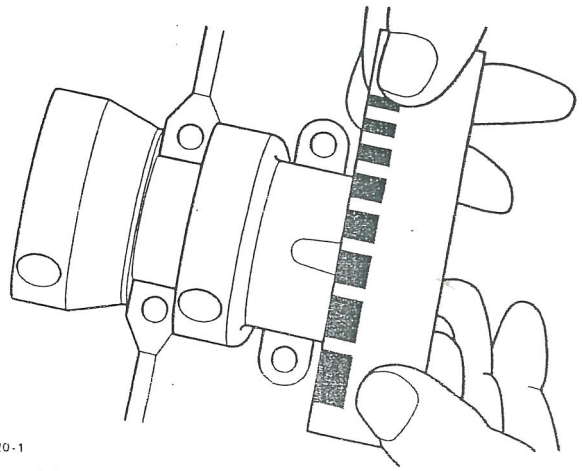

1. Checking the Measured Plastigauge.

Connecting rod big end bearing and crankshaft journal clearance

Standard	**0.031 – 0.059 mm**
Service limit	**0.07 mm**

If the measured clearance exceeds the service limit, measure the crankshaft journal diameter.

Crankshaft journal diameter

Standard	**29.984-30.000 mm**
Service limit	**29.960 mm**

NOTE:

- **If any crankshaft journal has worn beyond the service limit, the crankshaft must be replaced. Due to the advanced techniques used during manufacture, the crankshaft cannot be reground and no oversize bearings are available.**

CONNECTING ROD BEARING SELECTION

Minor differences in connecting rod dimensions are compensated for by using selective bearings.

Select the correct big end bearing shell as follows:

1. Measure each crankshaft journal diameter.

NOTE:

- **Connecting rod marks are an ink stamp which will be prefixed by a letter (e.g.. C4).**

2. Check the connecting rod for either a 4 or 5 mark.
3. Measure the internal diameter of the connecting rod big end (bearings removed).
4. Select the correct bearings by matching the information found with the chart below.

Connecting rod big end bearing selection chart (mm's)

Shell Colour	White	Red		Blue
Rod marking	5	5	4	4
Crankshaft journal diameter range	30.000 29.995	29.994 29.984	30.000 29.995	29.994 29.984
Connecting rod big end diameter range	33.008 33.000	33.008 33.000	33.018 33.009	33.018 33.009
Running clearance range	0.031 0.059			

For example:

Connecting rod mark - 5
Crankshaft journal diameter - 29.987
Connecting rod internal diameter - 33.005
Required bearing - Red

NOTE:

- **Repeat measurement for all connecting rods and their respective crankshaft journals.**
- **It is normal for the bearings selected to differ from one connecting rod to another.**

5. Install the new bearings in the connecting rod.
6. Check the running clearance using the Plastigauge method.

CAUTION: Always confirm, using the Plastigauge method, that the running clearance is correct before final assembly. Severe engine damage could result from incorrect clearance.

CRANKSHAFT MAIN BEARING/JOURNAL WEAR CHECK

NOTE:

- **Minor differences in connecting rod dimensions are compensated for by using selective bearings.**

Select the correct big end bearing shell as follows:

1. Measure the bearing to crankshaft main journal clearance using Plastigauge (Triumph part number 3880150-T0301). Use the method described in connecting rod clearance measurement.

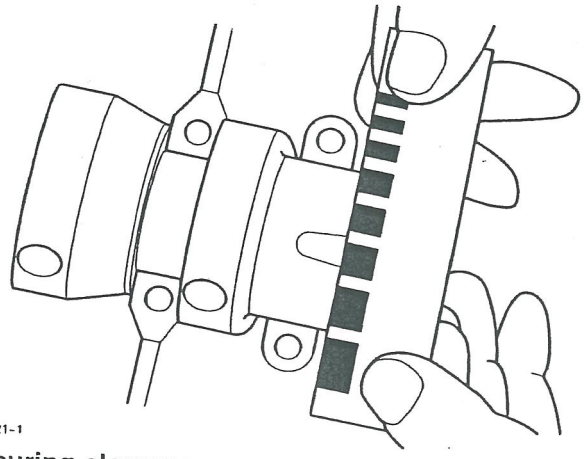

05.21-1

Measuring clearances

Bearing Clearance

Standard	**0.014-0.042 mm**
Service limit	**0.070 mm max**

2. If the clearance exceeds the service limit, measure the diameter of the crankshaft main journal.

Crankshaft main journal diameter:

Standard	**29.984-30.00 mm**
Service limit	**29.960 mm**

NOTE:

- **If any crankshaft main journal has worn beyond the service limit, the crankshaft must be replaced.**

Main Bearing selection chart (all dimensions in mm's)

Engines built UP TO engine number 104342 or earlier						
Shell Colour	White	Red		Blue		Green
Crankcase bore range	32.966 32.951	32.969 32.960	32.960 32.951	32.978 32.969	32.969 32.960	32.978 32.969
Journal diameter range	30.000 29.995	30.000 29.995	29.994 29.984	30.000 29.995	29.994 29.984	29.994 29.984
Running clearance range	0.042 0.014					
Engines built FROM engine number 104343 to 181049						
Shell Colour	White	Red		Blue		Green
Crankcase bore range	32.966 32.959	32.966 32.959	32.974 32.967	32.978 32.975	32.972 32.967	32.978 32.973
Journal diameter range	30.000 29.991	29.990 29.984	30.000 29.991	30.000 29.991	29.990 29.984	29.990 29.984
Running clearance range	0.048 0.024					
Engines built FROM engine number 181050 or later						
Shell Colour	White	Red		Blue		Green
Crankcase bore range	32.966 32.959	32.966 32.959	32.974 32.967	32.978 32.975	32.972 32.967	32.978 32.973
Journal diameter range	29.995 29.986	29.985 29.979	29.995 29.985	29.995 29.986	29.985 29.979	29.986 29.979
Running clearance range	0.053 0.029					

Select the bearings as follows:

CAUTION: Use of an incorrect bearing selection chart could lead to severe engine damage.

1. Measure and record the diameter of each crankshaft main bearing journal.
2. Measure and record the diameter of the bores in the crankcase (with the bearings removed).
3. Compare the data found for each corresponding journal/bore with the chart above and select bearings, journal by journal.

NOTE:

- **It is normal for the bearings selected to differ from one journal to another.**

4. After selection and fitment, confirm the running clearance of **EVERY** journal using the Plastigauge method described elsewhere in this section.

CAUTION: Always confirm, using the Plastigauge method, that the running clearance is correct before final assembly. Severe engine damage could result from incorrect clearance.

Crankshaft End Float

Standard	**0.050 – 0.200 mm**
Service limit	**0.40 mm**

NOTE:

- **Crankshaft end float is controlled by the tolerances in crankshaft and crankcase machining. No thrust washers are used. If crankshaft end float is outside the specified limit, the crankshaft and /or crankcase must be replaced.**

PISTONS

Disassembly

NOTE:

- **The pistons may be removed after first removing the cylinder head and cylinder liners. It is not necessary to remove the connecting rods from the crankshaft. Refer to the relevant sections for removal procedures.**

1. Turn the crankshaft until the piston to be removed is at TDC.

NOTE:

Place a cloth between the piston and crankcase to ensure the circlip does not fall into the crankcase

2. Remove the gudgeon pin circlip from one side of the piston. Discard the circlip.

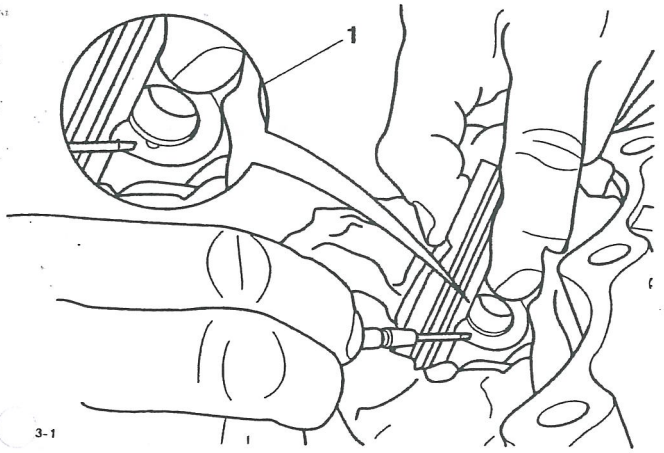

Gudgeon pin removal

CAUTION: Never force the gudgeon pin through the piston and connecting rod. This may cause damage to the piston which also may damage the cylinder liner when assembled.

NOTE:

- If the gudgeon pin is found to be tight in the piston, check the piston for a witness mark caused by the circlip. Carefully remove the mark to allow the gudgeon pin to be removed.
- If the gudgeon pin will not move then the crankcase will have to be split and the connecting rod removed.

3. To remove the gudgeon pin, push the pin through the piston and connecting rod toward the side from which the circlip was removed.
4. Withdraw the piston from the connecting rod.
5. Remove the remaining circlip and discard.
6. Measure the piston bore diameter and the gudgeon pin diameter.

Gudgeon pin to piston bore service limits

Gudgeon pin diameter (mm)	**Standard**	**14.995 - 15.000**
	Service limit	**14.985**
Piston pin diameter (mm)	**Standard**	**15.004 - 15.012**
	Service limit	**15.051**
Clearance (mm)	**Standard**	**0.004 - 0.017**
	Service limit	**0.066**

7. Replace the piston and/or gudgeon pin if found to be outside the specified service limits.

NOTE:

- **Piston rings must be removed from the piston using hand pressure only.**

8. Remove the piston rings

Inspection

Piston wear check

1. Measure the piston outside diameter between 3 and 14 mm up from the bottom of the skirt. Measure at 90° from the direction of the gudgeon pin.

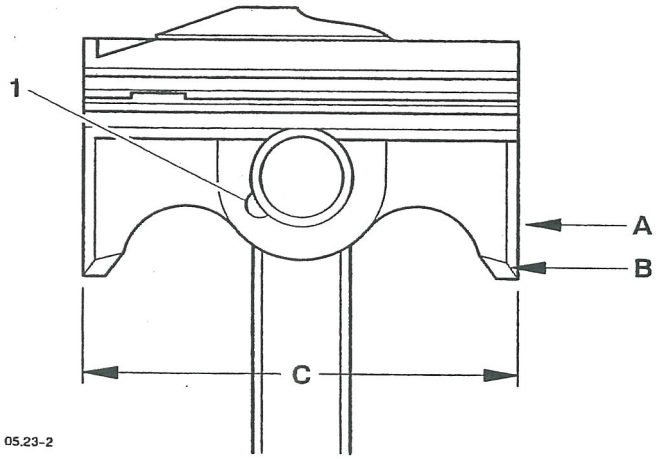

1. Circlip removal groove

A = 14 mm from skirt bottom

B = 3 mm from skirt bottom

C = Piston outside diameter

Piston outside diameter:

Standard	**67.990 +/- 0.005 mm**
Service limit	**67.91 mm**

NOTE:

- **Replace the piston if the measured diameter falls outside the specified limit.**

Piston Ring Gap

NOTE:

- **Check the piston ring gap in the cylinder liner to which the piston ring will be fitted to on assembly.**

1. Place a piston ring in the top of cylinder liner.
2. Using the piston crown, push the piston ring into the top of the cylinder liner (the piston will hold the piston ring square).
3. Continue to push the piston into the bore until the third groove of the piston is level with the top of the liner.
4. Remove the piston and measure the gap between the ends of the piston ring, using a feeler gauge.

Piston ring gap tolerances (standard)

Top	**0.15 - 0.30 mm**
Second	**0.25 - 0.40 mm**
Oil Control	**0.20 - 0.70 mm**

Piston ring gap tolerances (service limits)

Top	**0.60 mm**
Second	**0.75 mm**
Oil Control	**Not applicable**

5. (a) If the piston ring gap is too large, replace the piston rings with a new set

   (b) If the gap remains too large with new piston rings, both the piston and cylinder liner must be replaced.

   (c) If the gap is too small, check the piston and liner for distortion, replacing as necessary. **Do not file piston rings!**

Piston Rings/Ring Grooves

1. Check the pistons for uneven groove wear by visually inspecting the ring grooves.
2. If all the rings do not fit parallel to the groove upper and lower surfaces, the piston must be replaced.
3. Clean the piston ring grooves.
4. Fit the piston rings to the piston. Check, using a feeler gauge, for the correct clearance between the ring grooves and the rings:

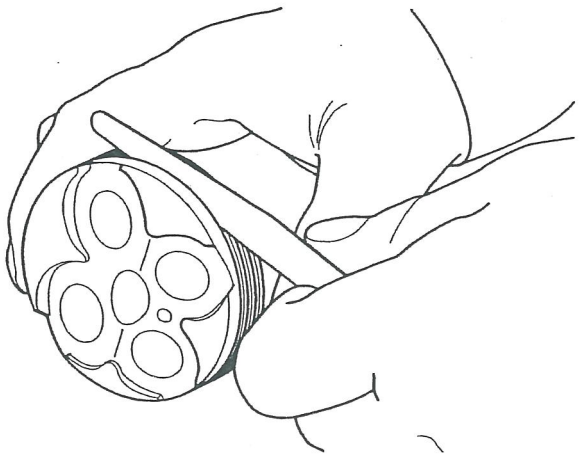

05.24-1

Checking ring-groove clearance

Piston ring/Groove clearance (standard)

Top	0.02 - 0.03 mm
Second	0.02 - 0.06 mm

Piston ring/Groove clearance (service limits)

Top	0.16 mm
Second	0.16 mm

Replace the piston and rings if outside the specified service limit.

Assembly

1. Thoroughly clean the piston ring grooves and fit the piston rings to the pistons.

NOTE:

- **The top ring upper surface is marked with a 'N' and has a chamfer on the inside edge.**
- **The second ring upper surface is also marked with a 'N' but has no chamfer on it's inside edge.**
- **The oil control rings can be fitted with either face uppermost.**

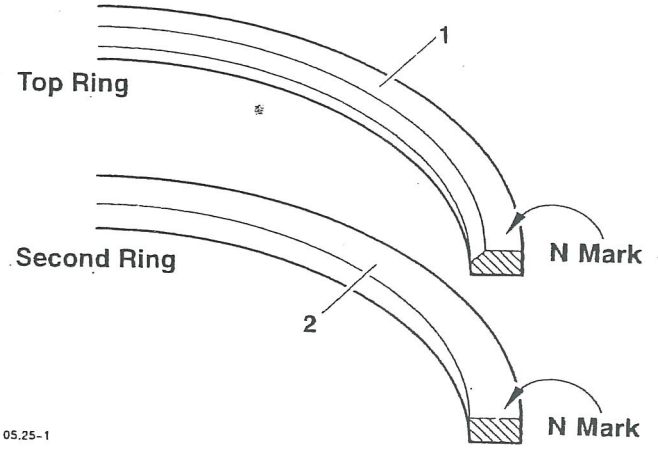

05.25-1

WARNING: Failure to use new gudgeon pin circlips could allow the gudgeon pin to detach from the piston. This could seize the engine and lead to an accident.

NOTE:

- **Fit the circlip to pistons 1 and 4 on the side which will be outermost in the engine when fitted to the connecting rod.**

2. Fit a new circlip to the piston. Ensure the new circlip is correctly fitted into it's groove.

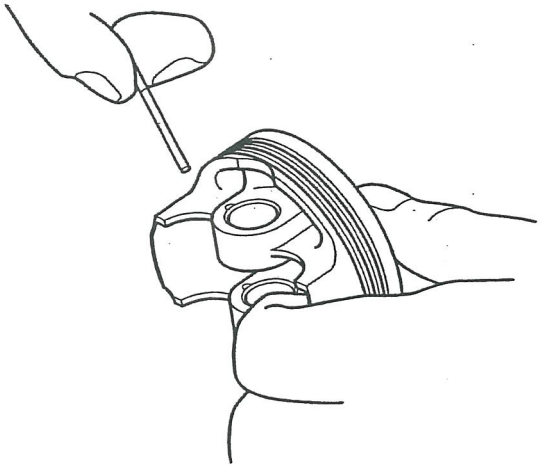

05.25-2

1. Circlip fitment

3. Lubricate the piston, connecting rod small end and the gudgeon pin with a 50/50 solution of engine oil and molybdenum disulphide grease.

NOTE:

- **Ensure that the small dimple on the piston crown faces to the front of the engine.**

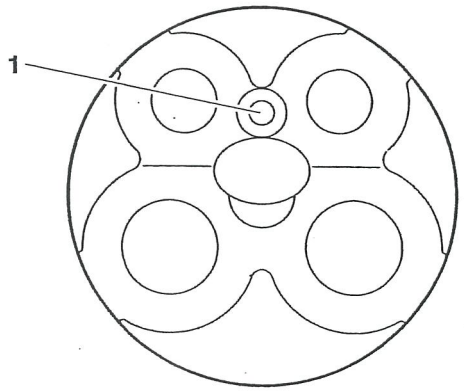

05.25-3

1. Dimple (faces forward)

4. Place the piston to the connecting rod small end.

NOTE:

- **Use a clean cloth between the piston and cylinder liner to prevent any items falling into the crankcase.**

5. Align the small end of the connecting rod with the gudgeon pin hole in the piston.

WARNING: Failure to use new gudgeon pin circlips could allow the gudgeon pin to detach from the piston. This could seize the engine and lead to an accident.

6. Fit the gudgeon pin.

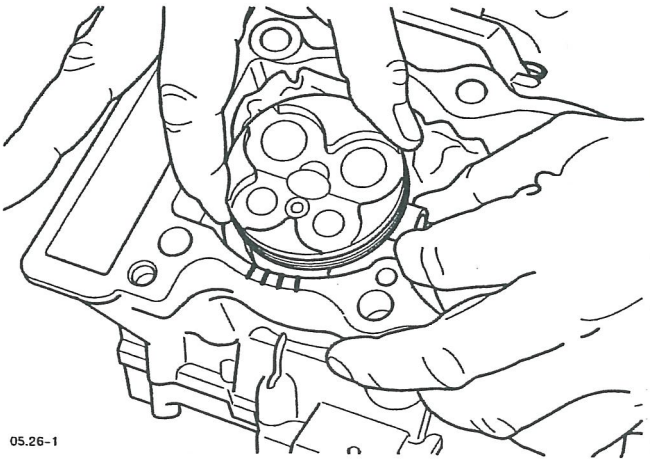

05.26-1

Gudgeon pin alignment

7. Fit the remaining new circlip to the piston. Ensure the new circlip is correctly fitted into its groove.

8. Arrange the piston rings as follows (piston viewed from above with the small dimple at the top):

NOTE:

- **The top piston ring gap should be in the 7 o'clock position.**
- **The second piston ring gap should be in the 1 o'clock position.**
- **The steel oil control ring gaps should be in the 3 and 9 o'clock positions (one in each position).**

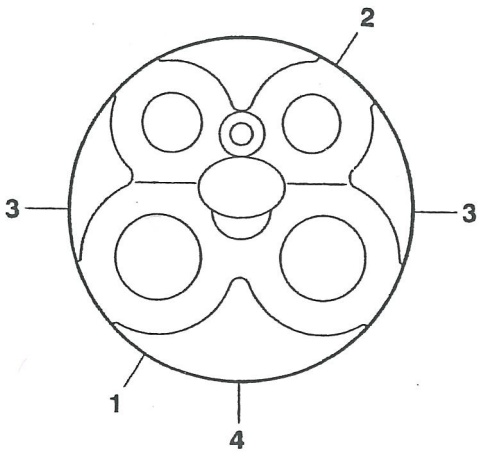

05.26-3

1. Top Ring

Second Ring

3. Steel Oil Control Rings

4. Oil Control Ring Expander

9. Repeat steps 2 to 8 for the remaining pistons.
10. Refit the cylinder liners as described later in this section.
11. Refit the cylinder head as described earlier in this section.

CYLINDER LINERS

Removal

NOTE:

- **The cylinder liners may be removed after first removing the cylinder head. Refer to the relevant section for removal procedures.**

1. Mark each cylinder liner to identify correct orientation and the cylinder number from which it will be removed.
2. Turn the crankshaft until the piston in the cylinder liner to be removed is at bottom dead centre.
3. Assemble service tool T3880315, with adapter T3880316.
4. Check that the locking nut on the service tool is loose, then unscrew the extraction nut.

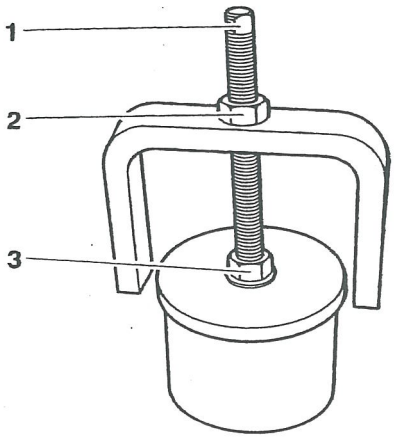

05.27-2

1. Service Tool T3880315

2. Extraction Nut

3. Locking Nut

CAUTION: The cylinder liners are made of aluminum alloy and can be easily damaged. Handle with care, ensuring the cylinder liner bore is not scratched.

NOTE:

- **Ensure adapter T3880316 is fitted to the service tool.**

5. Carefully fit the service tool fully in to the cylinder liner bore and position the legs of the service tool on the crankcase.

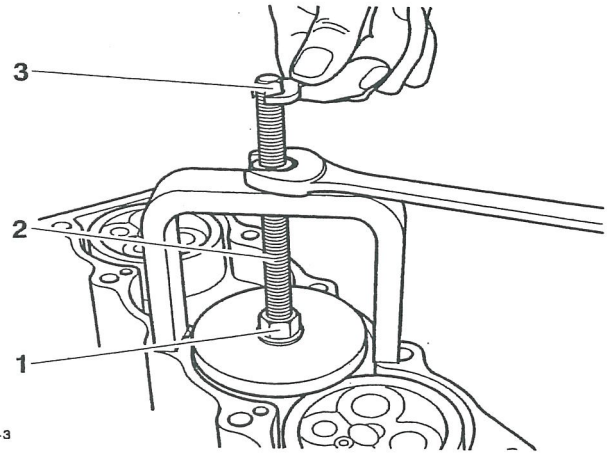

05.27-3

1. Locking nut

2. Bolt

3. Flats to locate a wrench

6. Hold the tool's threaded stud with a wrench and turn the locking nut, on the service tool, clockwise until the rubber sleeve on the service tool tightly grips the bore of the cylinder liner.

NOTE:

- **To avoid slipping off, the locking nut must be very tight.**
- **As the extractor rubber becomes compressed, apply gentle downward pressure to ensure the full depth of the rubber is inside the liner during extraction.**

7. Check that the service tool legs are positioned to allow movement of the cylinder liner.

8. Support the tool and turn the extraction nut clockwise to lift the cylinder liner 4 to 6 mm (this will break the silicone seal between the crankcase and the cylinder liner).

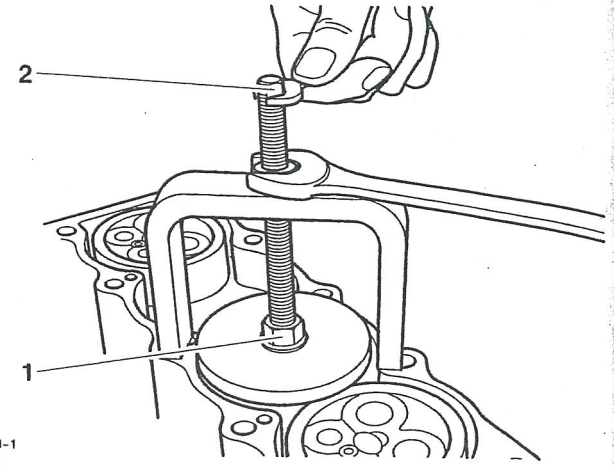

05.28-1

1. Extraction nut

2. Flats

9. Turn the locking nut anti-clockwise to release the cylinder liner.

10. Remove the service tool.

CAUTION: Take care, when removing the cylinder liner, to ensure that the piston is not allowed to fall against the inside of the crankcase. Piston damage could result if allowed to contact the crankcase

11. Withdraw the cylinder liner from the crankcase by hand while supporting the piston.

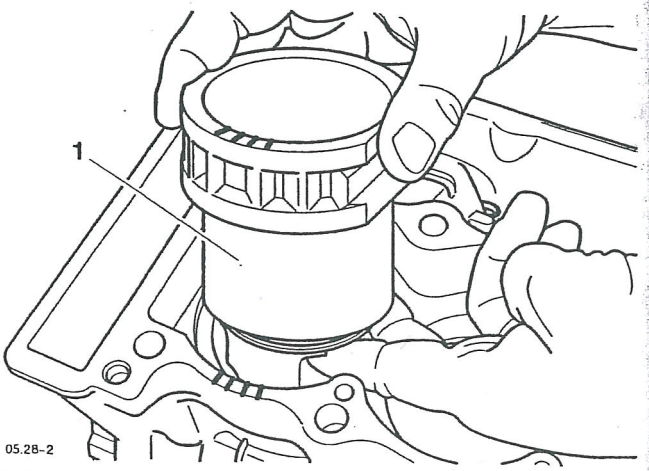

05.28-2

1. Cylinder withdrawal

12. Repeat steps 4 to 11 for second piston at bottom dead centre.

13. Rotate the crankshaft until the remaining two pistons are at bottom dead centre.

14. Repeat steps 4 to 11 for each remaining cylinder liners and pistons.

Inspection

1. Measure the diameter of each cylinder liner using an internal micrometer or similar accurate measuring equipment.

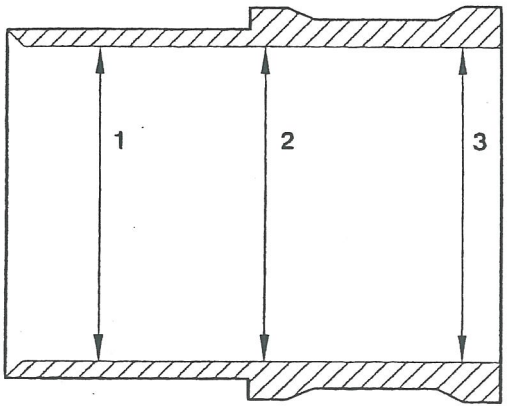

05.28-3

Cylinder bore diameter

Standard	**68.000 - 68.015 mm**
Service limit	**68.05 mm**

NOTE:

- **Check the diameter at points 1, 2 and 3.**
- **If any reading is outside the specified limits, replace the cylinder liner and piston.**

Installation

1. Thoroughly clean each cylinder liner, removing all traces of the silicon sealant.

2. Remove all traces of silicone sealant from the crankcase.

3. Apply silicone sealant to a cylinder liner/crankcase mating surface.

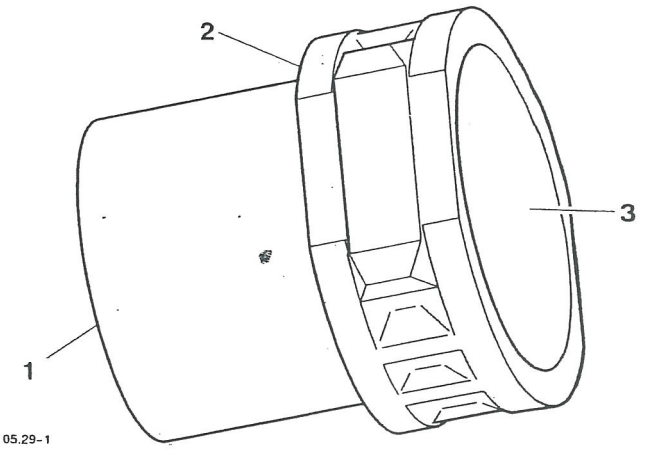

05.29-1

1. Chamfered End

2. Sealant area

3. Cylinder Liner

NOTE:

- **Silicone sealant 'Three Bond 1216' is used at the factory.**
- **The cylinder liners have a chamfer at the bottom of the bore to enable the fitment of the piston with out the need for a piston ring compressor.**
- **Ensure the correct cylinder liner is fitted to the piston from which it was removed.**

4. Noting the position and orientation from removal, locate the cylinder liner to its corresponding piston (which must be at TDC).

5. Insert the cylinder liner over the piston using a gentle rocking motion to allow compression of the piston rings.

NOTE:

- **When a cylinder liner has been installed it should not be disturbed. If it is necessary to remove a cylinder liner after fitting, sealant must be re-applied.**

6. Push the cylinder liner into the crankcase until fully seated.

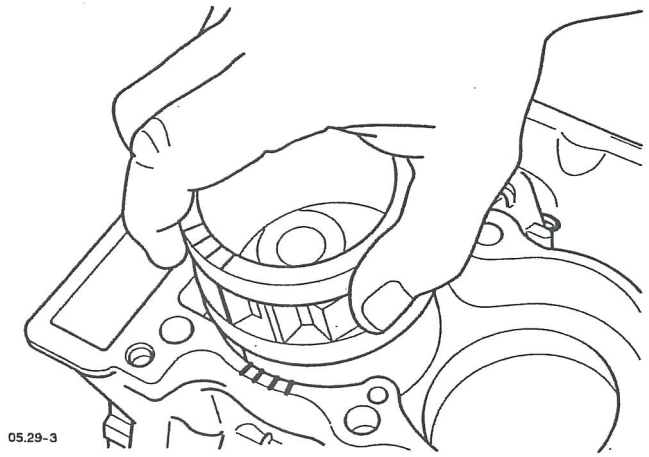

Refitting a cylinder liner

7. Repeat steps 3 to 6 for the other piston at TDC.
8. Rotate the engine until the two remaining pistons are at TDC
9. Repeat steps 3 to 6 for each remaining cylinder liner and piston.
10. Refit the cylinder head as described earlier in this section.

TRANSMISSION

CONTENTS

	Page
Exploded View - Input and Output Shafts	6.2
Exploded View - Sprag	6.3
Exploded View - Gear Change Mechanism	6.4
Exploded View - Gear Selector Mechanism	6.5
Selector Shaft, Selector Forks & Drum	6.6
Removal	6.6
Gear selector fork thickness	6.8
Gear selector groove width	6.8
Selector fork to groove clearance	6.8
Installation	6.8
Input And Output Shaft Assemblies	6.11
Removal	6.11
Installation	6.11
Input Shaft	6.12
Disassembly	6.12
Assembly	6.12
Output Shaft	6.14
Disassembly	6.14
Inspection	6.15
Assembly	6.16
Sprag Clutch	6.18
Removal	6.18
Inspection	6.18
Installation	6.19

Exploded View, Input and Output Shafts

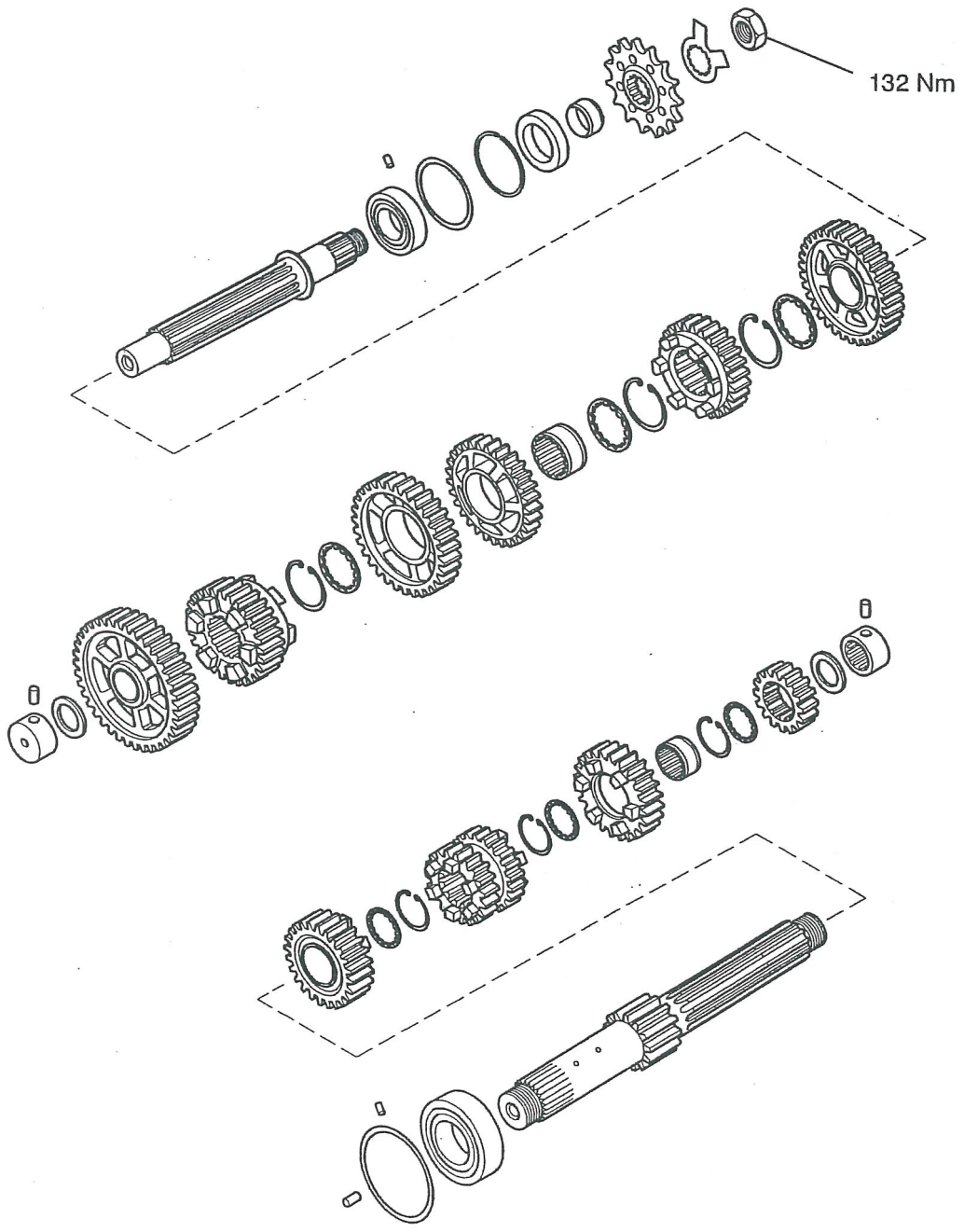

Exploded View, Sprag

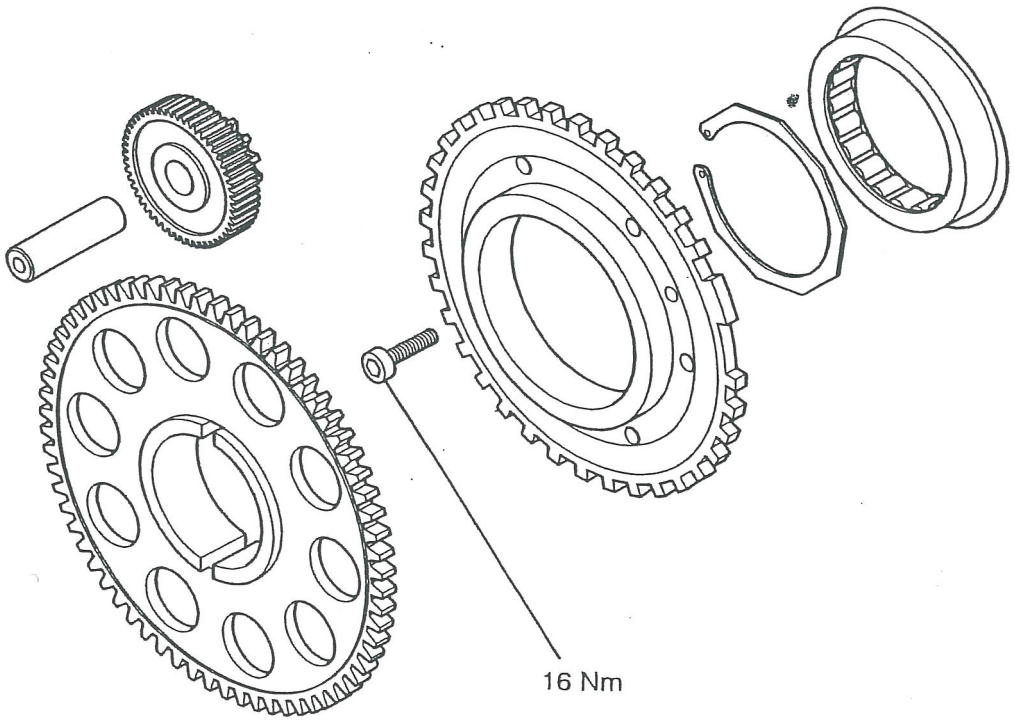

Exploded View, Gear Change Mechanism

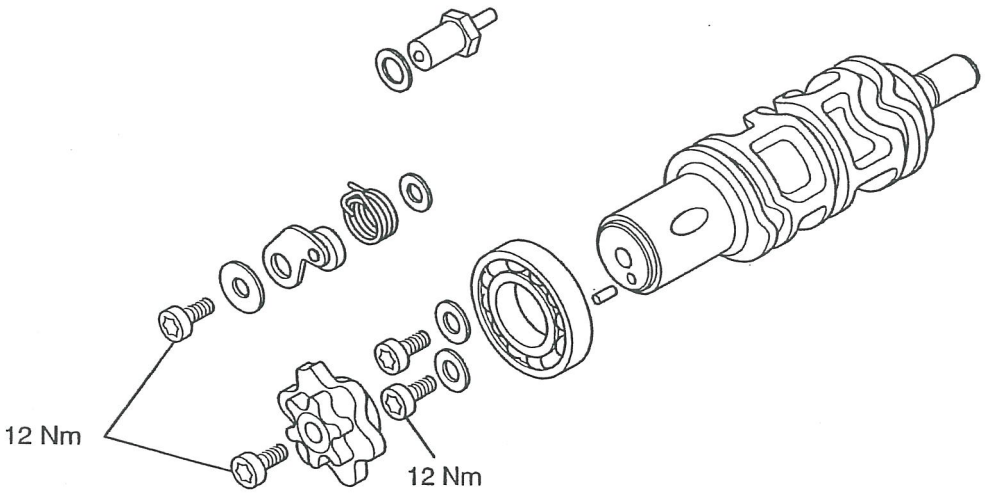

Exploded View, Gear Selector Mechanism

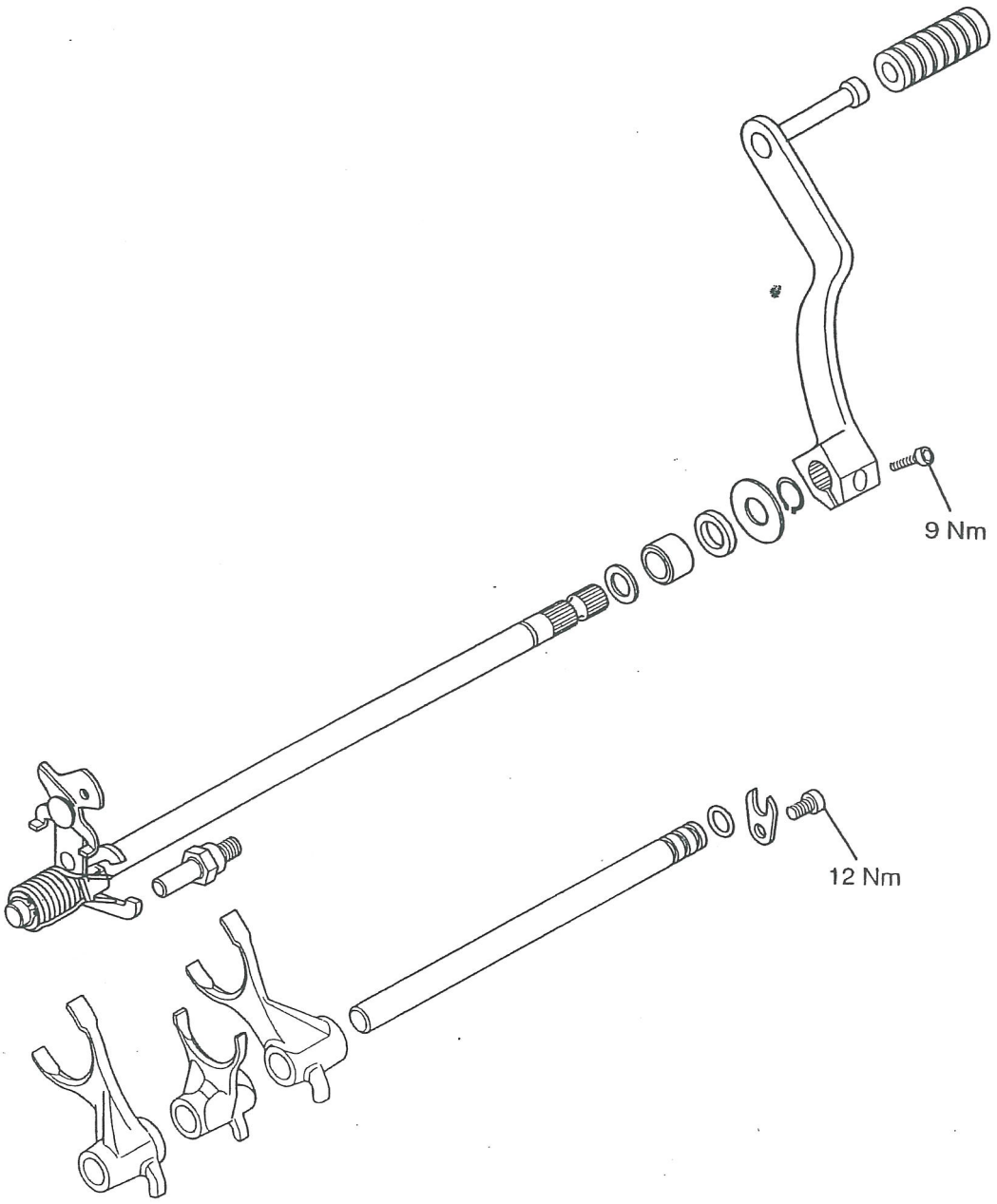

SELECTOR SHAFT, SELECTOR FORKS & DRUM

Removal

NOTE:

- **In order to remove the selector mechanism, the engine must first be removed from the frame and the two halves of the crankcase separated. Refer to the relevant sections for removal procedures.**

1. Remove the input and output shafts from the crankcase as described elsewhere in this section.

2. Remove the capscrew and take out the 'U' shaped keeper plate from the selector shaft. Discard the capscrew.

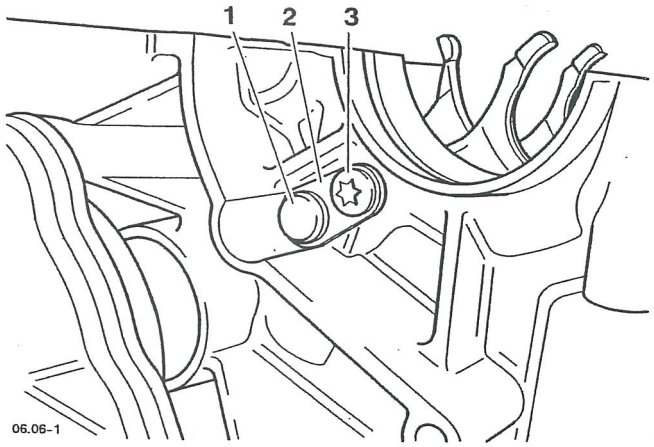

1. Selector shaft
2. Keeper plate
3. Capscrew

CAUTION: The selector forks can be fitted incorrectly. Ensure the position and orientation of the selector forks are marked prior to removal. Incorrect fitting of the selector forks will cause gearbox damage.

NOTE:

- **The centre selector fork locates in the selector drum as shown below:**

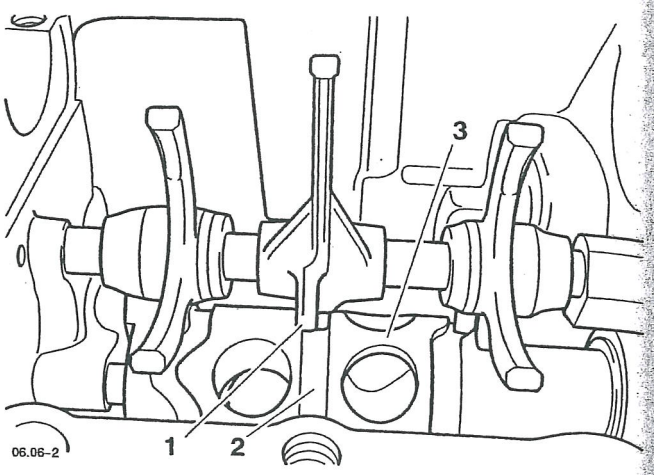

1. Selector fork stop
2. Selector fork drum guide
3. Selector drum

3. Using a suitable tool, push the selector shaft out from the crankcase in the direction of the keeper plate. Collect each selector fork as they are released by the selector shaft.

4. If not already removed, note the position and orientation of the gear pedal in relation to the shaft, then remove the pedal.

5. Remove the circlip and washer from the gear pedal end of the gear change shaft.

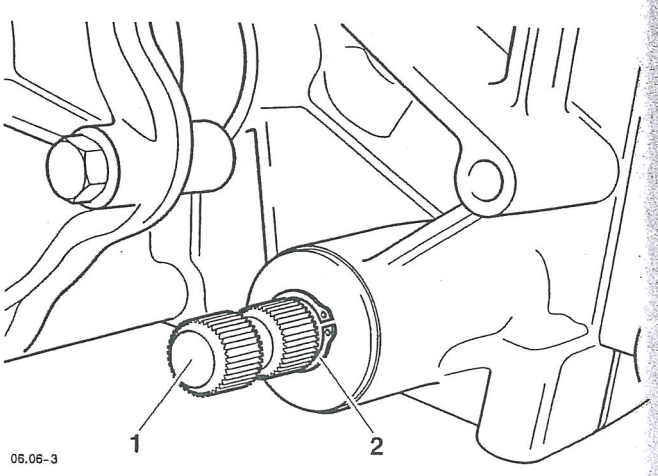

1. Gear change shaft
2. Circlip

6. Withdraw the gear change shaft from the clutch end of the crankcase.

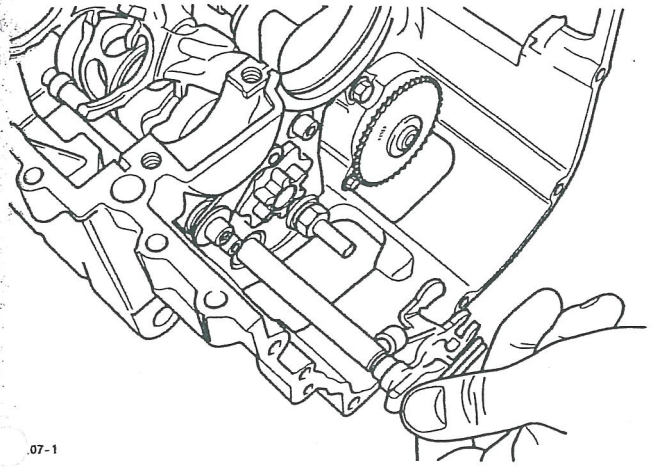

.07-1

Gear change shaft removal

NOTE:

- **The detent arm is held in position under spring pressure.**
- **Prior to removal, note the orientation of the detent arm, capscrew, collar, spring and washer. The same orientation must be retained on assembly.**

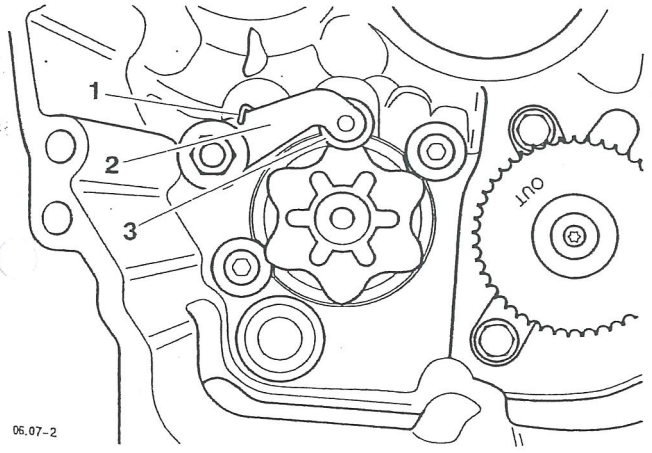

06.07-2

1. Spring
2. Detent arm
3. Detent wheel

7. Release and remove the capscrew securing the detent arm.

8. Withdraw the detent arm complete with it's collar, spring and washer. Discard the capscrew.

9. Release and remove the bolts securing the selector drum bearing to the crankcase. Discard the bolts.

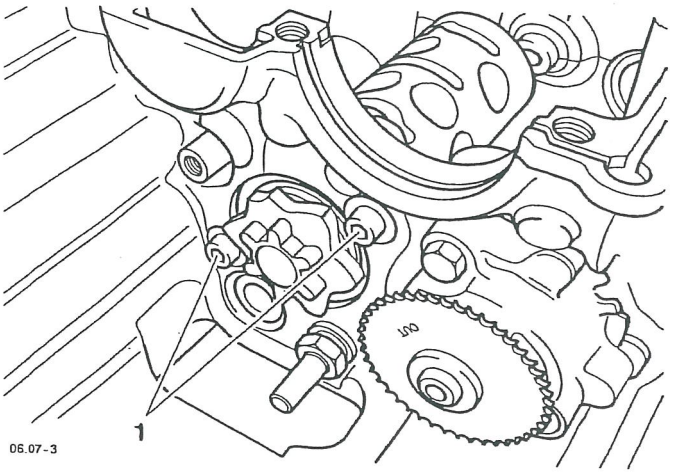

06.07-3

1. Bolts

10. Withdraw the selector drum complete with the detent wheel and bearing from the clutch end of the crankcase.

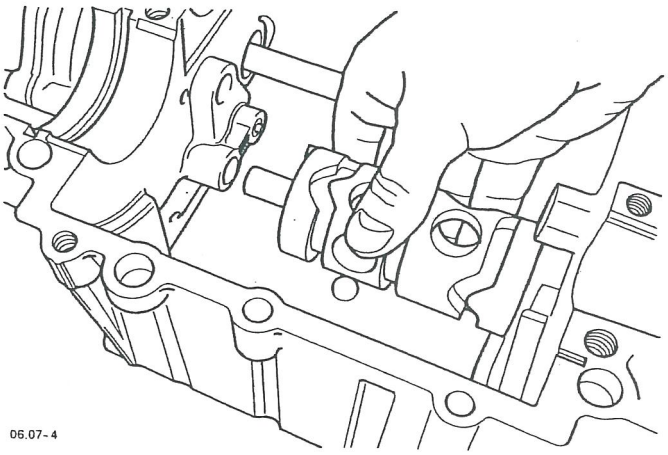

06.07-4

Selector drum removal

11. To remove the detent wheel and/or the ball bearing, place the selector drum into a vice fitted with soft grips, and remove the bolt from the center of the detent wheel. Withdraw the detent wheel and ball bearing from the selector drum. Discard the bolt.

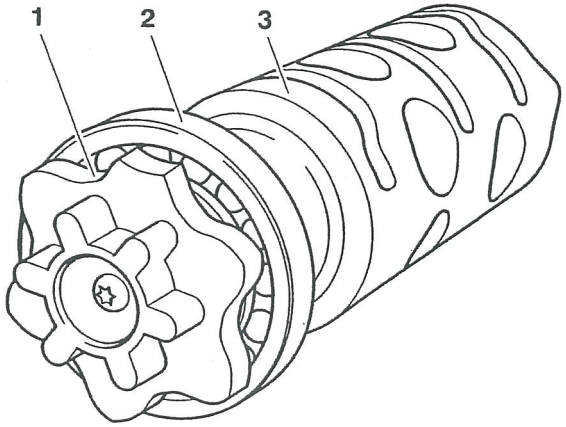

06.08-1

1. Detent wheel
2. Ball bearing
3. Selector drum

Inspection

1. Examine all components for damage and/or wear, paying particular attention to the selector forks and selector drum. Replace any parts that are damaged and/or worn.

Gear selector fork thickness

Standard	**5.90 – 6.00 mm**
Service limit	**5.80 mm**

Gear selector groove width

Standard	**6.00 – 6.15 mm**
Service limit	**6.25 mm**

Selector fork to groove clearance

Standard	**0.25 mm**

2. Examine the gear change shaft seal for damage and/or wear. Replace the seal if damaged and/or worn.

Installation

NOTE:

- **The detent wheel is keyed to the selector drum**

1. If removed, fit the ball bearing and detent wheel to the selector drum.
2. Fit a new bolt and tighten to **12 Nm.**
3. Using clean engine oil, lubricate the bearing.
4. Locate the selector drum assembly to the crankcase.

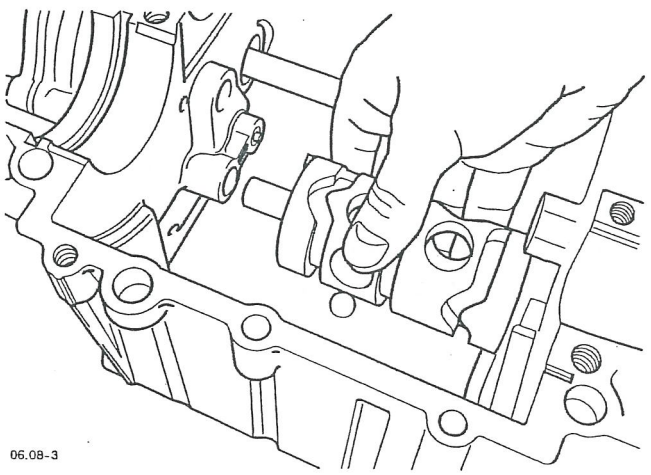

06.08-3

Locating the selector drum

5. Fit new bolts and washers securing the bearing and selector drum in the crankcase. Tighten the bolts to **12 Nm.**

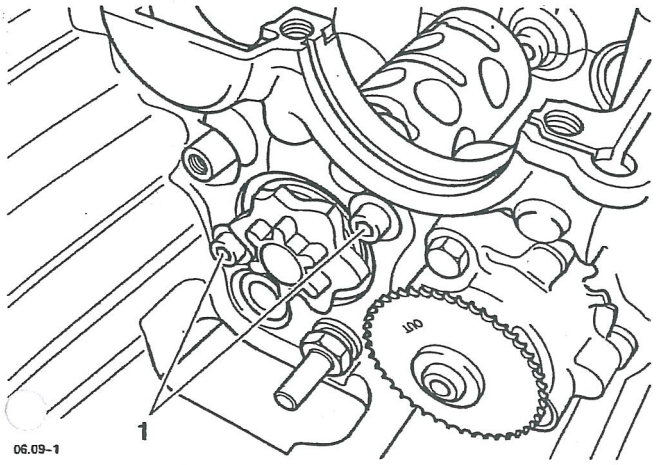

1. Bolts

NOTE:

- **The detent arm is held in position under spring pressure.**

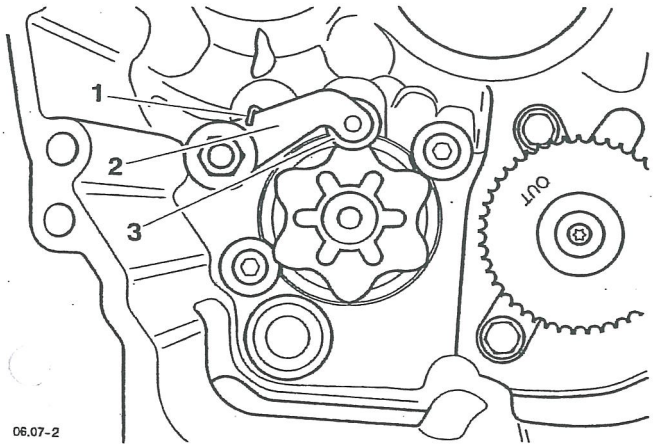

1. Spring
2. Detent arm
3. Detent wheel

6. Assemble the detent arm as noted on removal and place up to the crankcase.

7. Hold the detent arm assembly in position and fit a new capscrew. Start the thread and push the detent arm, using finger pressure, to locate on the detent wheel. Ensure the detent arm remains in the collar and correctly locates on the detent wheel. Tighten the capscrew to **12 Nm.**

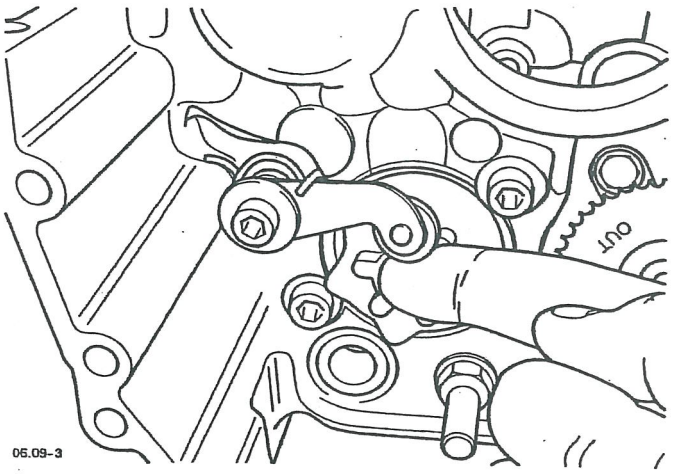

Locating the detent arm

8. Rotate the selector drum and ensure a smooth movement. Rectify as necessary.

9. Using clean engine oil, lubricate the lip of the seal on the gear change shaft.

10. Lubricate, with a 50/50 solution of engine oil and molybdenum disulphide grease, both sides of the fingers of the selector mechanism on the selector shaft.

CAUTION: Take care to avoid damaging the lip of the seal when inserting the gear change shaft into the crankcase. A damaged seal will lead to oil loss and could result in engine damage.

11. Insert the gear change shaft into the crankcase. Gently push the gear change lever end of the shaft through the seal located, at the gear change lever end, in the crankcase.

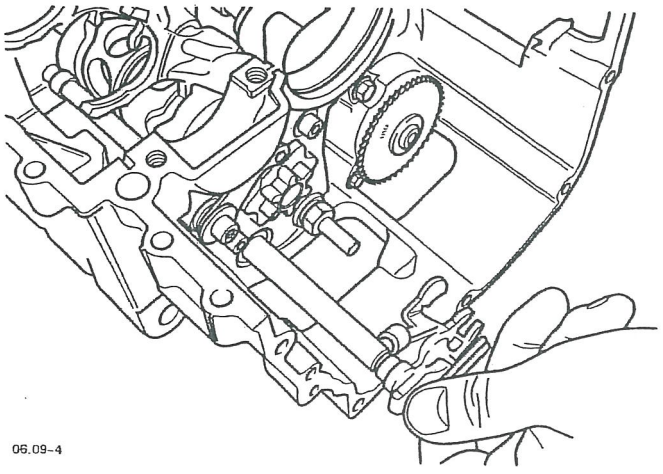

Inserting the gear change shaft

12. Ensure that the gear change shaft locates in the detent wheel and that the spring fits over the bolt abutment.

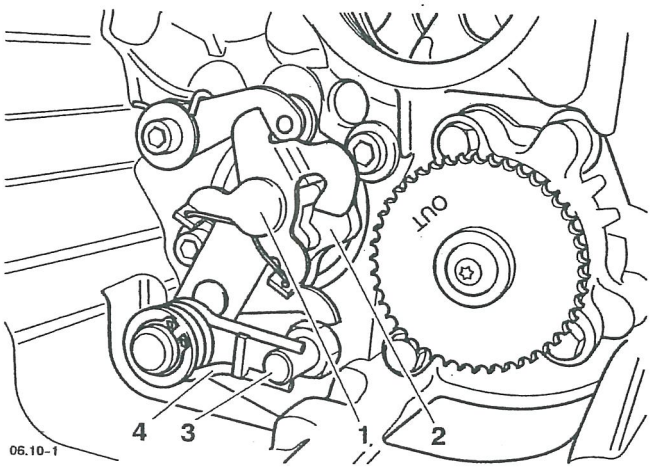

1. Gear change shaft
2. Detent wheel
3. Abutment bolt
4. Spring

13. Fit the large washer and circlip to the gear pedal end of the gear lever shaft.

14. If previously removed, fit the gear pedal to the shaft in the same orientation as noted prior to removal. Tighten the fixing to **9 Nm.**

15. Position the selector drum in the neutral position.

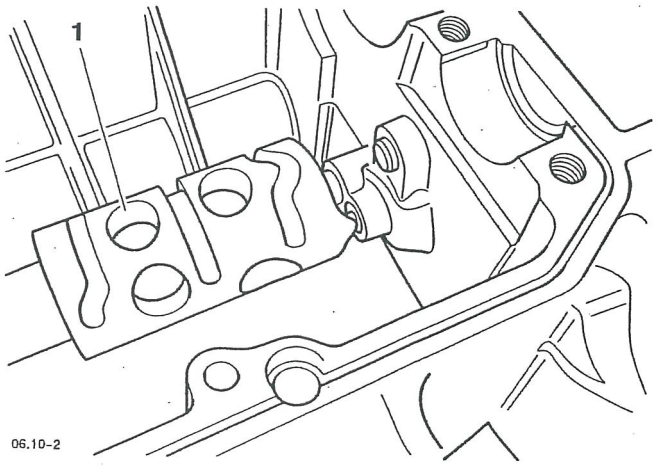

1. Neutral position

16. Check that the detent arm locates in the raised profile in the detent wheel (neutral position).

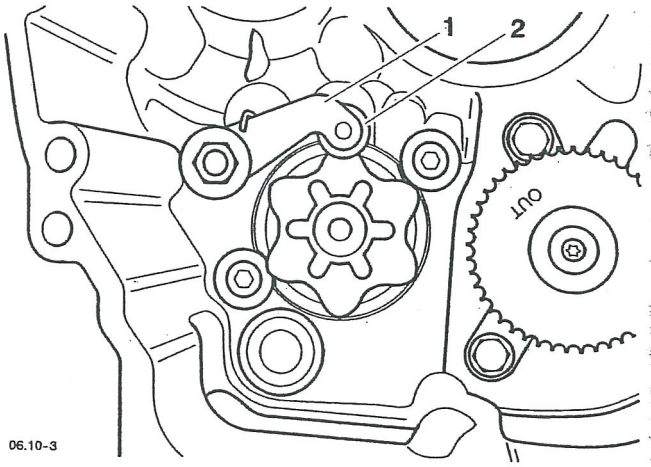

1. Detent arm
2. Raised profile

CAUTION: The selector forks can be fitted incorrectly. Ensure the position and orientation of the selector forks are the same as noted during removal. Incorrect fitting of the selector forks will cause gearbox damage when changing gear.

NOTE:

- **The center selector fork locates as shown below:**

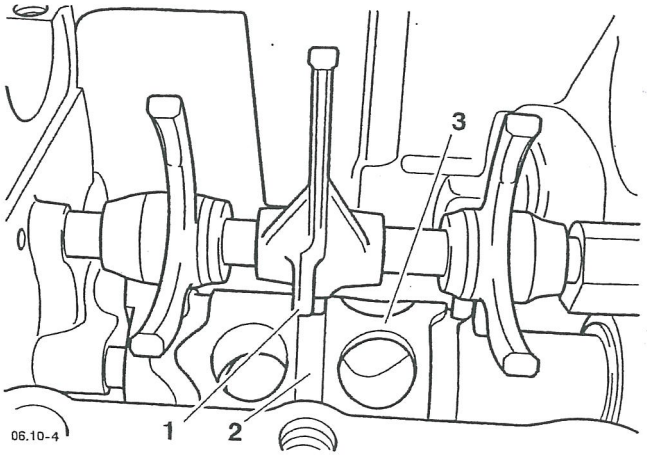

1. Selector stop
2. Selector drum guide
3. Selector drum

17. Push the selector shaft into the crankcase from the keeper plate end. As the shaft is inserted locate the selector forks as noted during removal.

18. Fit the 'U' shaped keeper plate.

19. Fit a new capscrew, and tighten to **12 Nm.**

20. Fit the input and output shafts as described elsewhere in this section.

INPUT AND OUTPUT SHAFTS ASSEMBLIES

Removal

The input and output shaft assemblies can be lifted out of the upper crankcase after the crankcase halves have been separated. For details of crankcase separation, refer to the crankcase section.

Installation

1. Place the output shaft in position in the crankcase.
2. Ensure the retaining ring on the roller bearing locates in the groove provided in the crankcase.

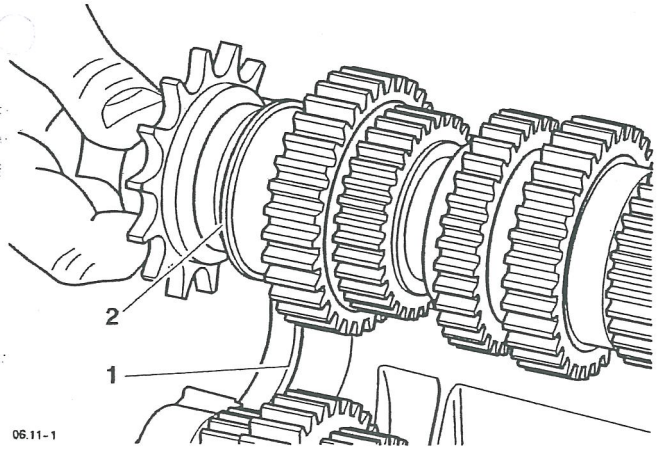

1. Groove in crankcase
2. Retaining ring

3. Ensure the roll pin in the roller bearing outer race locates in the recess provided in the crankcase.

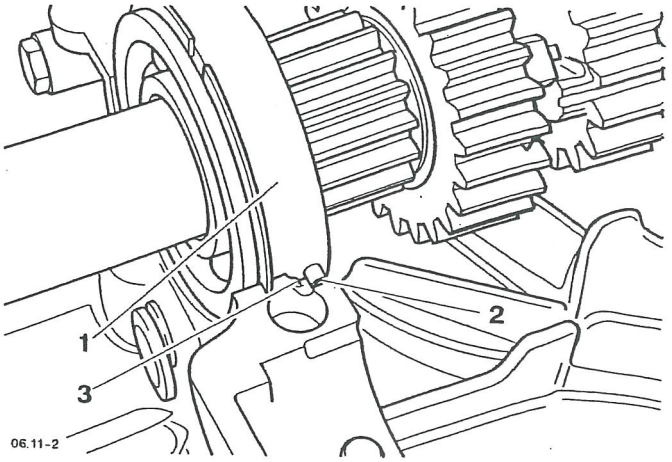

1. Roller bearing
2. Roll pin
3. Recess in crankcase

4. Ensure the dowel in the needle roller bearing locates in the recess provided in the crankcase.

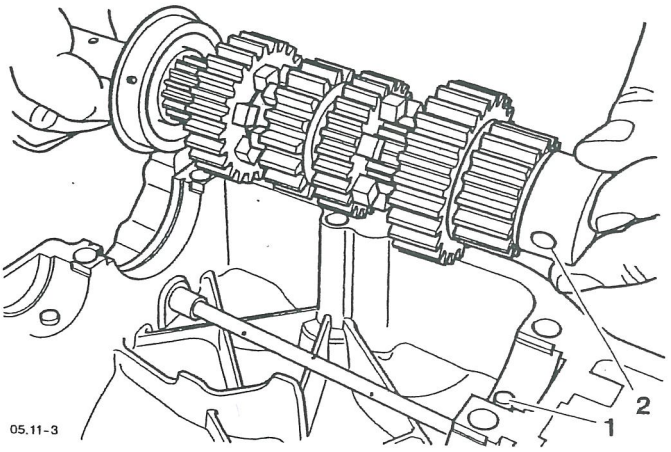

1. Dowel in crankcase
2. Recess in needle roller bearing

5. Ensure the output shaft seal aligns with its recess in the crankcase.
6. Place the output shaft to its position in the crankcase.
7. Repeat steps 1 to 6 (excluding 5) for the input shaft and ensure that both sets of gear mesh correctly.

INPUT SHAFT

Disassembly

Remove the clutch assembly from the input shaft (if not already removed). Working from the opposite end to where the clutch assembly is fitted, dismantle the input shaft as follows:

1. Remove the needle roller bearing (13).
2. Remove the thrust washer (12).
3. Remove second gear (11).
4. Remove the circlip (9) and thrust washer (10).
5. Remove sixth gear (7), complete with the splined bush (8), which runs inside the gear.
6. Remove the thrust washer (6) and then the circlip (5).
7. Slide off the combined third and fourth gear (4).
8. Remove the circlip (3) and then the thrust washer (2).
9. Remove fifth gear (1).

WARNING: When using a press, always wear overalls, eye face and hand protection. Objects such as bearings frequently break-up under load and the debris caused during break-up may cause damage and injury to unprotected parts of the body.

Never wear loose clothing, which could become trapped in the press and cause crushing injury to the hand, arms or other parts of the anatomy.

10. Place the input shaft (14) in a press with the clutch end of the shaft facing the press ram and the input shaft ball bearing (15) supported on press bars.
11. Protect the shaft thread with a thread protector or similar.
12. Press the shaft through the bearing.

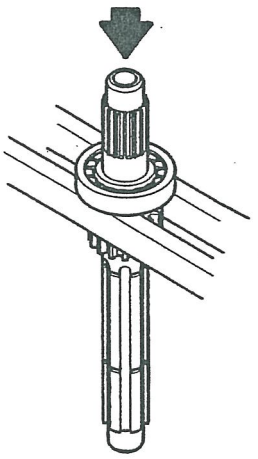

06.12-1

1. Pressing Off The Input Shaft Bearing

Inspection

1. Examine all gears, bearings and sleeves for damage, chipped teeth and wear beyond the service limits. Replace all suspect components and always use new circlips to assemble the shaft.

Assembly

NOTE:

- **Lubricate each gear and bush with clean engine oil during assembly.**

WARNING: When using a press, always wear overalls, eye face and hand protection. Objects such as bearings frequently break-up under load and the debris caused during break-up may cause damage and injury to unprotected parts of the body.

Never wear loose clothing, which could become trapped in the press and cause crushing injury to the hand, arms or other parts of the anatomy.

1. Place the input shaft bearing (15) on press bars, ensuring that the press bars support the inner race of the bearing and the circlip groove is facing downwards.

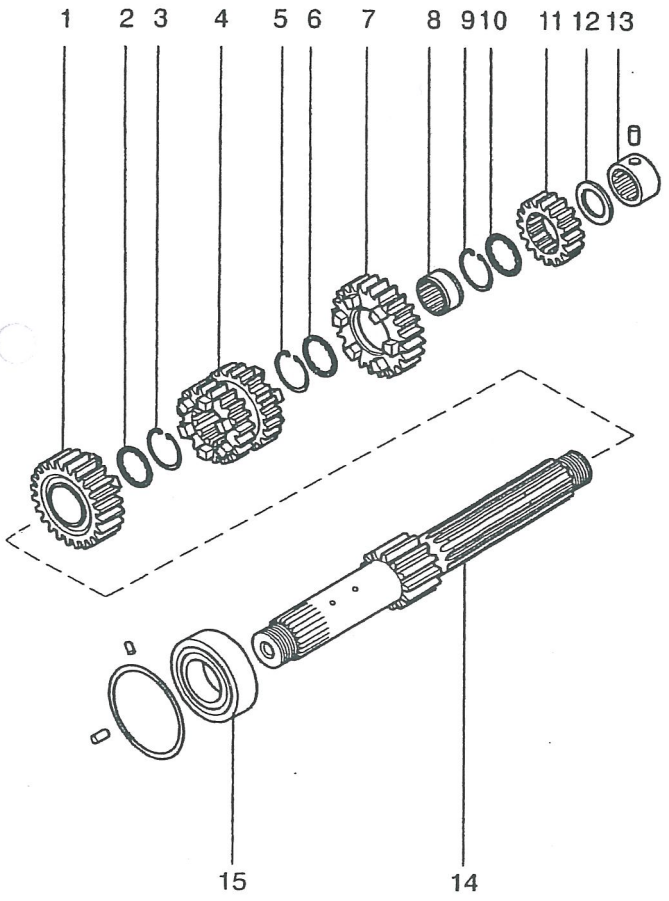

1. 5th gear
2. Thrust washer
3. Circlip
4. 3rd and 4th gear
5. Circlip
6. Thrust washer
7. 6th gear
8. Splined bush
9. Circlip
10. Thrust washer
11. 2nd gear
12. Needle roller bearing thrust washer
13. Needle roller bearing
14. Input shaft
15. Ball bearing

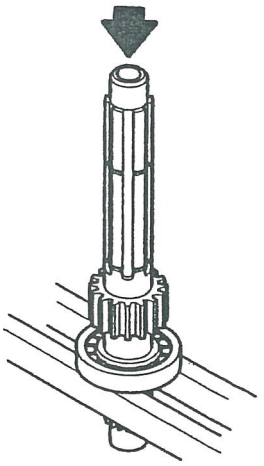

06.13-2

Pressing on the bearing

2. Position the input shaft (14) to the bearing with the clutch end pointing downwards through the bearing.
3. Press the shaft through the bearing until the bearing comes into contact with the fixed gear on the shaft.
4. Fit fifth gear (1), with the dog teeth pointing away from the input shaft ball bearing.
5. Fit a thrust washer (2) and then a new circlip (3), ensuring that the clip is correctly located in the circlip groove.
6. Fit the combined third/fourth gear (4), with the smaller gear facing toward fifth gear. Ensure that the double oil hole in the shaft aligns with the oil hole in the gear.

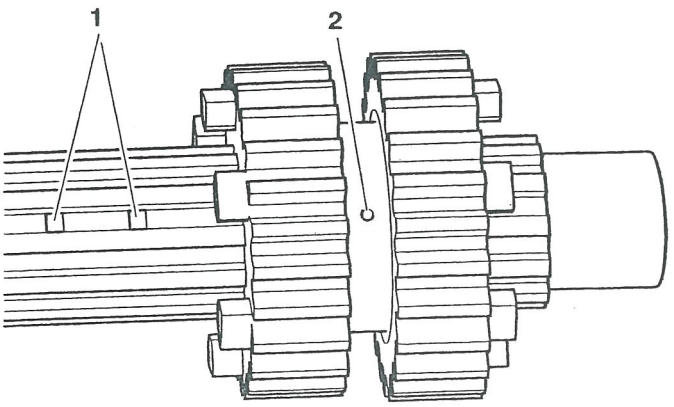

06.13-3

1. Double oil hole in input shaft
2. Oil hole in third/fourth gear

7. Fit a new circlip (5), ensuring that the clip is correctly located in the circlip groove, and then fit a thrust washer (6).

8. Fit the splined bush (8) for 6th gear (7), ensuring that the oil hole in the shaft aligns with one of the two oil holes in the splined bush.

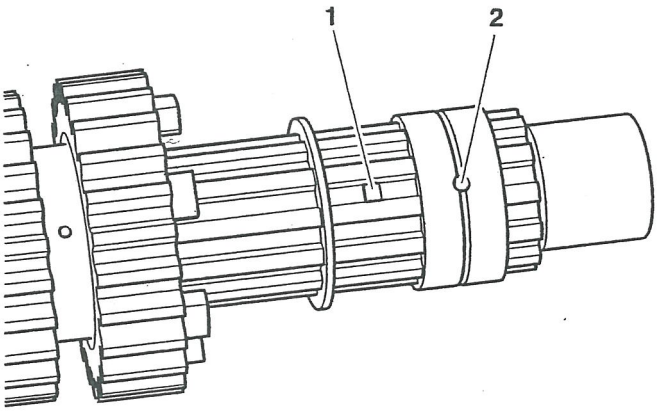

06.14-1

1. Oil hole - shaft
2. Oil hole - bush

9. Fit sixth gear (7), with the dog teeth facing third/fourth gear.
10. Fit a thrust washer (10) and a new circlip (9), ensuring that the clip is correctly located in the circlip groove.
11. Fit second gear (11).
12. Fit the needle roller bearing thrust washer (12).
13. Fit the needle roller bearing (13).
14. Fit the input shaft to the crankcase as described elsewhere in this section.

OUTPUT SHAFT

Disassembly

Working from the opposite end to the drive sprocket dismantle the output shaft as follows:

1. Remove the needle roller bearing (23) and thrust washer (22).
2. Remove first gear (21), noting its orientation.
3. Remove fifth gear (20).
4. Remove the circlip (19) and thrust washer (18).
5. Remove third and fourth gear (17 and 16), together with the splined bush (15).
6. Remove the circlip (13) and thrust washer (14).
7. Remove sixth gear (12).
8. Remove the circlip (11) and thrust washer (10).
9. Remove second gear (9), noting its orientation.
10. Position the output shaft (1) in a vice with soft jaws fitted. Tighten the vice to prevent the shaft from turning.
11. Release the lock tab (7) from the output sprocket nut (8).
12. Release and remove the sprocket nut, lock tab and sprocket (6).
13. Remove the oil seal (4), spacer (5) and retaining ring (3).

WARNING: When using a press, always wear overalls, eye face and hand protection. Objects such as bearings frequently break-up under load and the debris caused during break-up may cause damage and injury to unprotected parts of the body.

Never wear loose clothing, which could become trapped in the press and cause crushing injury to the hand, arms or other parts of the anatomy.

NOTE:

- **The output shaft incorporates a shoulder, which prevents using the inner race to remove the ball bearing on the press.**

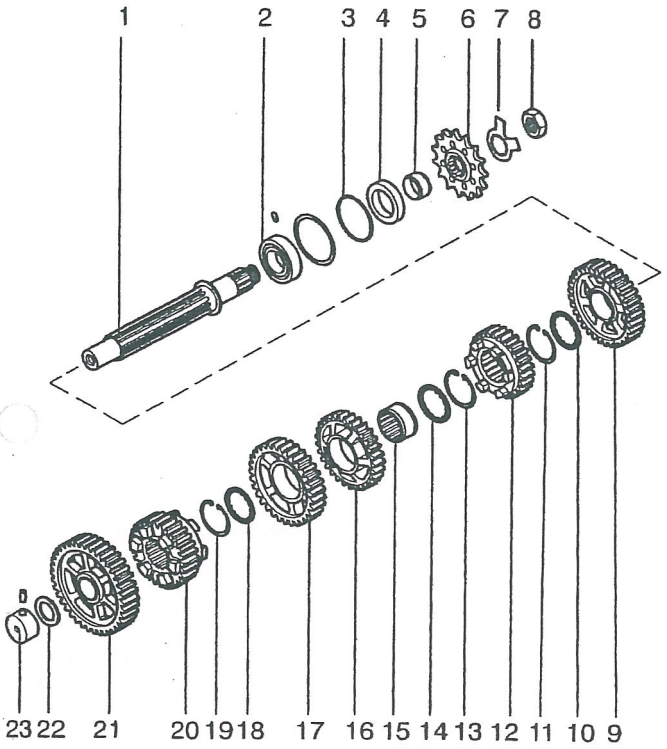

1. Output shaft
2. Ball bearing
3. Retaining ring
4. Oil seal
   Spacer
6. Output Sprocket
7. Tab washer
8. Sprocket nut
9. 2nd gear
10. Thrust washer
11. Circlip
12. 6th gear
13. Circlip
14. Thrust washer
15. Splined bush
16. 4th gear
17. 3rd gear
18. Thrust washer
19. Circlip
20. 5th gear
21. 1st gear
22. Thrust washer
23. Needle roller bearing

14. Place the output shaft in a press with the sprocket end of the shaft facing the press ram and the shaft ball bearing (2), supported on its outer race, on press bars.

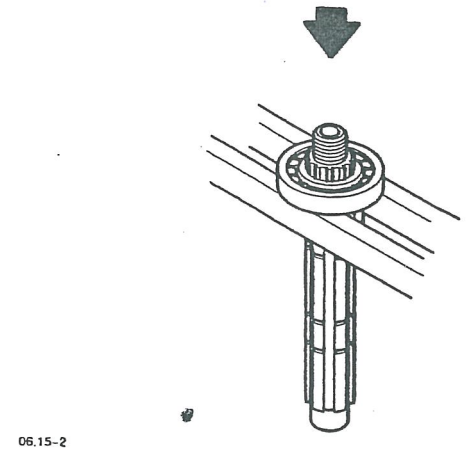

1. Pressing off the bearing

15. Protect the shaft thread with a thread protector or similar.

16. Press the shaft through the bearing.

Inspection

1. Examine all gears, bearings and sleeves for damage, chipped teeth and wear beyond the service limits. Replace all suspect components and always use new circlips to assemble the shaft.

2. Examine the oil seal for damage and/or wear. Replace if damaged and/or worn.

Assembly

NOTE:

- **Lubricate the oil seal lip and each gear and bush with clean engine oil during assembly.**

WARNING: When using a press, always wear overalls, eye face and hand protection. Objects such as bearings frequently break-up under load and the debris caused during break-up may cause damage and injury to unprotected parts of the body.

Never wear loose clothing, which could become trapped in the press and cause crushing injury to the hand, arms or other parts of the anatomy.

1. Place the output shaft ball bearing (2) on press bars, ensuring that the press bars support the inner race of the bearing and the circlip groove is facing downwards.

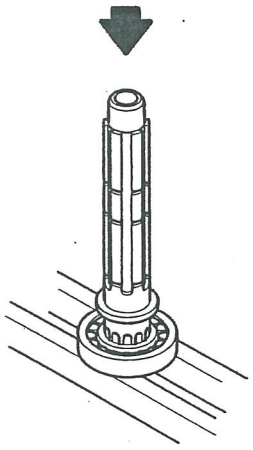

06.16-1

Pressing on the bearing

2. Position the output shaft (1) to the bearing with the sprocket end pointing downwards through the bearing.

3. Press the shaft through the bearing until the bearing comes into contact with the shoulder on the output shaft.

NOTE:

- **Lubricate the lip of the oil seal with clean engine oil prior to replacement.**

4. Fit the retaining ring (3), spacer (5) and oil seal (4) to the sprocket end of the shaft.

5. Position the output shaft in a vice, with soft jaws fitted, and tighten the vice to prevent the shaft from turning.

6. Apply Threebond 1374 to the output sprocket nut. Fit the output sprocket (6), a new lock tab (7) and sprocket nut (8). Tighten the sprocket nut to **132 Nm** and close the lock tab.

7. Withdraw the shaft from the vice and continue to assemble the shaft from the opposite end to the output sprocket.

8. Fit second gear (9), in the same orientation as from removal.

9. Fit a thrust washer (10) and then a new circlip (11), ensuring that the clip is correctly located in the circlip groove.

CAUTION: Incorrect alignment of the oil holes will result in severe damage to the gears and selectors.

10. Fit sixth gear (12), with the selector fork groove facing away from the output sprocket end. Ensure that an oil hole in the gear aligns with an oil hole in the output shaft.

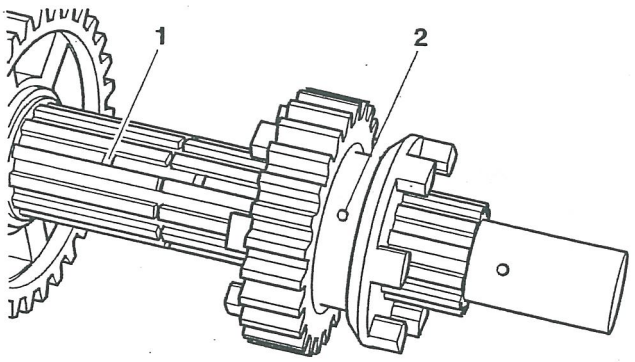

06.16-2

1. Oil hole in the output shaft
2. Oil hole in sixth gear

11. Fit thrust washer (14) and a new circlip (13), ensuring that the clip is correctly located in the circlip groove.

12. Fit the splined bush (15) for fourth and third gear. Ensure correct alignment of the oil holes in the shaft with the oil holes in the splined bush.

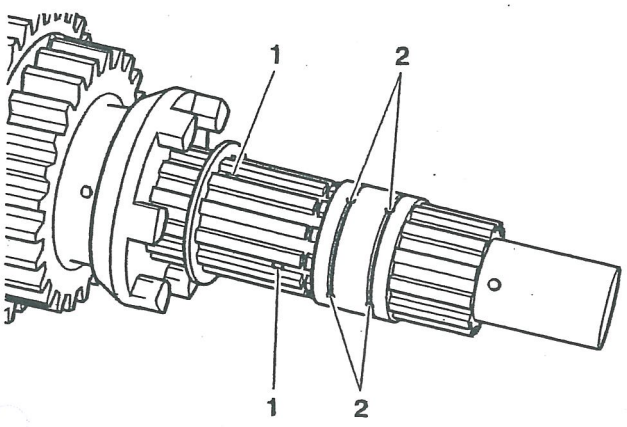

06.17-1

1. Oil holes in the output shaft
2. Oil holes in the splined bush

13. Fit fourth gear (16), with the raised center facing away from the output sprocket.

14. Fit third gear (17), with the raised center facing towards the output sprocket.

15. Fit thrust washer (18) and then a new circlip (19), ensuring that the clip is correctly located in the circlip groove.

16. Fit fifth gear (20), with the selector fork groove facing the output sprocket. Ensure correct alignment of the oil holes in the shaft with the oil holes in the gear.

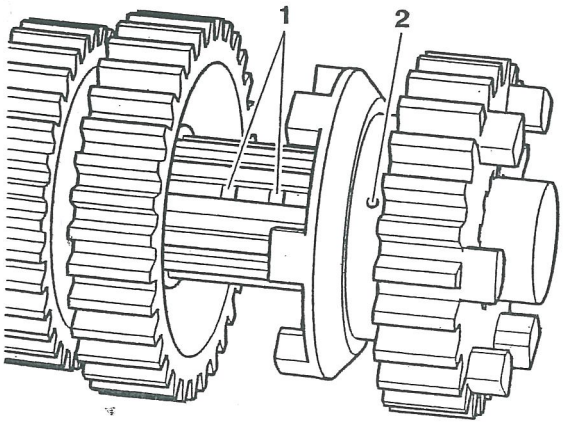

06.17-2

1. Oil holes in the output shaft.
2. Oil holes in fifth gear

17. Fit first gear (21), in the same orientation as from removal (raised center facing away from the sprocket end).

18. Fit the needle roller bearing thrust washer 22).

19. Fit the needle roller bearing (23).

20. Fit the output shaft to the crankcase as described elsewhere in this section.

SPRAG CLUTCH

NOTE:

- **The sprag clutch may be detached after first removing the seat and the battery (disconnect the leads negative (black) lead first). The left hand lower fairing and the alternator must also be removed. Refer to the relevant sections for removal procedures.**

Removal

1. Remove the left hand lower fairing as described in the body section.
2. Remove the alternator cover and alternator as described in the electrical section.

NOTE:

- **The sprag clutch is located on the rear of the alternator rotor.**

3. Withdraw the starter drive gear from the sprag clutch housing.

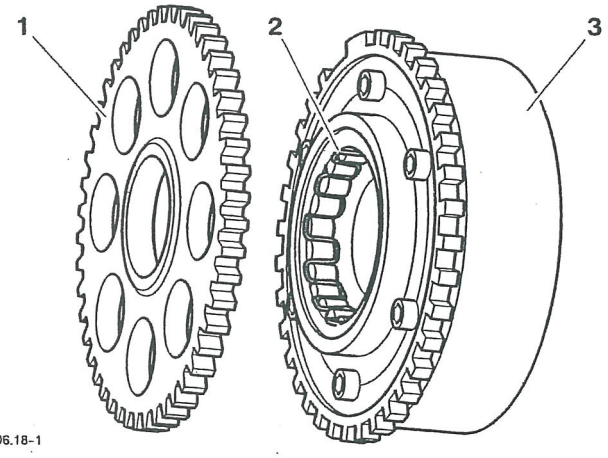

06.18-1

1. **Starter drive gear**
2. **Sprag clutch housing**
3. **Alternator rotor**

4. Release the bolts securing the sprag clutch housing to the alternator rotor. Withdraw the sprag clutch housing.

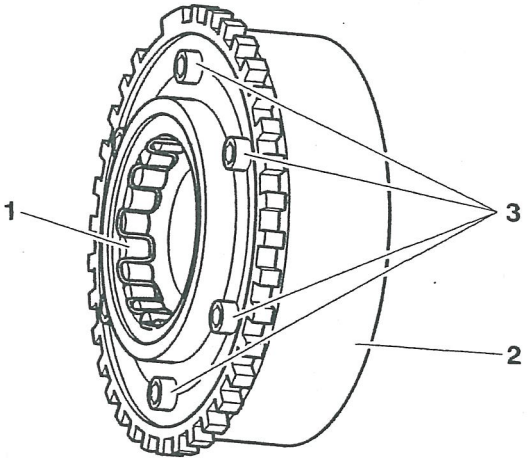

06.18-2

1. **Sprag clutch assembly**
2. **Alternator rotor**
3. **Bolts**

5. Detach the sprag clutch through the housing.

Inspection

1. Check the sprag clutch bearings for overheating, wear and/or non-smooth operation. Replace the sprag clutch if overheating, wear and/or non-smooth operation is found.
2. With the sprag clutch mounted in the housing, check the sprag clutch for smooth, free movement in **one** direction only (as indicated by the arrow marked on the sprag clutch body).

Installation

1. Locate the sprag clutch to the housing as shown below. Push firmly until the lip seats in the recess provided in the housing.

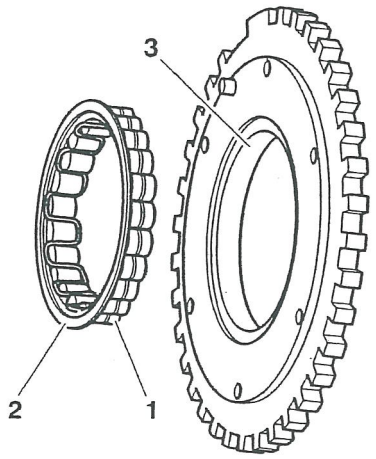

06.19-1

1. **Sprag clutch**
2. **Lip**
3. **Recess**

2. Fit the housing to the alternator rotor, ensuring the dowel mounted in the housing locates correctly in the rotor.

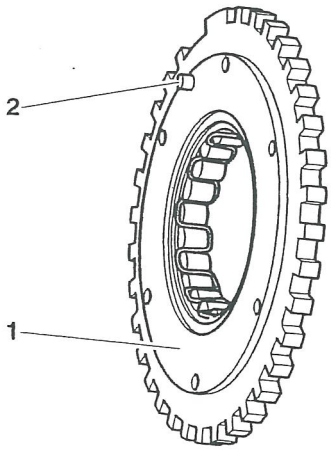

06.19-2

1. **Housing**
2. **Dowel**

3. Ensure that the housing is squarely seated and is not jammed on the rotor (if assembled correctly, there should be a small amount of rotational movement detectable between the housing and rotor) then install new bolts.

4. Working in the sequence shown, tighten the bolts to **16 Nm.** Once all six bolts have been tightened, go around again in sequence and recheck each bolt is correctly torqued, if any bolt moves, go around again. Repeatedly check the bolts in sequence until all are correctly torqued and do not move when checked, this will ensure the sprag clutch housing is correctly seated on the rotor.

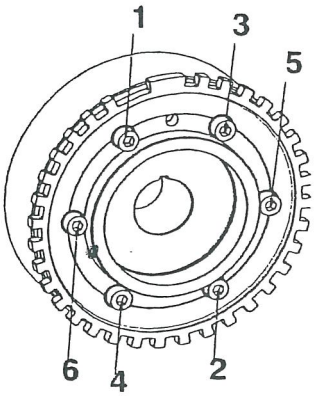

Bolt tightening sequence

5. Fit the starter drive gear to the sprag clutch housing.

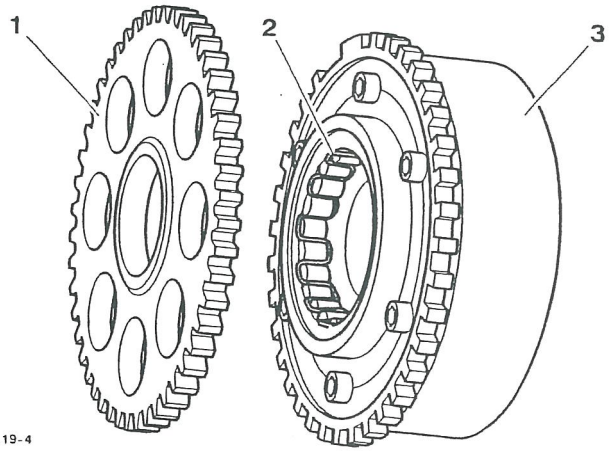

06.19-4

1. **Starter drive gear**
2. **Sprag clutch housing**
3. **Alternator rotor**

6. Fit the alternator and alternator cover as described in the electrical section.

7. Fit the battery and connect the leads, positive (red) lead first.

8. Fit the left hand lower fairing, as described in the body section.

9. Fit the seat.

LUBRICATION SYSTEM

CONTENTS

	Page
Exploded View - Sump	7.2
Exploded View - Oil Pump & Gears	7.3
Oil Circuit	7.4
Oil Circuit Description	7.5
Engine Oil	7.6
Specification	7.6
Triumph Engine Oil	7.6
Oil Level Inspection	7.7
Engine Oil and Filter Change	7.7
Low Oil Pressure Warning Light Switch	7.8
Removal	7.8
Installation	7.9
Heat Exchanger	7.10
Inspection	7.11
Installation	7.11
Sump	7.12
Removal	7.12
Inspection	7.13
Installation	7.13
Oil Pump	7.14
Removal	7.14
Inspection	7.15
Installation	7.16

Exploded View - Sump

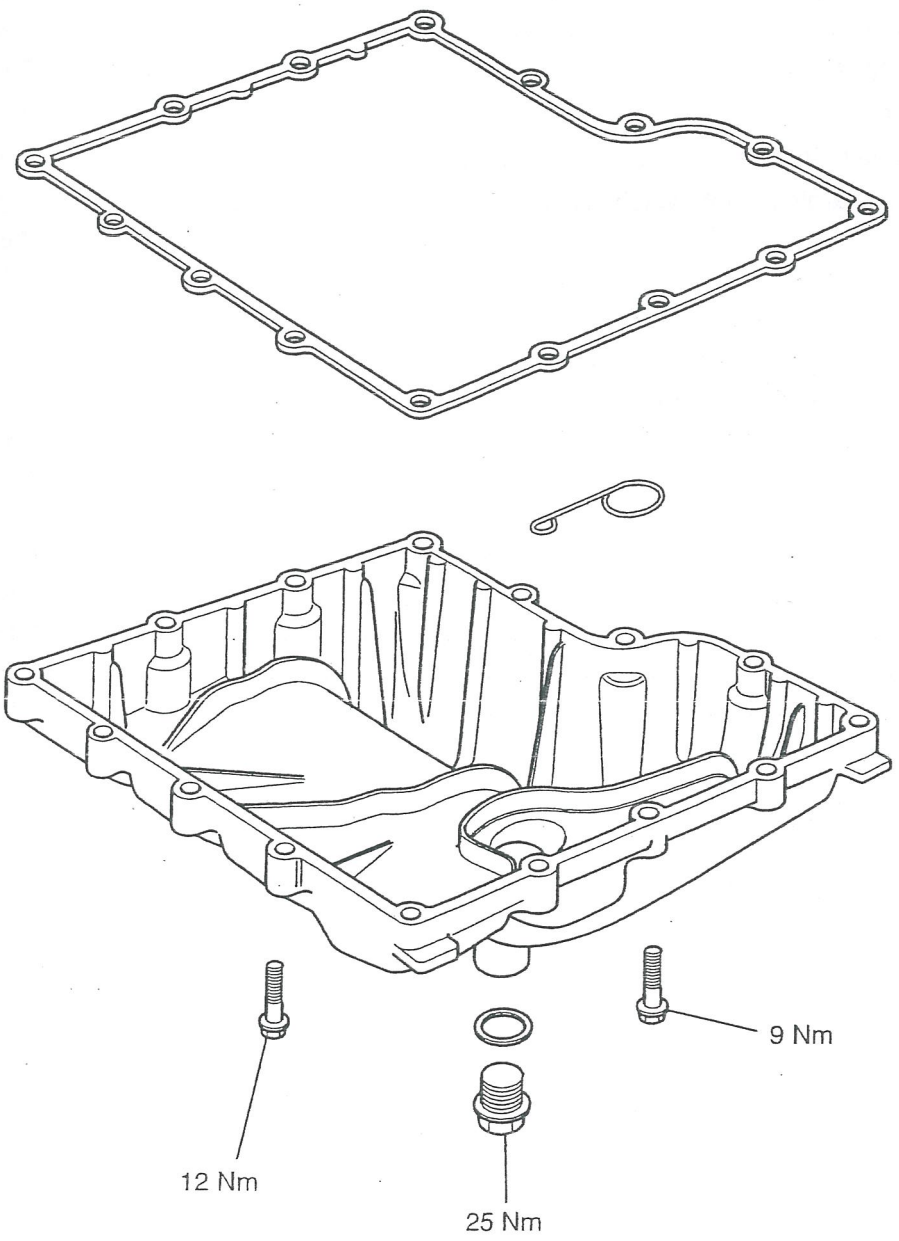

Exploded View - Oil Pump and Gears

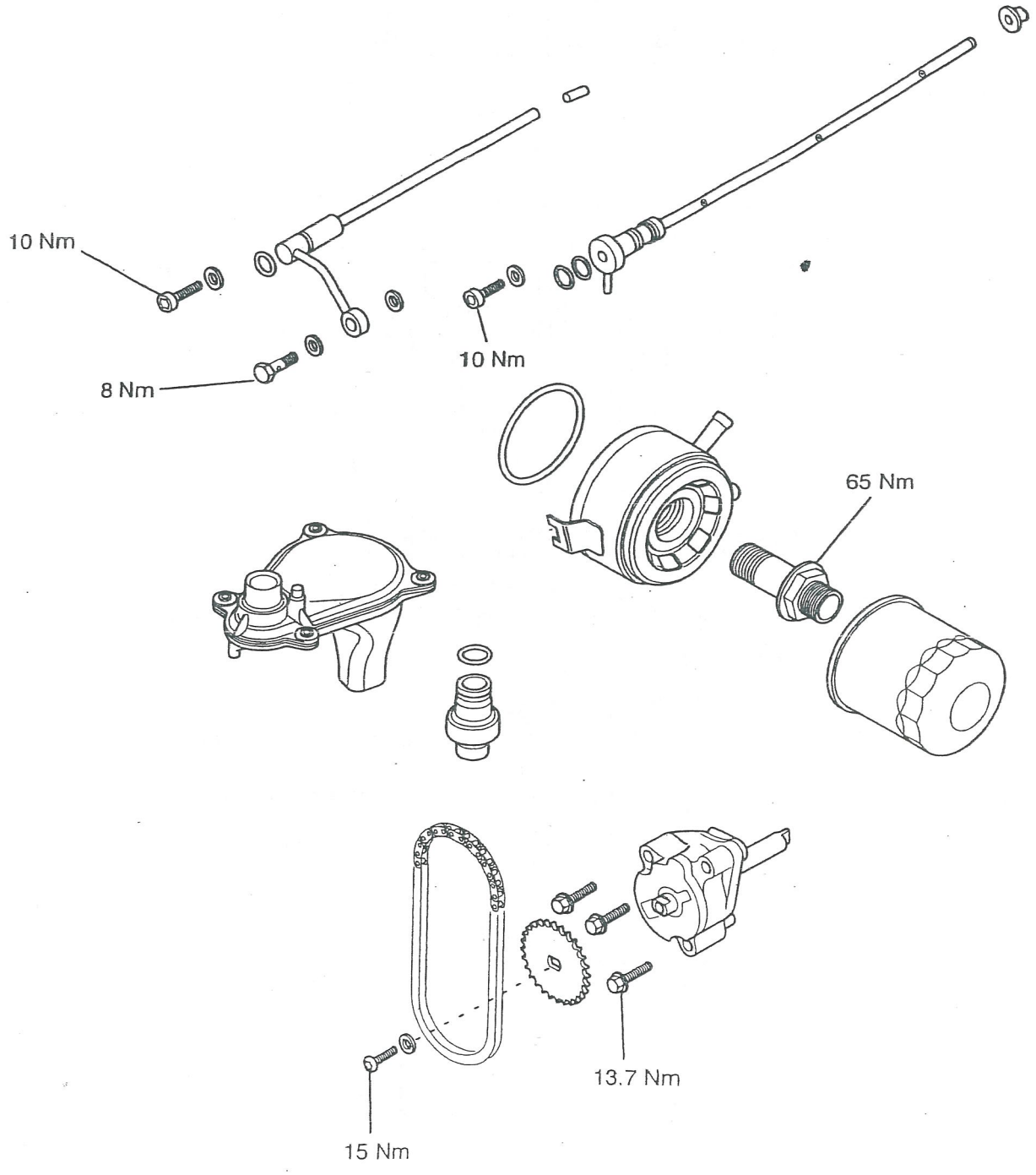

Oil Circuit

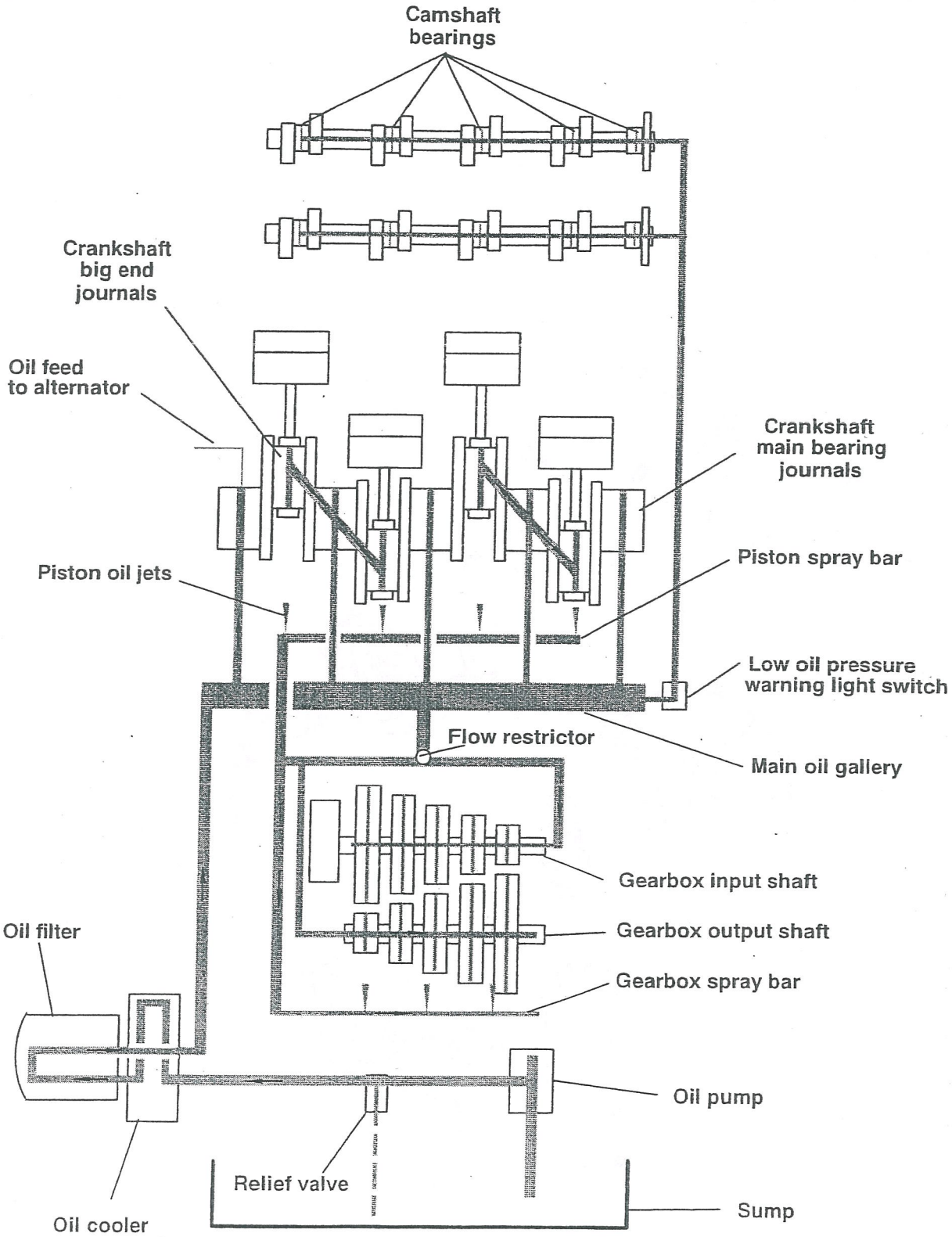
Camshaft bearings
Crankshaft big end journals
Oil feed to alternator
Crankshaft main bearing journals
Piston oil jets
Piston spray bar
Low oil pressure warning light switch
Flow restrictor
Main oil gallery
Gearbox input shaft
Gearbox output shaft
Gearbox spray bar
Oil filter
Oil pump
Relief valve
Sump
Oil cooler

OIL CIRCUIT DESCRIPTION

Oil is collected from the sump and is drawn through a mesh strainer into the single rotor oil pump which requires oil priming before fitment.

Pressurised oil is fed along an internal passage to an oil to water heat exchanger mounted on the front of the crankcase. This passage houses the pressure relief valve which is a push fit into the crankcase. The oil pressure relief valve is set to open at 5 bar (73.5 lb/in^2) and, when open, returns oil directly to the sump.

From the heat exchanger, the oil passes through the oil filter which is mounted on the heat exchanger.

After leaving the oil filter, the oil enters the main oil gallery in the crankcase. From here, oil is distributed to the cylinder head, transmission and crankshaft.

Vertical drillings from the main oil gallery feed oil to the five main bearings. The crankshaft is cross drilled to feed oil from the main bearings to the big end bearings.

From the right hand end of the main oil gallery, oil is fed via an external pipe to the cylinder head. The low oil pressure warning light switch is located at the lower end of this pipe.

Within the cylinder head, a passageway feeds oil to the camshafts which, via drillings, lubricates the camshafts, tappet buckets and valves. Spill oil returns via the cam chain area to the sump, lubricating the cam chain in the process.

A vertical passageway in the upper crankcase is fitted with a flow restrictor which allows the correct amount of oil to be fed to the piston spray bars and to the input and output shafts in the gearbox.

The piston spray bar is fitted with corresponding oil jets. These jets both cool the pistons and lubricate the little end of the connecting rod.

The transmission input shaft is both drilled through its entire length and cross-drilled. The cross drillings provide oil directly to the gears and bearings. Oil flowing through the centre of the shaft exits at the clutch end providing oil to the clutch assembly.

A similar passageway carries oil to the output shaft bearing and then on to the output shaft. The output shaft is also cross drilled to carry oil directly to the gears.

ENGINE OIL

Specification

Semi or fully synthetic 10W/40 or 15W/50 motorcycle engine oil which meets specification API SH (or higher) and JASO MA, such as Mobil 1 Racing 4T

CAUTION: Triumph high performance fuel injected engines are designed to use semi or fully synthetic motorcycle engine oil which meets specification API SH (or higher) AND JASO MA.

Do not add any chemical additives to the engine oil. The engine oil also lubricates the clutch and any additives could cause the clutch to slip.

Do not use mineral, vegetable, non-detergent oil, castor based oils or any oil not conforming to the required specification. The use of these oils may cause instant, severe engine damage.

Ensure no foreign matter enters the crankcase during an oil change or top-up.

Triumph Engine Oil



Your Triumph Motorcycle is a quality engineered product which has been carefully built and tested to exacting standards. Triumph Motorcycles are keen to ensure that you enjoy optimum performance from your machine and with this objective in mind have tested many of the engine lubricants currently available to the limits of their performance.

Mobil 1 Racing 4T consistently performed well during our tests and has become our primary recommendation for the lubrication of all current Triumph motorcycle engines.

Mobil 1 Racing 4T, specially filled for Triumph, is available from your authorised Triumph dealer.

OIL LEVEL INSPECTION

1. If the engine has been running, allow it to stand for at least 10 minutes before checking the oil level.

NOTE:

- **Accurate determination of the true oil level is only possible when the motorcycle is level and upright, not when it is on the side stand. In addition, the oil filler cap/dipstick must be screwed fully home in order to obtain a correct reading.**

2. Remove the oil filler cap/dipstick from the crankcase and wipe the dipstick with a clean cloth.

3. Refit the oil filler cap/dipstick, screw it fully home and then remove it promptly in order to establish the oil level. The oil level is indicated by hash marks on the filler plug/dipstick. When full, the indicated oil level must level with the top of the hashed area.

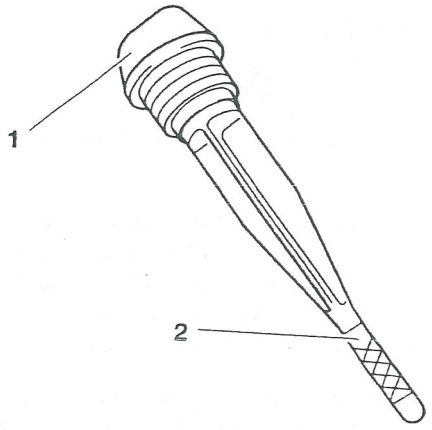

07.07-1

Filler plug/dipstick

2. Correct level

4. If the oil level requires adjustment, add oil, a little at a time, until the correct level is reached.

5. Refit the filler cap/dipstick.

ENGINE OIL AND FILTER CHANGE

WARNING: Prolonged or repeated contact with engine oil can lead to skin dryness, irritation and dermatitis. Furthermore, used engine oil contains potentially harmful contaminants which can cause cancer.

When handling used engine oil, always wear protective clothing and avoid any skin contact with the oil.

1. If the engine has been running, allow it to stand for at least 10 minutes to allow the oil and engine components to cool.

2. Position the motorcycle on level ground and on a paddock stand.

3. Place a suitable container beneath the sump plug to collect the displaced oil.

WARNING: The oil may be hot to the touch. Contact with hot engine oil may cause skin to be scalded or burnt.

4. Remove the sump drain plug and allow the oil to drain out completely.

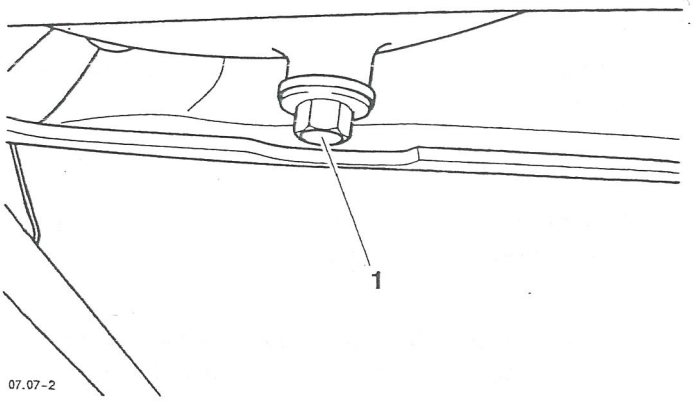

07.07-2

1. Sump drain plug

5. When the oil has completely drained out, fit a new sealing washer to the sump plug. Refit the plug tightening it to **25 Nm.**

CAUTION: Do not pour engine oil on the ground, down sewers or drains, or into water courses. To prevent pollution of water courses etc., dispose of used oil sensibly. If in doubt contact your local authority

6. Move the container to a point below the oil filter.

WARNING: If the engine has been running, the exhaust pipes may hot. Hot exhaust pipes can cause serious burns to the skin.

7. Using tool T3880311 to release the filter cartridge, unscrew and remove the oil filter from the front of the heat exchanger.

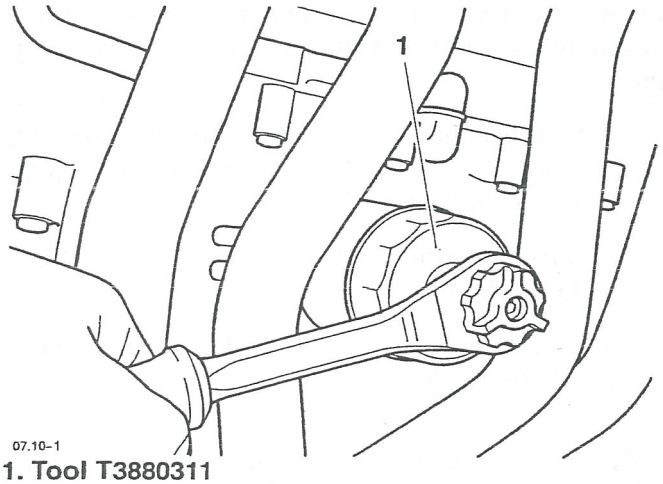

07.10-1

1. Tool T3880311

8. Apply a smear of clean engine oil to the seal of the new filter.

9. Fill the filter with new engine oil.

10. Fit the filter and tighten, using tool T3880311, to **10 Nm.**

11. Fill the engine with oil of the correct specification and viscosity.

NOTE:

- **Add oil slowly to avoid overfilling or spillage over the outside of the engine.**

CAUTION: Stop the engine if the low oil pressure warning light fails to extinguish.

Investigate and rectify the cause before restarting the engine. Running the engine with the low oil pressure warning light illuminated will cause engine damage.

12. Start the engine and allow it to run for a short time at idle. Check that the low oil pressure warning light extinguishes shortly after starting.

13. While the engine is running, check for oil leaks.

14. Stop the engine and adjust the oil level if necessary.

LOW OIL PRESSURE WARNING LIGHT SWITCH

NOTE:

- **The low pressure warning light may be removed after first removing the seat and disconnecting the battery leads, the negative (black) lead first.**

The low oil pressure warning light switch is located on the right hand side of the engine below the breather cover at the lower end of the oil feed pipe to the cylinder head.

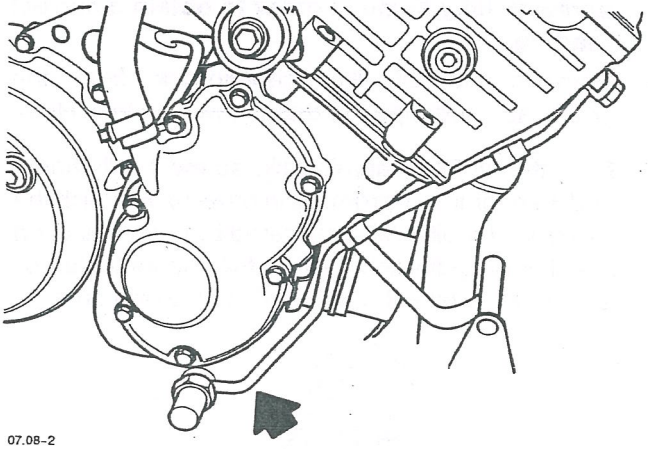

07.08-2

Arrowed: Crankcase to cylinder head feed pipe

WARNING: Prolonged or repeated contact with engine oil can lead to skin dryness, irritation and dermatitis. Furthermore, used engine oil contains potentially harmful contaminants which can cause cancer.

When handling used engine oil, always wear protective clothing and avoid any skin contact with the oil.

CAUTION: Do not pour engine oil on the ground, down sewers or drains, or into water courses. To prevent pollution of water courses etc., dispose of used oil sensibly. If in doubt contact your local authority

Removal

1. Remove the right hand lower fairing as described in the body section.

2. Withdraw the rubber boot from the low oil pressure light switch. Unscrew the electrical connection.

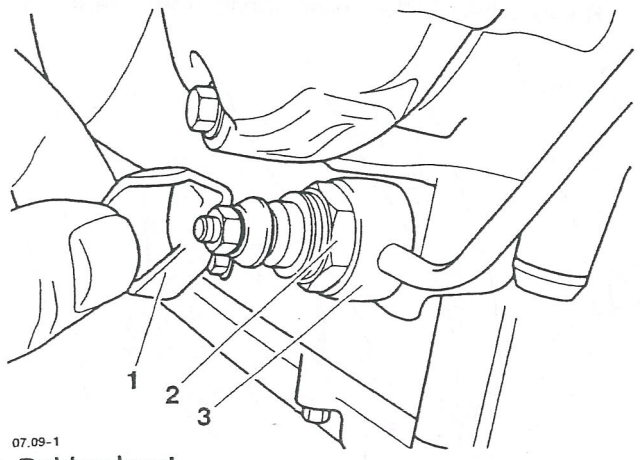

07.09-1

1. Rubber boot

2. Low oil pressure warning light switch

3. Oil pipe union

NOTE:

- **A small amount of oil will drain from the oil feed pipe when the banjo bolt is removed.**

3. Position a suitable clean receptacle to collect any displaced oil from the oil feed pipe.

4. Release the integral low oil pressure warning light switch/banjo bolt and remove from the oil feed pipe. Discard the two copper washers.

Installation

1. Fit the low oil pressure light switch/banjo bolt, incorporating new copper washers. Tighten the bolt to **28 Nm.**

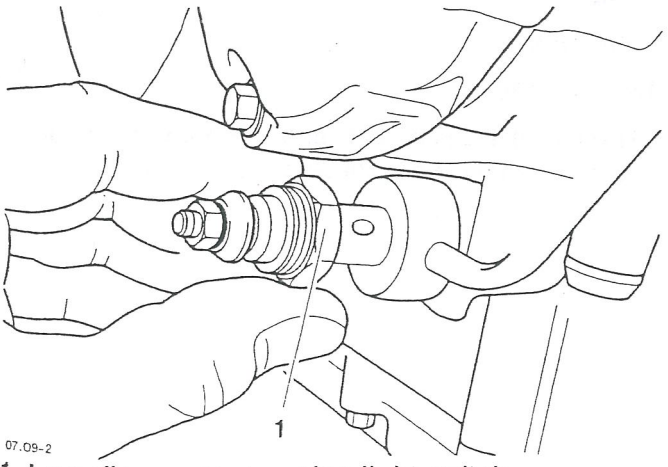

07.09-2

1. Low oil pressure warning light switch

2. Reconnect the wire to the switch.

3. Refit the rubber boot.

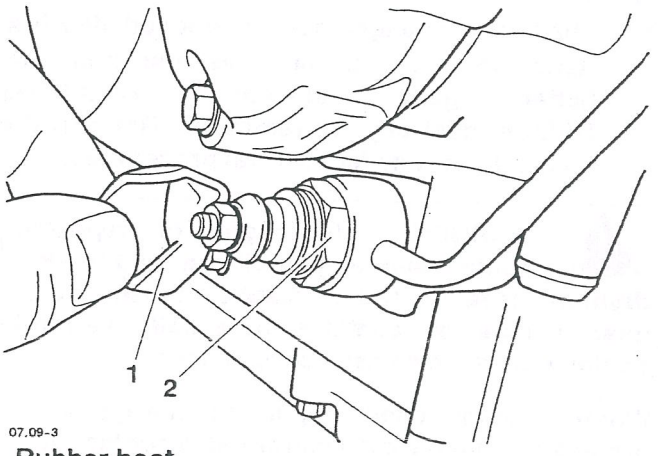

07.09-3

1. Rubber boot

2. Low oil pressure light switch

4. Fit the right hand lower fairing as described in the body section.

5. Reconnect the battery, positive (red) lead first.

6. Fit the seat.

HEAT EXCHANGER

NOTE:

- **The heat exchanger may be removed after first removing the seat and disconnecting the battery, negative (black) lead first. Both lower fairings must also be removed. Refer to the relevant sections for removal procedures.**

WARNING: Prolonged or repeated contact with engine oil can lead to skin dryness, irritation and dermatitis. Furthermore, used engine oil contains potentially harmful contaminants which can cause cancer.

When handling used engine oil, always wear protective clothing and avoid any skin contact with the oil.

CAUTION: Do not pour engine oil on the ground, down sewers or drains, or into water courses. To prevent pollution of water courses etc., dispose of used oil sensibly. If in doubt contact your local authority

1. Remove both lower fairings as described in the body section.

WARNING: Do not remove the coolant pressure cap when the engine is hot. When the engine is hot, the coolant inside the cooling system will be under pressure. Contact with the pressurised coolant will cause scalds and skin damage.

2. Drain the cooling system as described in the cooling section.

WARNING: The exhaust system will be hot if the engine has been recently running. Always allow sufficient time for the exhaust to cool before working on or near the exhaust system. Contact with a hot exhaust could result in burn injuries.

3. Position a suitable clean receptacle to collect any displaced oil from the oil filter and heat exchanger, when they are removed.

4. Remove the oil filter, using service tool T3880311.

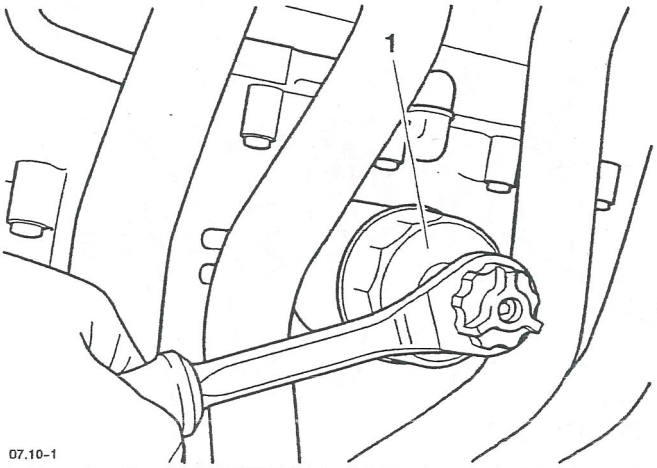

1. Service tool T3880311

5. Remove the coolant hoses from the heat exchanger.

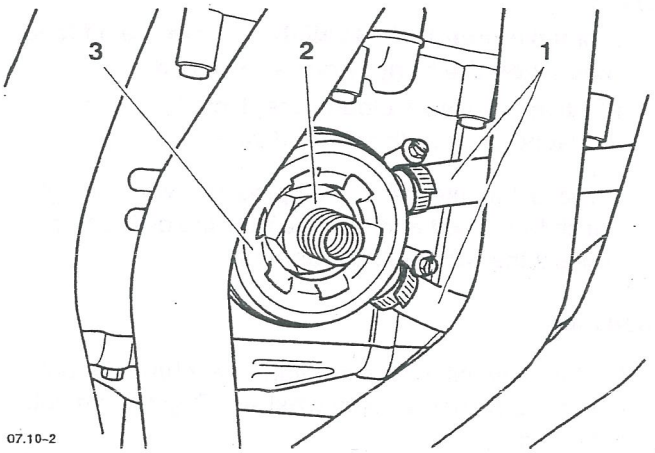

1. Hoses

2. Center bolt

3. Heat exchanger

6. Remove the center bolt and withdraw the heat exchanger from the crankcase.

Inspection

1. Check the heat exchanger 'O' ring for wear and/or damage. Replace the 'O' ring if it is found to be worn and/or damaged.

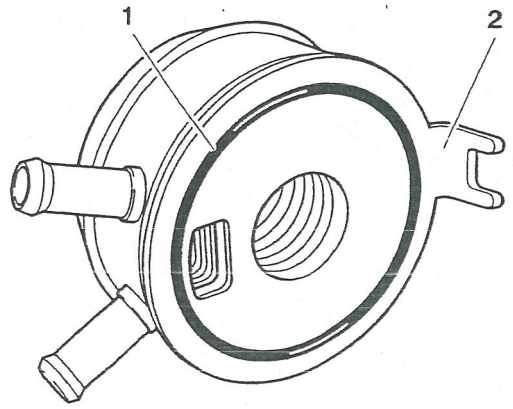

07.11-1

1. 'O' ring
2. Heat exchanger body

2. Check the heat exchanger body for corrosion and/or damage. Ensure the inlet and outlet ports on the heat exchanger are not blocked by any debris.

Installation

NOTE:

- **To ensure correct positioning, ensure that the tab on the heat exchanger locates in the recess provided in the crankcase.**

> ⚠ **CAUTION: Do not rely on the tab to hold the heat exchanger in position while tightening the center bolt. The tab will bend and will not prevent the heat exchanger from turning.**
>
> **Instead, firmly hold the heat exchanger in position by hand.**

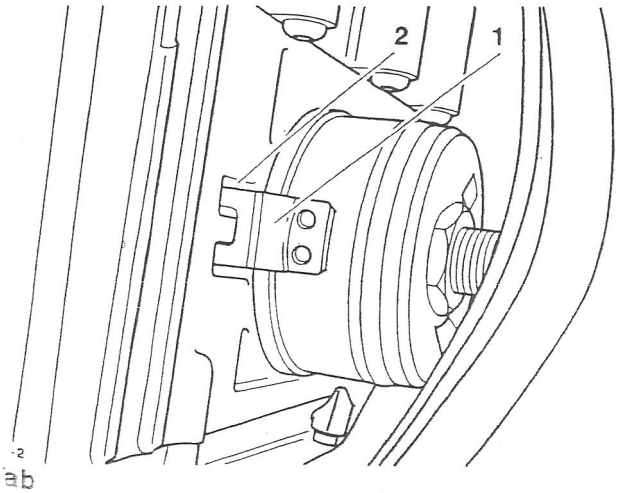

07.11-2

1. Tab
2. Crankcase location

1. Fit the heat exchanger to the crankcase and tighten the bolt to **65 Nm**.

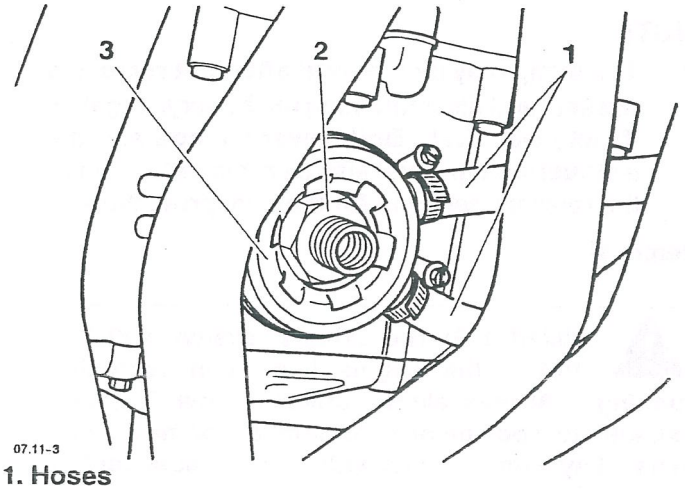

07.11-3

1. Hoses
2. Center bolt
3. Heat exchanger

2. Fit the coolant hoses to the heat exchanger and tighten the hose clips.
3. Take a new oil filter and fill with new engine oil.
4. Apply a smear of clean engine oil to the seal and fit the oil filter to the crankcase. Tighten, using service tool T3880311, to **10 Nm**.

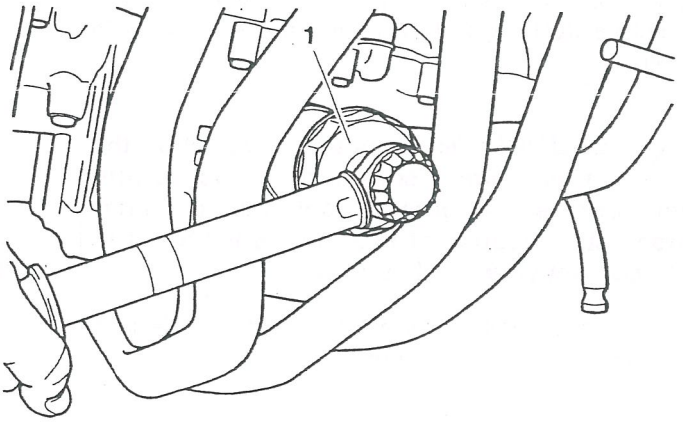

07.11-4

1. Service tool T3880311

5. Fill the cooling system as described in the cooling section.
6. Check the engine oil level, top up if necessary.
7. Fit both lower fairings as described in the body section.
8. Reconnect the battery, positive (red) lead first.

SUMP

NOTE:

- **The sump may be removed after first removing the seat and disconnecting the battery, negative (black) lead first. Both lower fairings and the exhaust system must also be removed. Refer to the relevant sections for removal procedures.**

Removal

WARNING: The exhaust system will be hot if the engine has been recently running. Always allow sufficient time for the exhaust to cool before working on or near the exhaust system. Contact with a hot exhaust could result in burn injuries.

1. Remove the exhaust system, as described in the fuel system section.

WARNING: Prolonged or repeated contact with engine oil can lead to skin dryness, irritation and dermatitis. Furthermore, used engine oil contains potentially harmful contaminants which can cause cancer.

When handling used engine oil, always wear protective clothing and avoid any skin contact with the oil.

CAUTION: Do not pour engine oil on the ground, down sewers or drains, or into water courses. To prevent pollution of water courses etc., dispose of used oil sensibly. If in doubt contact your local authority

2. Position a suitable clean receptacle to collect the displaced oil from the sump.
3. Remove the sump plug and allow the engine oil to drain.

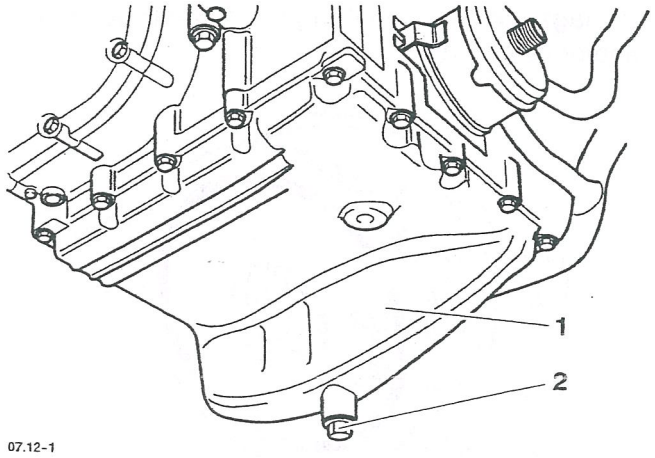

07.12-1

1. Sump

2. Sump plug

4. Replace the sump plug, complete with a new copper washer. Tighten to **25 Nm.**
5. Remove the bracket securing the side stand switch cable.

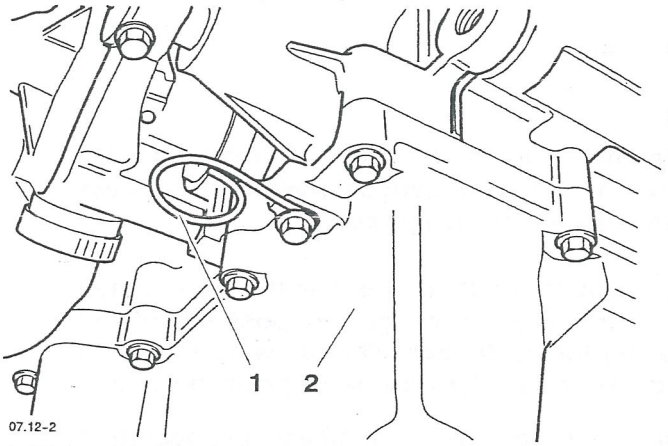

07.12-2

1. Side stand switch cable bracket

2. Sump

6. Progressively release the bolts securing the sump to the crankcase.

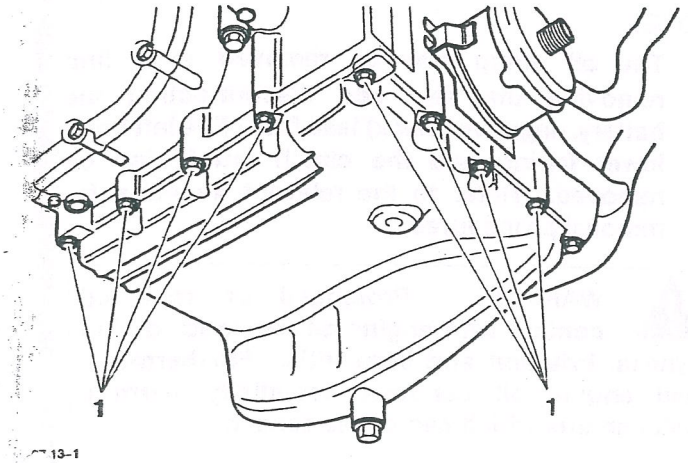

07.13-1

Sump bolts

7. Remove the bolts and lower the sump from the crankcase. Discard the sump gasket.

8. Remove the oil filter, using service tool T3880311.

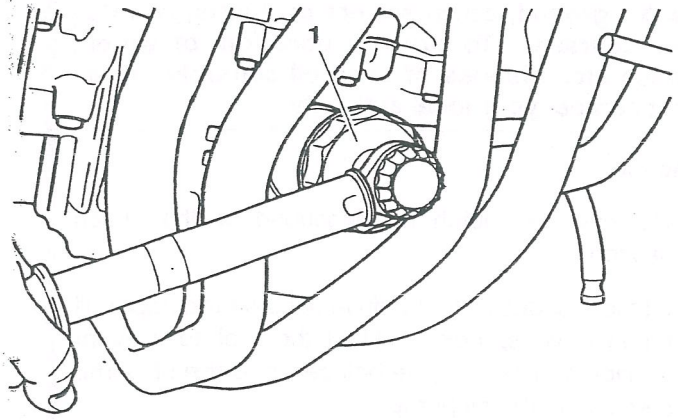

1. Service tool T3880311

Inspection

> **WARNING: Ensure the oil pick-up is clean and free of blockages or restrictions. If the oil flow is restricted oil pressure will be reduced and may cause severe engine damage.**

1. Check the oil pick-up for blockages or restrictions. Remove and clean if found to be blocked or restricted.

2. Check the pressure relief valve 'O' ring for wear and/or damage. Replace if wear and/or damage is found.

Installation

1. If removed, fit the oil pick-up.

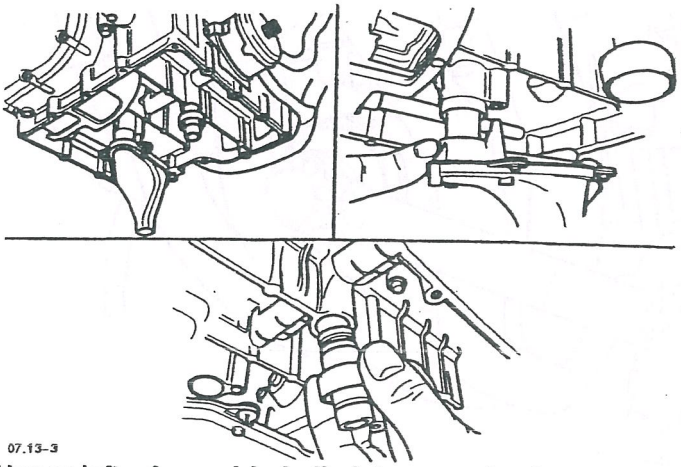

07.13-3

Upper left: Assembled oil pick-up and relief valve

Upper right: Pick-up assembly

Bottom: Relief valve assembly

2. If removed, fit the pressure relief valve.

3. Position the sump gasket to the sump and locate to the crankcase.

4. Fit the bolts to the sump and progressively tighten in the order shown below to **12 Nm.**

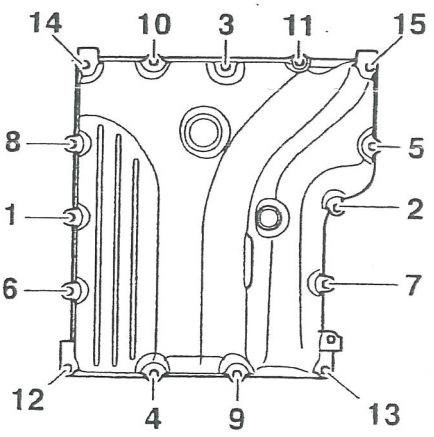

cbgx

Sump bolt tightening sequence

5. Fit the bracket securing the side stand cable. Tighten the bolt to **9 Nm.**

6. Fill a new oil filter with clean engine oil.

7. Apply a smear of clean engine oil to the filter seal and fit to the heat exchanger. Tighten, using service tool T3880311, to **10 Nm.**

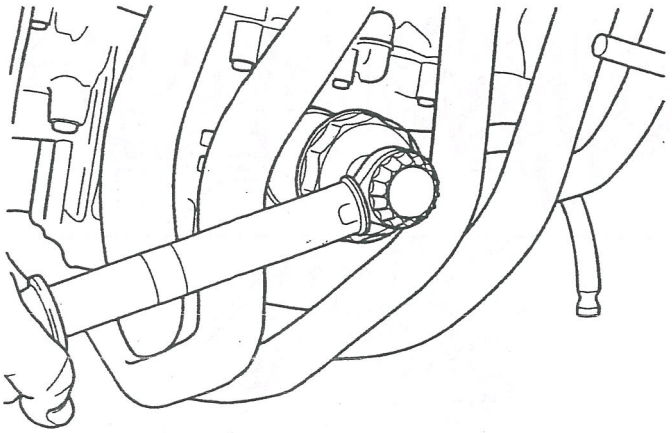

07.13-4

Oil filter replacement

8. Fit the exhaust system, as described in the exhaust section.

9. Fill the engine with new engine oil, as described elsewhere in this section.

10. Fit both lower fairings as described in the body section.

11. Connect the battery leads, positive (red) lead first.

OIL PUMP

NOTE:

- **The oil pump may be removed after first removing the seat and disconnecting the battery, negative (black) lead first. The left hand lower fairing and the clutch must also be removed. Refer to the relevant sections for removal procedures.**

WARNING: Prolonged or repeated contact with engine oil can lead to skin dryness, irritation and dermatitis. Furthermore, used engine oil contains potentially harmful contaminants which can cause cancer.

When handling used engine oil, always wear protective clothing and avoid any skin contact with the oil.

CAUTION: Do not pour engine oil on the ground, down sewers or drains, or into water courses. To prevent pollution of water courses etc., dispose of used oil sensibly. If in doubt contact your local authority

Removal

1. Remove the clutch as described in the clutch section

2. Fit tool T3880370 to the drive dogs on the upper oil pump drive sprocket. Hold the tool to prevent rotation and release the bolt securing the oil pump sprocket to the oil pump.

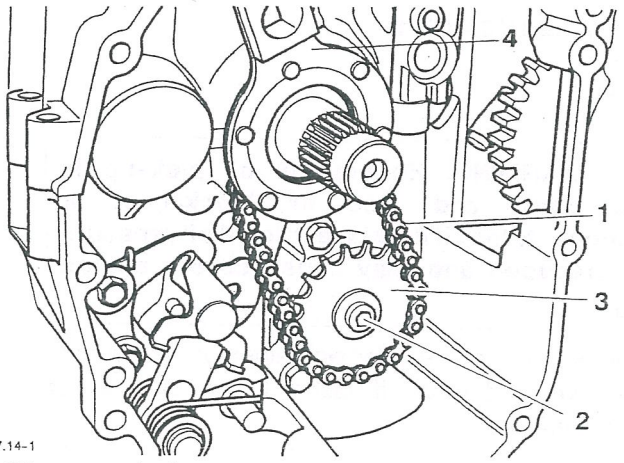

07.14-1

1. Oil pump chain
2. Bolt
3. Sprocket
4. Tool T3880370

3. Remove the tool, sprocket and chain.

4. Release the bolts securing the oil pump to the crankcase and withdraw the oil pump.

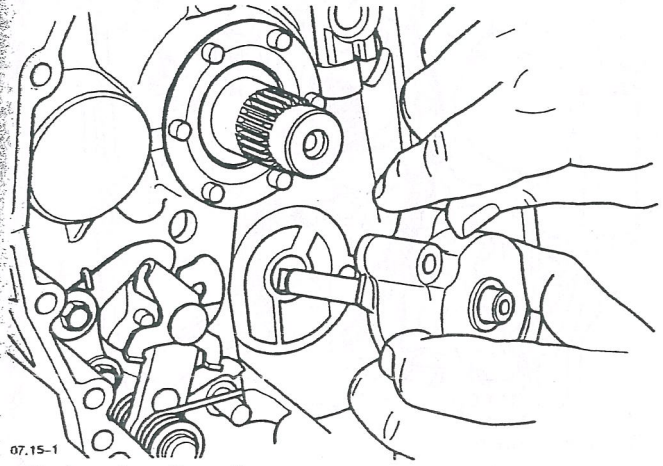

07.15-1

Withdrawing the oil pump.

Inspection

1. Release the screw and withdraw the oil pump plate from the pump body.

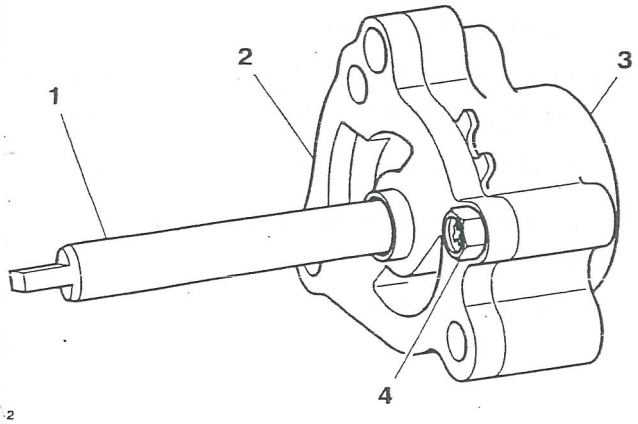

2

1. **Oil pump drive shaft**
2. **Oil pump plate**
3. **Oil pump body**
4. **Screw**

> **CAUTION: If any part of the oil pump is found to be outside the service limit, the complete pump must be replaced. Severe engine damage may result from the continued use of a faulty oil pump.**

2. Measure the rotor tip clearance using feeler gauges.

Service limit	0.20 mm

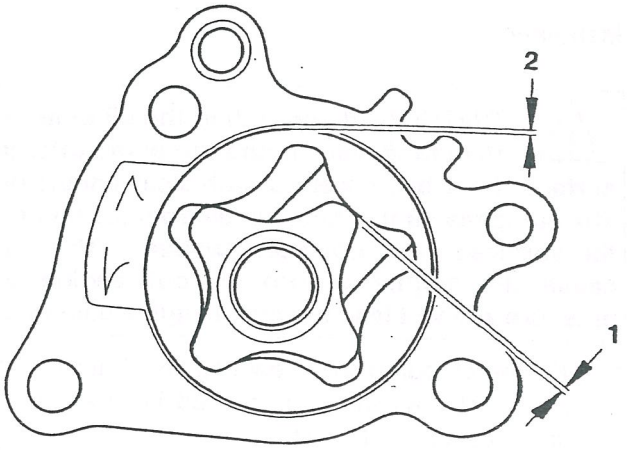

07.15-3

1. **Rotor tip clearance**
2. **Pump body clearance**

3. Measure the pump body clearance using feeler gauges.

Standard	**0.15 – 0.22 mm**
Service limit	**0.35 mm**

4. Measure the pump end clearance.

Standard	**0.02 – 0.07 mm**
Service limit	**0.10 mm**

5. (a) If all clearances are within service limits, liberally apply clean engine oil to all internal components and refit the oil pump plate to the oil pump body.

   (b) If any clearance measured is outside the service limits, renew the complete pump.

6. Inspect all the sprocket and chain for wear and/or damage. Replace the sprocket and chain if wear and/or damage is found.

Installation

CAUTION: Before fitting the oil pump to the crankcase ensure the pump internal surfaces have been 'wetted' with clean engine oil. The pump may fail to pick-up oil from the sump if the surfaces have not been 'wetted'. This will cause the engine to run without engine oil pressure and will lead to severe engine damage.

1. Fill the oil pump with new engine oil, turning the pump rotor as the oil is poured in to ensure all surfaces are coated with oil.
2. Position the oil pump to the crankcase and insert into the opening provided.

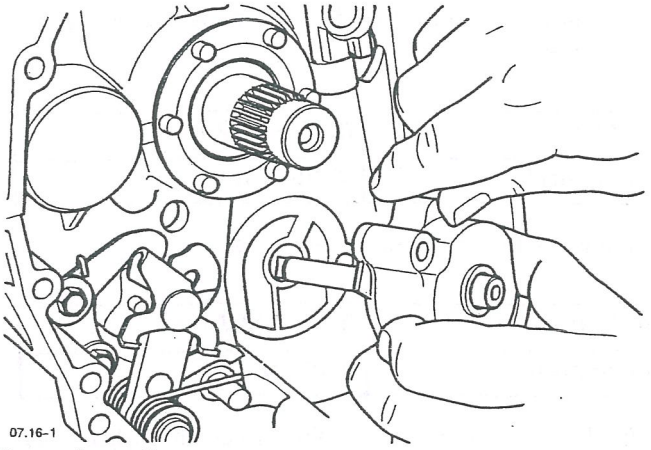

Pump Insertion

NOTE:

- **Use the sprocket end of the oil pump shaft to turn the drive peg in alignment with the drive on the water pump.**

3. Fit the oil pump to the crankcase, ensure the drive peg locates into the drive on the water pump shaft. Tighten the bolts to **13.7 Nm.**
4. Fit the drive chain and sprocket.

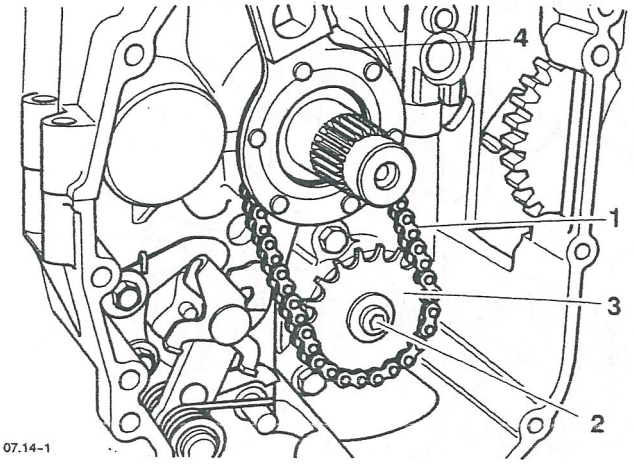

1. Oil pump chain

2. Bolt

3. Sprocket

4. Tool T3880370

5. Fit a new center bolt and washer to the pump sprocket. Assemble the chain and drive sprocket to the pump and input shaft.
6. Refit tool T3880370 to the upper drive sprocket and tighten the centre bolt to **15 Nm.** Remove the tool.
7. Fit the clutch as described in the clutch section.
8. Fit the left hand lower fairing as described in the body section.
9. Reconnect the battery, positive (red lead) first.

FUEL SYSTEM/ENGINE MANAGEMENT

CONTENTS

	Page
Exploded Views	8.3
Fuel requirements	8.7
Glossary of terms	8.7
Engine Management System	8.10
System Description	8.10
System Sensors	8.10
Sensor Locations	8.11
System Actuators	8.12
Actuator Locations	8.13
Circuit Diagram - TT600	8.14
Circuit Diagram - Speed Four	8.16
System Diagnostics	8.18
Service Diagnostic Tool	8.22
Tool Keys	8.23
Diagnostic Test Procedure	8.23
Restarting Tune Download	8.51
Electrical Connectors	8.52
Removal of ECM connectors	8.53
Refitting of ECM connectors	8.53
ECM Connector Pin Numbering	8.53
Further Diagnosis - Electrical	8.53
Further Diagnosis - Non-electrical	8.69
Fuel Tank	8.70
Fuel Tank Removal	8.70
Installation	8.71
Fuel Pump	8.72
Removal	8.72
Assembly	8.73
Fuel Pressure Testing	8.73
Test Procedure	8.73
Fuel Filter	8.74
Removal	8.74
Assembly	8.75
Low Fuel Level Sender	8.75
Removal	8.75
Assembly	8.76
Airbox	8.77
Removal	8.77
Installation	8.77

CONTENTS cont'd

	Page
Air Filter	8.78
Removal	8.78
Assembly	8.78
Intake Air Temperature Sensor	8.78
Removal	8.78
Installation	8.78
Crankshaft Position Sensor	8.79
Removal	8.79
Installation	8.79
Throttle Cable	8.80
Removal	8.80
Examination	8.81
Installation	8.81
Adjustment	8.81
Throttle Bodies	8.82
Removal	8.82
Installation	8.83
Throttle Body Balancing	8.84
Injectors / Fuel Rail / Fuel Pressure Regulator	8.86
Removal	8.86
Disassembly	8.86
Assembly	8.87
Installation	8.87
Idle Air Control Valve	8.88
Removal	8.88
Installation	8.88
Idle CO Setting	8.89
Exhaust System	8.90
Installation	8.91
Evaporative Loss Control System - California Models Only	8.91
Component Locations	8.91
Evaporative Control System - Engine Off.	8.92
Evaporative Control System - Engine Running	8.93
Evaporative Control System - Hose Routing	8.94
Secondary Air Injection System	8.95
System Operation	8.95
Reed Valve Assembly	8.95
Removal	8.95
Disassembly	8.96
Inspection	8.96
Assembly	8.96
Installation	8.96

Exploded View - Fuel Tank and Pump

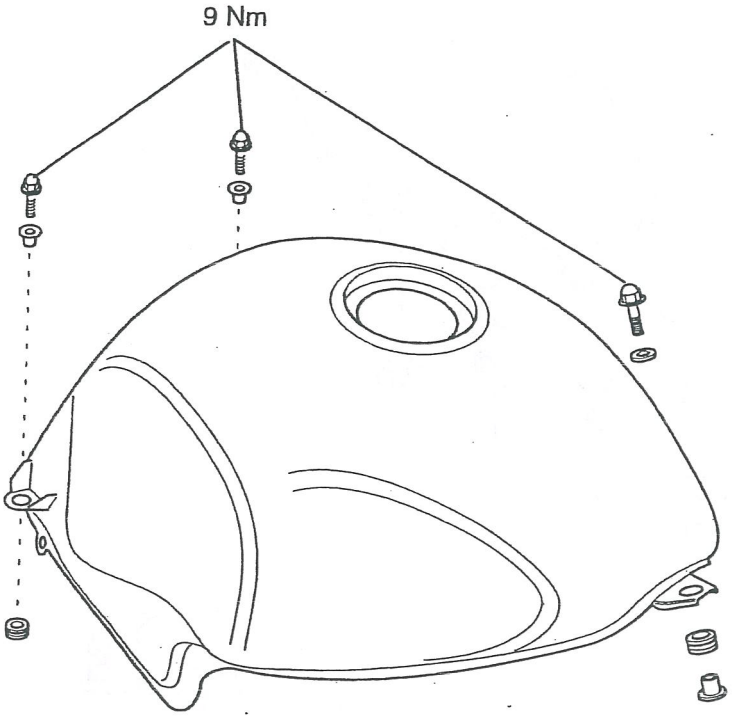

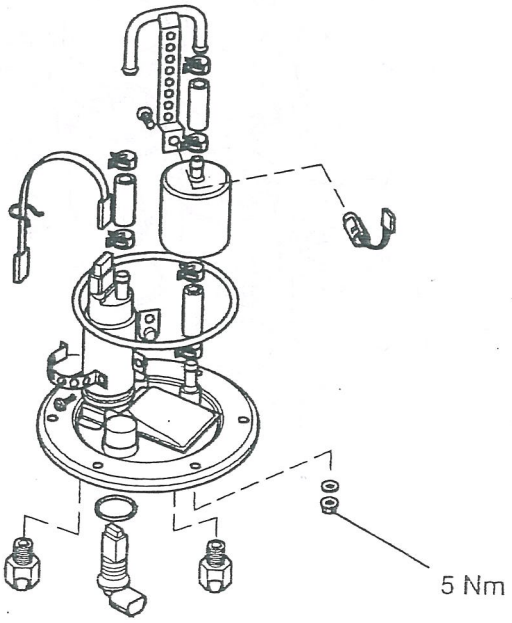

Exploded View - Fuel Rail, Throttles and Injectors

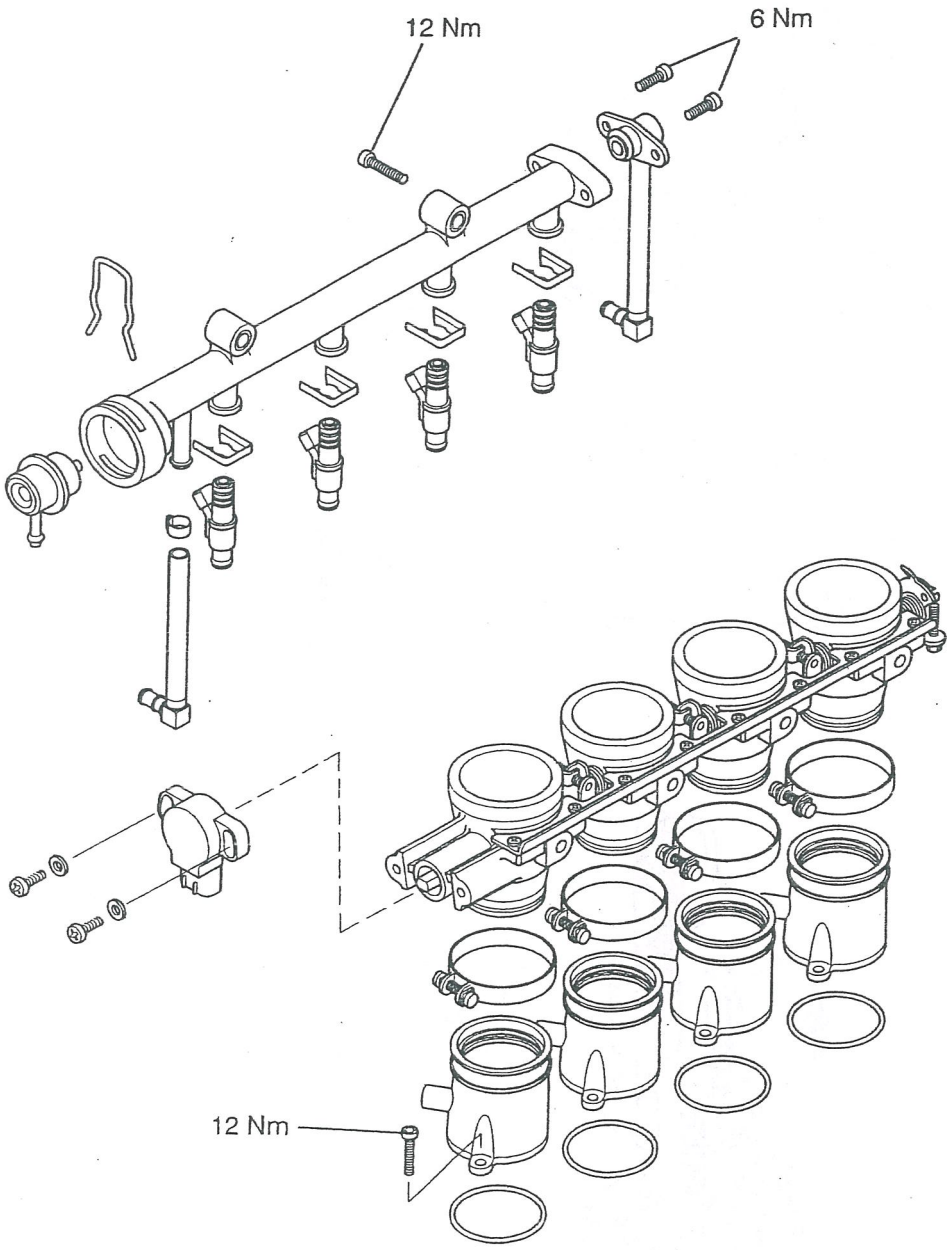

Exploded View - Purge and Idle Air Control

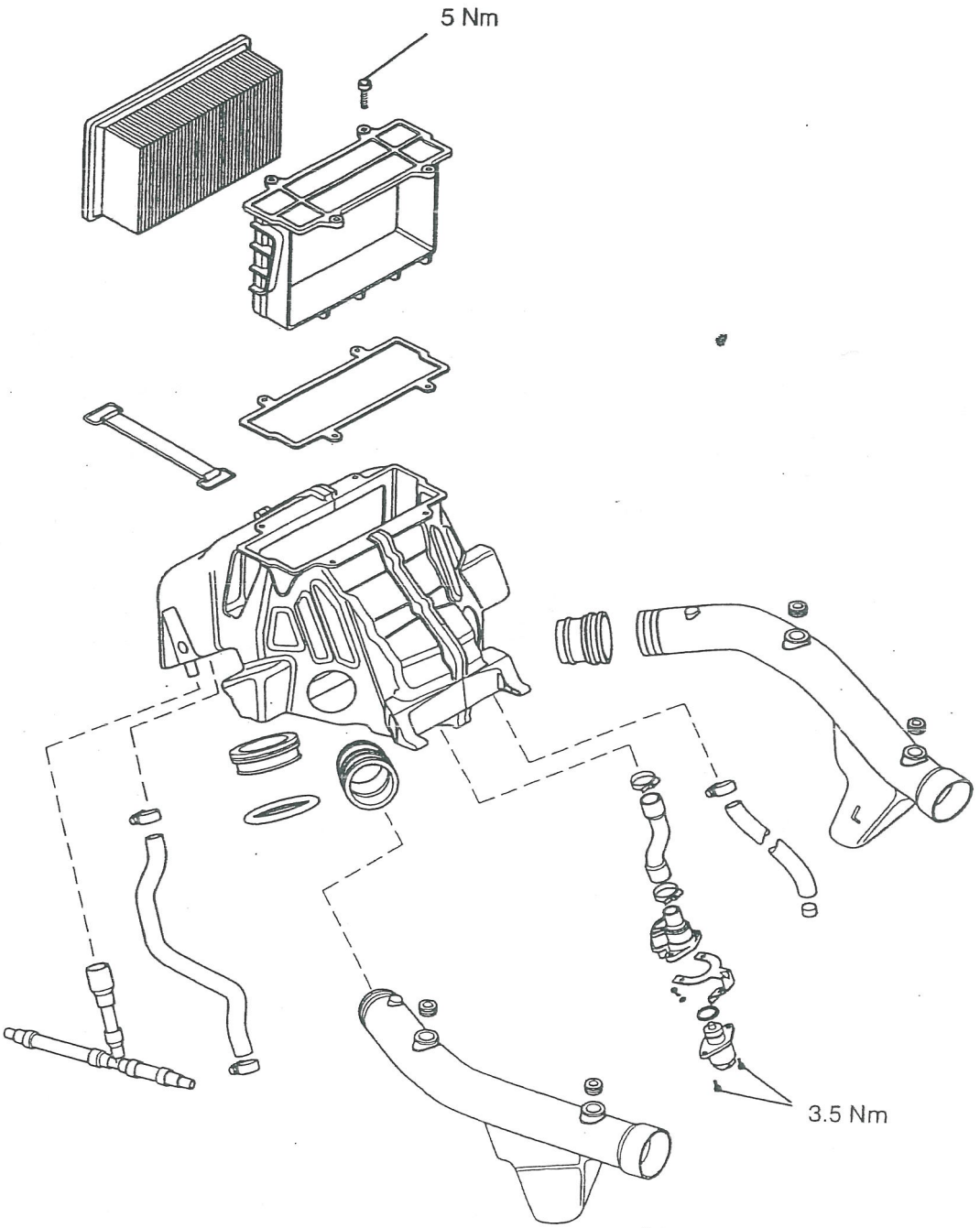

Exploded View - Exhaust System

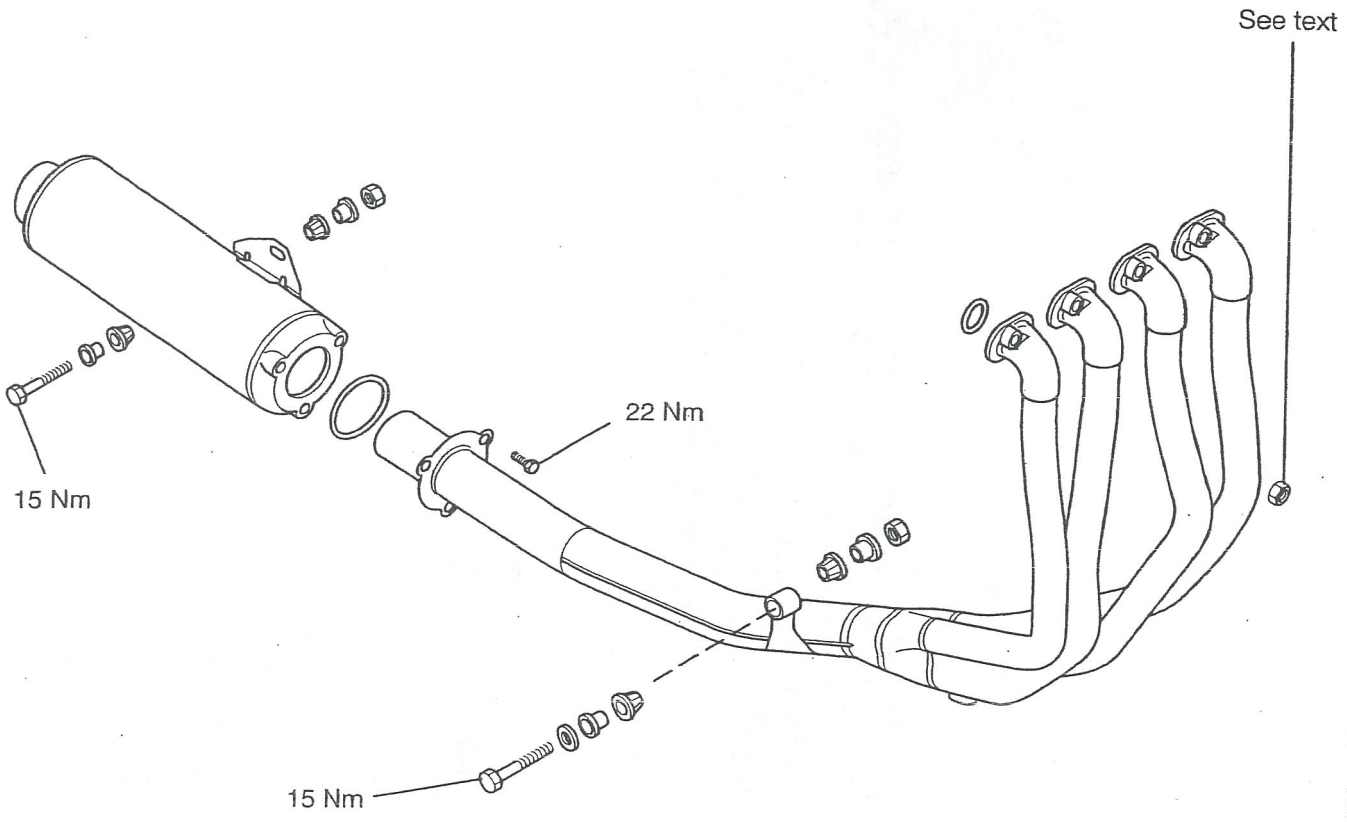

FUEL REQUIREMENTS

Fuel Requirements - all countries except USA

Outside America, all motorcycles are designed to be run on 95 RON unleaded fuel.

Fuel Requirements - USA

In the United States of America where the octane rating of fuel is measured in a different way, the following information may be applied: Triumph motorcycles are designed to run on unleaded gasoline with a CLC or AKI octane rating (R+M)/2 of 89 or higher.

CAUTION: The use of leaded gasoline is illegal in some countries, states or territories. Check local regulations before using leaded gasoline.

Oxygenated Gasoline

To help in meeting clean air standards, some areas of the U.S. use oxygenated gasoline to help reduce harmful emissions. Triumph motorcycles will give best performance when using unleaded gasoline. However, the following should be used as a guide to the use of oxygenated fuels.

CAUTION: Because of the generally higher volatility of oxygenated fuels, starting, engine response and fuel consumption may be adversely affected by their use. Should any of these difficulties be experienced, run the motorcycle on normal unleaded gasoline.

Ethanol

Ethanol fuel is a mixture of 10% ethanol and 90% gasoline and is often described under the names 'gasohol', 'ethanol enhanced', or 'contains ethanol'. This fuel may be used in Triumph motorcycles.

Methanol

CAUTION: Fuels containing methanol should not be used in Triumph motorcycles as damage to components in the fuel system can be caused by contact with methanol.

MTBE (Methyl Tertiary Butyl Ether)

The use of gasolines containing up to 15% MTBE (Methyl Tertiary Butyl Ether) is permitted in Triumph motorcycles.

GLOSSARY OF TERMS

The following terms and abbreviations will be found in this section. Below is given a brief explanation of what some of the more common terms and abbreviations mean.

Adaptive Stepper Position

The position of the idle air control valve stepper motor after adapting to a particular engine's operational characteristics.

Air temperature

The intake air temperature in the air box.

Air temperature sensor

Sensor located in the airbox to detect the temperature of the incoming air.

ATDC

After Top Dead Centre.

Barometric pressure

Pressure of the air in the airbox.

Battery voltage

The voltage at the input to the Electronic Control Module (ECM).

BTDC

Before Top Dead Centre (TDC).

Calculated load

The actual volume of air per stroke flowing into the engine, expressed as a percentage of the maximum volume that can enter. Provides an indication of the percent engine capacity that is being used (100% = full throttle).

Catalyst

Device placed in the exhaust system which reduces exhaust emissions.

Closed throttle position

Throttle position at idle (i.e. against end stop), measured as a voltage and expressed as percentage.

0% = 0 volts

100% = 5 volts

Coolant temperature

The coolant temperature in the cylinder head.

Coolant temperature sensor

Sensor which detects coolant temperature.

Cooling fan status

The 'on' or 'off' condition of the cooling fan.

Corrected Throttle Position

The electronic value of the throttle position corrected according to the closed value of the throttle potentiometer. The reading for corrected throttle position will be different to the actual throttle position.

DTC

Diagnostic Trouble Code.

ECM

Engine Control Module.

Engine speed

The crankshaft revolutions per minute.

Freeze frame

A data set captured at the time a Diagnostic Trouble Code (DTC) is set.

IACV

Idle Air Control valve.

Idle air control valve stepper position

The position of the idle air control valve stepper motor;

0 = fully closed.

180 = fully open

Idle fuel trim

The percentage above or below the nominal fuel requirement for the volume of air entering at idle.

Idle fueling

Adjustment of fueling at idle to suit the actual air inducted.

Idle reference speed

The target idle speed as determined by the Electronic Control Module (ECM). (It should be the same as the actual idle speed if the motorcycle is operating correctly.)

Ignition advance

The timing of ignition at the spark plug relative to top dead centre.

Ignition switch position

The 'on' or 'off' position of either or both the ignition switch and the engine stop switch.

Ignition timing

Same as 'ignition advance'.

Injector pulse time

The time during which an injector remains open (i.e. delivering fuel).

Long term fuel trim

Fueling after adapting to the engine's long term fueling requirements (closed loop only). See also short term fuel trim.

MIL

Malfunction Indicator Lamp.

Illuminates when most Diagnostic Trouble Codes (DTC's) are set.

Neutral switch status

The 'neutral' or 'in gear' status of the gearchange.

Off idle fuel trim

The percentage above or below the nominal fuel requirement for the volume of air entering at engine speeds other than idle. This function is not currently used in the Triumph system.

Open circuit

A break in an electrical circuit – current cannot flow.

Over temp'

High temperature within the Electronic Control Module (ECM) caused by an internal or external failure.

Purge valve duty cycle

The time the purge valve is open in an open / close cycle, expressed as a percentage of the cycle time.

Sensor reference voltage

Supply voltage to the throttle potentiometer (nominally 5 volts).

Short circuit

A 'short cut' in an electrical circuit – current by-passes the intended circuit (usually to earth).

Short term fuel trim

A correction applied to the fuel mixture during closed loop catalyst operation. This, in turn has an effect on the long term fuel trim in that, if an engine constantly requires mixture correction, the long term fuel trim will adapt to requirement thus reducing the need for constant short term adjustment.

Sidestand status

The 'up' or 'down' position of the side stand.

Target dwell time

The actual time from coil 'on' to coil 'off'.

Throttle position

The position of the throttle butterfly given as a percentage of the movement range. When the data is displayed on the tool, fully open need not be 100% nor fully closed 0%. Generally, fully open will be in the 70% range. (See also corrected throttle position).

Throttle voltage

Voltage at the throttle potentiometer.

Vbatt

Battery voltage.

ENGINE MANAGEMENT SYSTEM

System Description

This model is fitted with an electronic engine management system which encompasses control of both ignition and fuel delivery. The electronic control module (ECM) draws information from sensors positioned around the engine, cooling and air intake systems and precisely calculates ignition advance and fueling requirements for all engine speeds and loads.

In addition, the system has hardware diagnostic functions similar to the US state of California requirements for on-board diagnostics (OBDII). This function ensures that, should a malfunction occur in the system, the malfunction type and engine data at the time the malfunction occurred are stored in the ECM memory. This stored data can then be recovered by a Triumph dealer using a special service tool which is mandatory for all Triumph dealers. In this way, precise diagnosis of a fault can be made and the fault quickly rectified.

System Sensors

- **Intake air temperature sensor** - situated at the rear of the airbox, between the air filter element and the air intakes.
  As the density of the air (and therefore the amount of oxygen available to ignite the fuel) changes with temperature, an intake air temperature sensor is fitted. Changes in air temperature (and therefore air density) are compensated for by adjusting the amount of fuel injected to a level consistent with clean combustion and low emissions.

- **Barometric pressure sensor** - situated in the Electronic Control Module (ECM), the barometric pressure sensor measures atmospheric air pressure. From this measurement the air density is calculated, and when added to other inputs to the ECM, the engine load is calculated. With this information, the amount of fuel per injection is adjusted to suit the prevailing conditions.

- **Crankshaft position sensor** - situated on top of the crankcase directly above the alternator cover. The crankshaft position sensor detects movement of a toothed wheel attached to the alternator rotor.

  The toothed wheel has a number teeth which are evenly spaced, and one triple length tooth next to a triple length gap. The triple length tooth/gap gives a reference point from which the actual crankshaft position is calculated. The crankshaft position sensor information is used by the ECM to determine engine speed and crankshaft position in relation to the point where fuel is injected and ignition of the fuel occurs.

- **Engine coolant temperature sensor** - situated on the left hand side of the cylinder head. Coolant temperature information, received by the ECM, is used to optimise fueling at all engine temperatures and to calculate hot and cold start fueling requirements.

- **Throttle position sensor** - situated at the right hand end of the throttle spindle. In relaying information to the ECM, all other throttle opening angles are calculated using the fully closed position as a base. Throttle angle is used by the ECM to determine fueling requirements for all throttle positions.

- **Neutral switch** - situated in the gearbox. The neutral switch indicates when the transmission is in neutral. In addition, the neutral switch provides an interlock facility preventing the rider from riding off with sidestand down. If a gear is selected with the sidestand down, the ECM will cause the engine to cut-out.

- **Side stand switch** - situated at the top of the sidestand leg. If the sidestand is in the down position, the engine will not run unless the transmission is in neutral.

Engine Management System

Sensor Locations

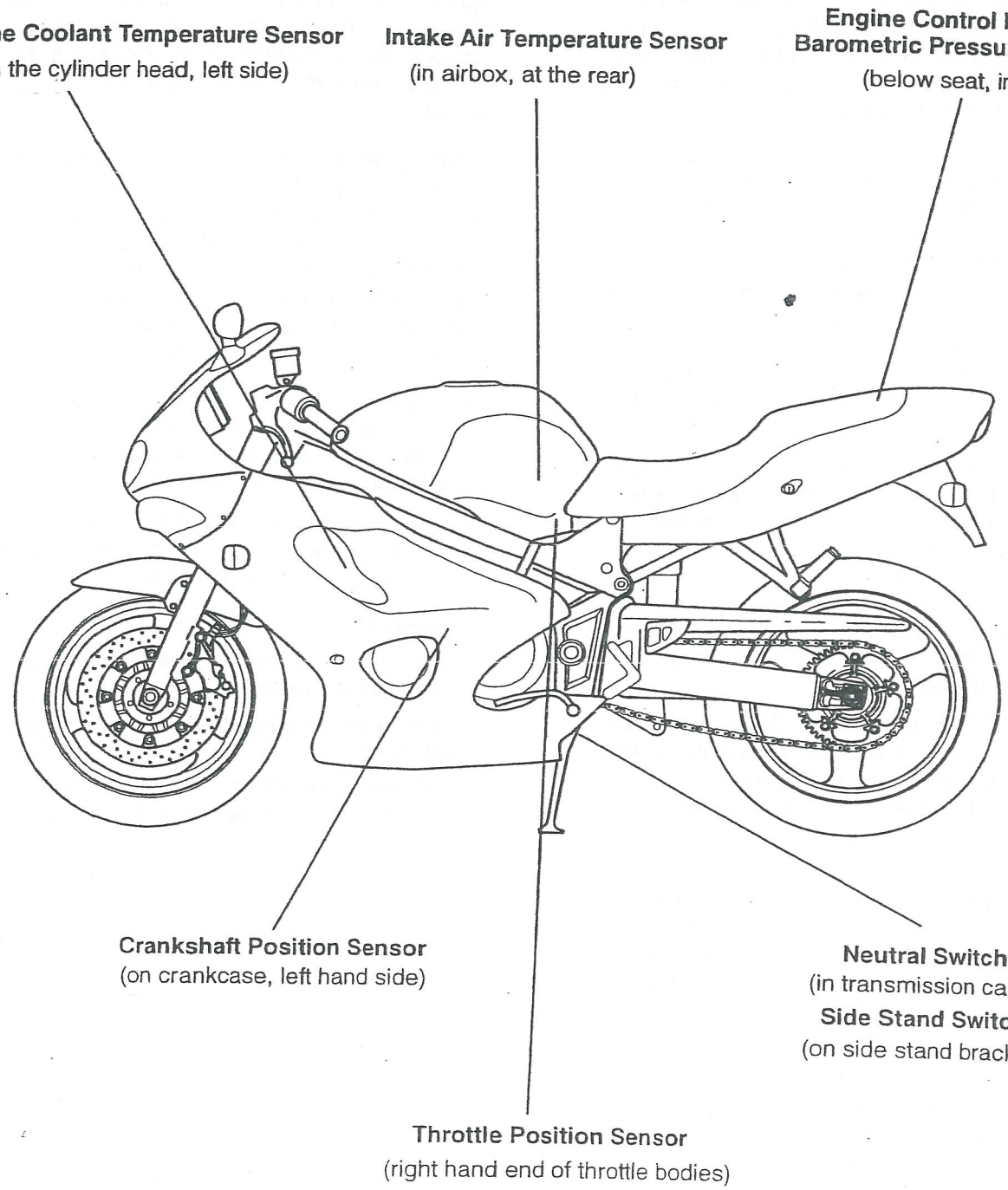

System Actuators

In response to signals received from the sensors, the ECM controls and directs messages to a series of electronic and electro-mechanical actuators. The function and location of the actuators is given below.

- **Idle Air Control System** - Locate on a bracket mounted on the rear of the crankcase. The idle air control system comprises an air control valve, (connected to the airbox by a rubber hose), and a stepper motor. The system has a controlling influence over the following:
  - Idle speed
  - Induction air supply during engine overrun.
  - Air/fuel ratio correction when operating at altitudes above sea level.
  - Cold and hot start air/fuel ratio correction.

  When in operation, the stepper motor opens the air control valve by a variable distance, allowing a controlled supply of air to flow along a series of pipes, into the induction system. The air is fed to a point between the throttle plates and the inlet valves.

  Idling - When the engine is idling, the stepper motor opens the idle air control valve allowing air to be fed to the engine even though the throttles are closed. The distance that the idle air control valve is opened is controlled by the ECM using information received from the coolant temperature sensor, barometric pressure sensor etc. Idle air fuel ratio is adjusted by feeding more or less air to mix with the fuel supplied by the injectors.

  Overrun - During overrun conditions, where air flow into the cylinder is very low, the idle air control system feeds additional air to the induction system allowing normal air/fuel ratios to be maintained.

  Altitude correction - If the motorcycle is operated at high altitude, the reduced air density will be compensated for by varying the amount of air fed to the engine via the idle air control system. For example, at high altitudes, the idle air control system feeds a greater volume of air to the induction system to compensate for the air's reduced oxygen content.

  Cold and hot start - Except in very cold conditions where a small amount of throttle opening aids cold start performance, the engine is usually started with the throttle in the closed position. The idle air control system regulates the start-up air supply to the induction system.

- **Canister purge valve (California models only)** - situated in the vapour return line between the carbon canister and the throttle. The purge valve controls the return of vapour which has been stored in the carbon canister during the period when the engine is switched off. The valve is 'pulsed' by the ECM to give control over the rate at which the canister is purged.

- **Injectors** - located in the throttle body assembly. The engine is fitted with four injectors which are targeted at the back face of the inlet valves. The spray pattern of the injectors is fixed but the length of time each injector remains open is variable. The duration of each injection is calculated by the ECM using data received from the various sensors in the system.

- **Plug top ignition coils** - mounted directly onto the top of each spark plug. The ECM controls the point at which the coils are switched on and off. In calculating the switch-on time, the ECM allows sufficient time for the coils to charge to a level where a spark can be produced. The coils are switched off at the point of ignition, the timing of which is optimised for good engine performance.

- **Main power relay** - located beneath the motorcycle seat. When the ignition is switched on, the main power relay is powered up to provide a stable voltage supply for the ECM.

  When the ignition is switched off, the ECM holds the main power relay on so that it can carry out the power down procedure which includes;

  - writing data to the ECM memory,
  - referencing the position of the idle air control valve stepper motor,
  - running the cooling fan until the engine is sufficiently cool.

  Once all the power down procedures have been carried out, the main power relay is turned off.

- **Fuel pump** - located inside the fuel tank. The electric pump delivers fuel into the fuel system, via a pressure regulator, at a constant 3 bar pressure. The pump is run continuously when the engine is operating and is also run briefly when the ignition is first switched on to ensure that 3 bar is available to the system as soon as the engine is cranked.

- **Cooling fan** - located in front of the radiator. The ECM controls switching on and off of the cooling fan in response to a signal received from the coolant temperature sensor. When the coolant temperature rises to a level where the cooling effect of natural airflow is insufficient, the cooling fan is turned on by the ECM. When the coolant temperature falls sufficiently, the ECM turns the cooling fan off. If the engine is switched off when the fan is running, the fan will continue to run until the temperature has been reduced to a normal level.

Engine Management System

Actuator Locations

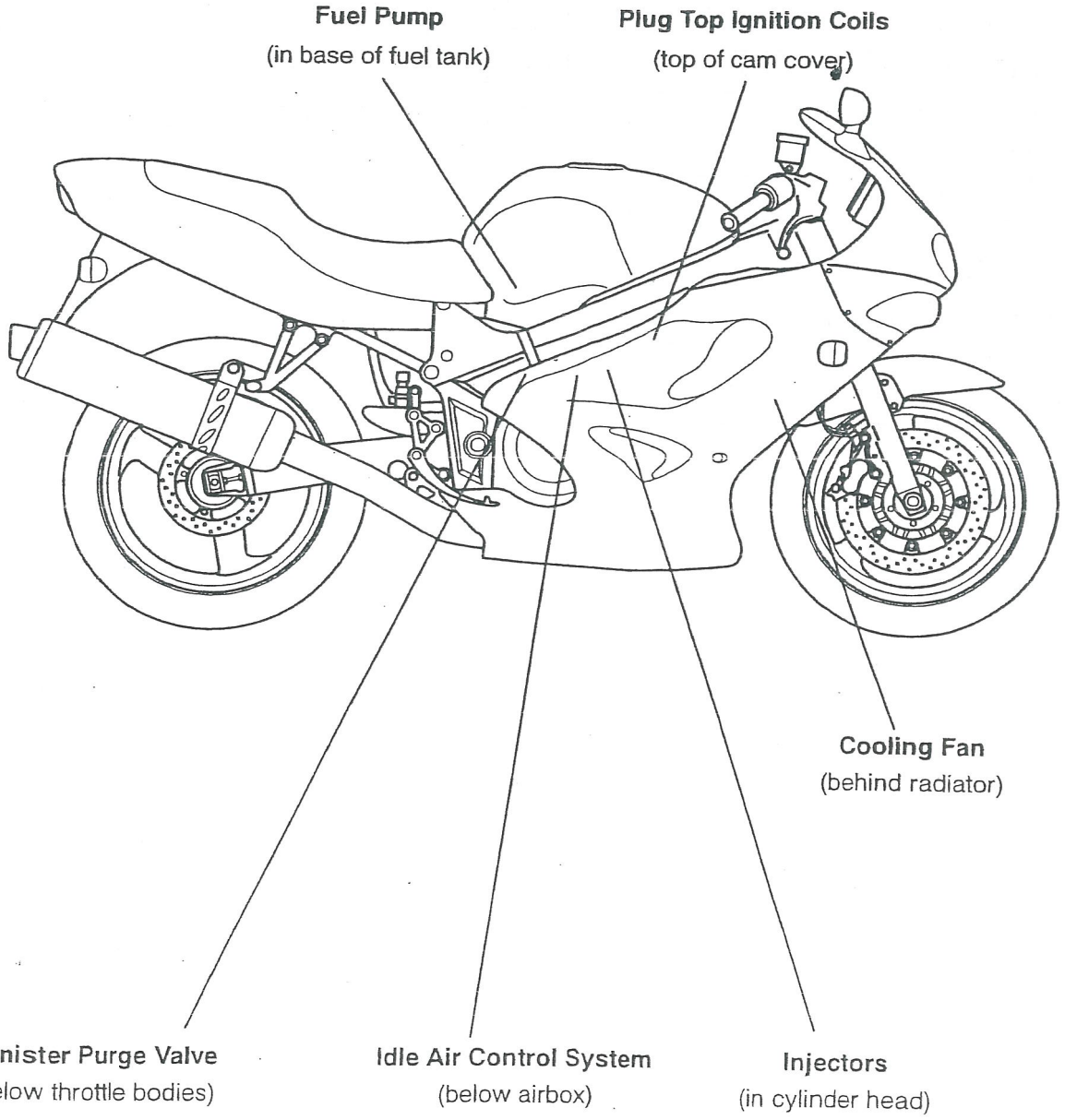

ENGINE MANAGEMENT CIRCUIT DIAGRAM - TT600

Key To Wiring Circuit Diagram

Key	Item
1	Engine connector
2	Engine control module
3	Fuel pump
4	Evaporative system purge valve
5	Ignition coils
6	Fuel injectors
7	Cooling fan
8	Diagnostic connector
9	Idle air control valve stepper motor
10	Low fuel level sensor
11	Side stand switch
12	Throttle position sensor
13	Intake air temperature sensor
14	Oil pressure switch
15	Coolant temperature sensor
16	Neutral switch
17	Crankshaft position sensor

Key To Wiring Colour Codes

Code	Wiring Colour
B	Black
U	Blue
N	Brown
G	Green
S	Grey
O	Orange
K	Pink
R	Red
P	Purple
W	White
Y	Yellow
LG	Light Green
LU	Light blue

Circuit Diagram - Engine Management System - TT600

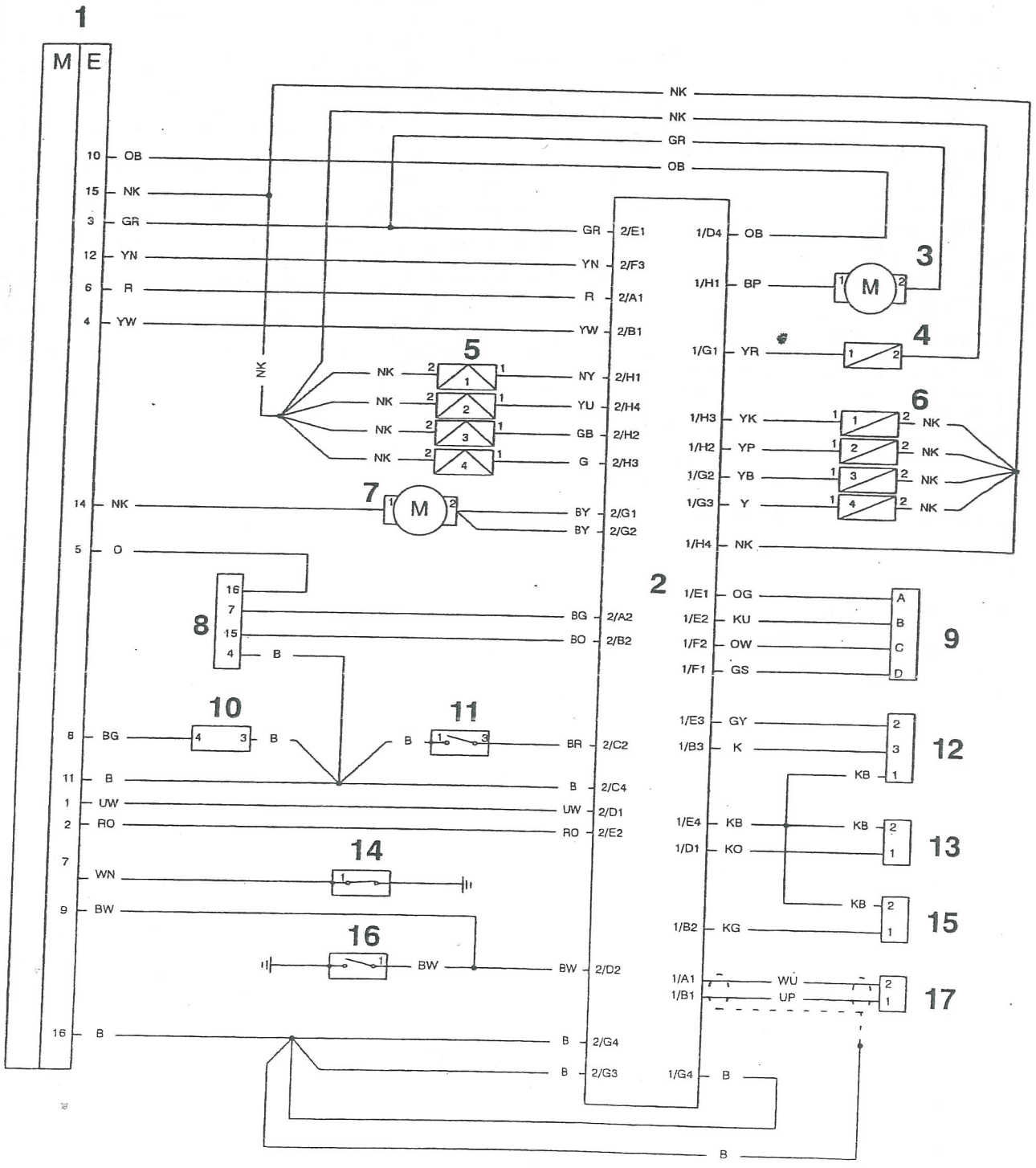

Circuit Diagram - Engine Management System - Speed Four

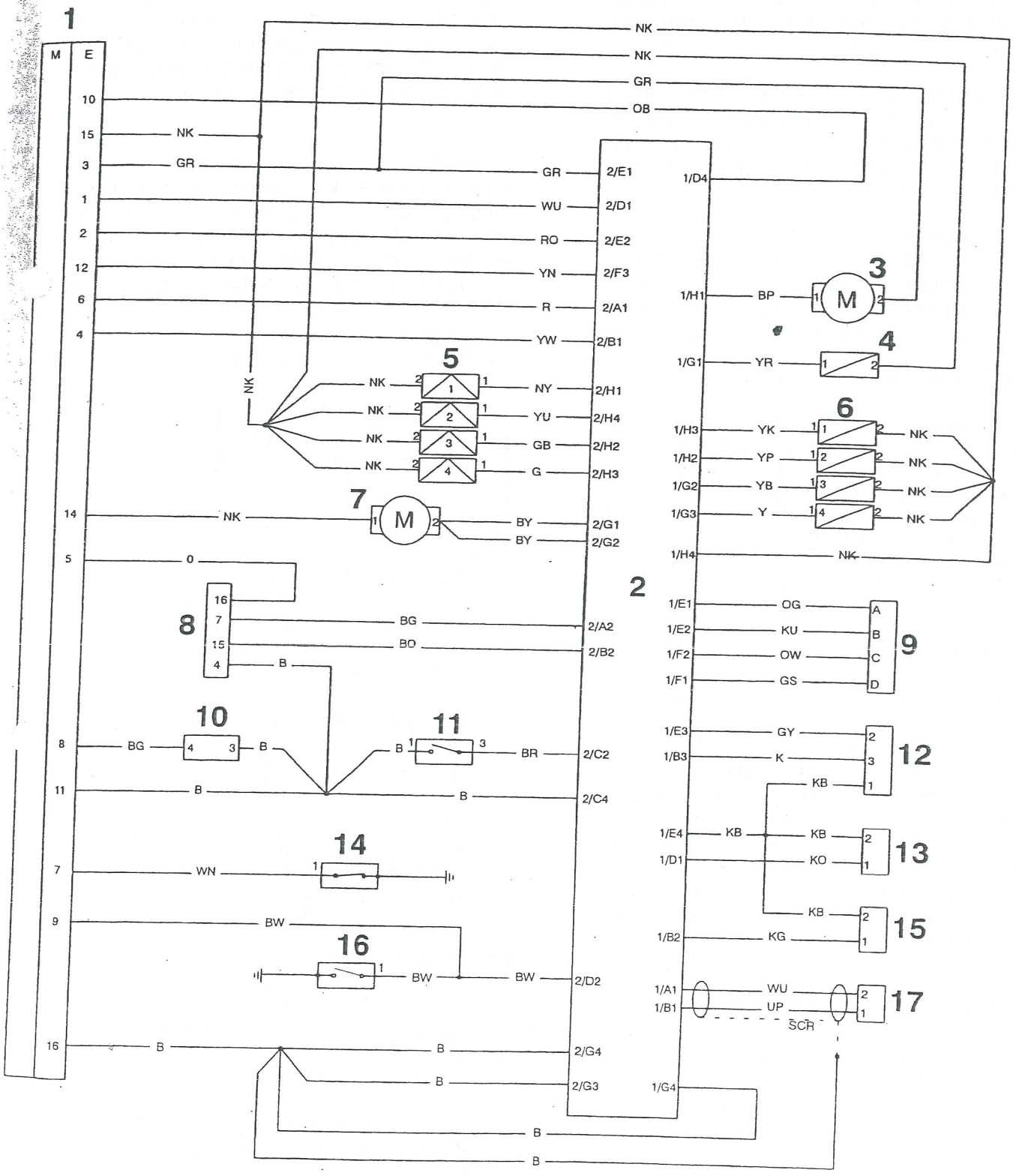

System Diagnostics

The engine management system has an on-board diagnostics feature which allows service technicians to retrieve stored data from the ECM using a Triumph service tool. **Full details of the tool's operation and how to interpret the results are given elsewhere in this section.**

The tool is connected to the motorcycle using a dedicated diagnostic plug situated beneath the seat. By using a dedicated plug, no electrical connectors associated with the system are disturbed reducing potential connector damage.

The tool allows the user to retrieve data associated with the system sensors and actuators, test various component functions, read build data and make minor adjustments to the set-up of the system. The data and tests available are described on the following pages.

On-board Fault Detection System

The on-board diagnostic system has two stages to fault detection. When a fault is detected, the DSM (Diagnostic Status Manager) raises a flag to indicate that a fault is present and increments a counter. The counter checks the number of instances that the fault is noted. For example, if there is a fault in the crankshaft position sensor, the counter will increment its count each time the crankshaft turns through 360°, provided the fault is still present.

When the count begins, the fault is detected but not confirmed. If the fault continues to be detected and the count reaches a pre-determined threshold, the fault becomes confirmed. If the fault is an emissions related fault or a serious malfunction affecting engine performance, a DTC (Diagnostic Trouble Code) and freeze-frame data will be logged in the ECM's memory and the MIL (Malfunction Indicator Lamp) on the motorcycle instrument panel is illuminated. Once a fault is confirmed, the number of warm-up cycles made by the engine is counted. If the fault clears, the warm-up cycle counter will extinguish the MIL (Malfunction Indicator Lamp) at a pre determined count, and erase the DTC and freeze frame data from the ECM memory at another (higher) count.

A single warm-up cycle is deemed to have taken place when the following criteria have been met:

- The coolant temperature must be raised to 72°C or more.
- The coolant temperature must have risen by 23°C or more from its start temperature, when 72°C is reached.
- A controlled power-down sequence must take place.

NOTE:

- **When a fault has been rectified, the MIL will remain illuminated until sufficient non-fault warm-up cycles have taken place to turn it off. The MIL will be immediately extinguished if, after first rectifying the fault, the DTC (diagnostic trouble code) that caused the MIL illumination is erased from the ECM memory using the Triumph diagnostic tool.**

NOTE:

- **In most cases, when a fault is detected, the engine management system will revert to a 'limp-home' mode. In this mode, the engine will still function though the performance and fuel economy may be marginally affected. In some cases, the rider may not notice any appreciable difference from normal operation.**

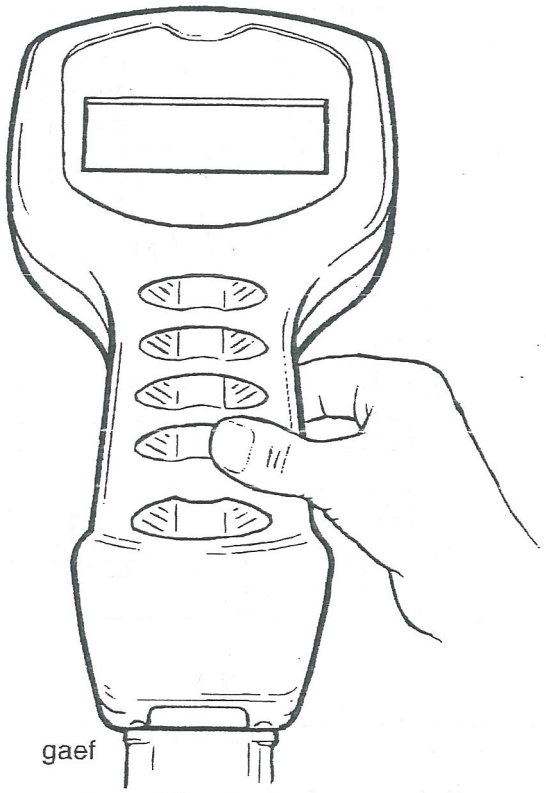

Triumph Diagnostic Tool

Described on the following pages is the range of information which can be retrieved from the ECM's memory and the adjustments which can be performed using the Triumph service diagnostic tool.

The tables indicate which tests are performed by the on-board system and what information can be retrieved by the Triumph diagnostic tool.

Full details of how to operate the tool and how to interpret the data follow later in this section.

Current Data

By using the Triumph diagnostic tool, live engine data (engine running) can be recovered from the motorcycle. The data available is:-

Function Examined	Result Reported (Scale)
Calculated load	0-100%
Coolant temperature	-40- +215°C
Idle fuel trim	-100 - + 99.2%
Off idle fuel trim	Not Used
Engine speed	0 - 16,383 RPM
Air temperature	-40 - +215°C
Ignition Advance	-64° - +63.5°
Throttle Position	0-100%

Freeze-frame Data

Freeze frame data is stored at the time a DTC is recorded (confirmed) by the ECM. If multiple DTCs are recorded, the freeze-frame data which is stored will relate to the first recorded DTC only.

By calling up freeze frame data associated with the first recorded DTC, the technician can check the engine condition at the time the fault occurred. The data available is:-

Function Memorised	Result Reported (Scale)
Calculated load	0-100%
Coolant temperature	-40- +215°C
Idle fuel trim	-100 - + 99.2%
Off idle fuel trim	Not Used
Engine speed	0 - 16,383 RPM
Air temperature	-40 - +215°C
Ignition Advance	-64° - +63.5°
Throttle Position	0-100%
Barometric pressure	0 - 983 mm/Hg

Function Tests

The system allows the diagnostic tool to perform a series of function tests on various actuators in the engine management system. In some cases it is necessary to make a visual observation of a component and in other, if faults are present, DTCs will be logged.

The function tests available are:-

Function Examined	Result Reported
Fuel pump test	None (observation only)
Fuel pump priming	None (observation only)
Cooling fan	None (observation only)
Instrument panel	Observation/DTCs
Purge valve	DTCs
Idle Air Control Valve	Observation/DTCs

Checks/Adjustments

Adjustments

Using the Triumph diagnostic tool, it is possible to adjust the value of two items which affect the idle speed and idle emission settings of the system.

The tool allows adjustment of these items by making small changes to certain parts of the ECM software.

The values that can be adjusted are

Setting Adjusted	Setting Affected
Closed Throttle position	Voltage value of closed throttle threshold
Idle fueling	Idle emissions
Adaptive stepper position	IACV start point

NOTE:

- **In special circumstances, Triumph will make available a password which can be keyed into the tool which will allow download of a completely new engine tune. This special facility will be made available only when necessary. For example, this may be necessary if a motorcycle is transferred to a country or area where legislation requires a different tune to the original version installed at the factory.**

Diagnostic Trouble Codes

Diagnostic trouble codes (DTCs) are logged in the ECM memory when there is a confirmed fault in the system.

The codes are reported to the Triumph diagnostic tool as a four digit code, as required by California legislation.

As mentioned earlier, when the system detects a fault, it begins to count the number of times the fault occurs before illuminating the MIL and storing a fault code.

Similarly, if a fault clears, the ECM also records this fact and will turn off the MIL when sufficient no-fault warm-up cycles have taken place. Any fault codes will remain in the ECM memory until the required number of no-fault warm-up cycles have taken place. The number of warm-up cycles required to extinguish the MIL will always be less than the number required to remove a DTC from the ECM memory. DTCs can be removed at any time using the Triumph diagnostic tool

The system will log the diagnostic trouble codes listed below/over:-

Diagnostic Trouble Code (DTC)	Fault Description	Number of no-fault cycles before turning off MIL	Number of no-fault cycles before DTC is erased	MIL illuminated when fault is logged
P0335	Crankshaft sensor circuit malfunction	3	40	Yes
P1335	Crankshaft sensor incorrect sequence pattern	3	40	Yes
P0201	Injector 1 circuit malfunction	3	40	Yes
P0202	Injector 2 circuit malfunction	3	40	Yes
P0203	Injector 3 circuit malfunction	3	40	Yes
P0204	Injector 4 circuit malfunction	3	40	Yes
P1201	Injector 1 open circuit/short to ground	3	40	Yes
P1202	Injector 2 open circuit/short to ground	3	40	Yes
P1203	Injector 3 open circuit/short to ground	3	40	Yes
P1204	Injector 4 open circuit/short to ground	3	40	Yes
P1205	Injector 1 short to battery voltage/over temperature	3	40	Yes
P1206	Injector 2 short to battery voltage/over temperature	3	40	Yes
P1207	Injector 3 short to battery voltage/over temperature	3	40	Yes
P1208	Injector 4 short to battery voltage/over temperature	3	40	Yes
P0105	Barometric pressure sensor circuit malfunction	3	40	Yes
P0122	Throttle position sensor low input	3	40	Yes
P0123	Throttle Position sensor high input	3	40	Yes
P0444	Purge valve system open circuit/short circuit to ground	3	40	Yes
P0445	Purge valve system short circuit to battery voltage/ over temperature	3	40	Yes
P0351	Ignition coil 1 malfunction	3	40	Yes
P0352	Ignition coil 2 malfunction	3	40	Yes
P0353	Ignition coil 3 malfunction	3	40	Yes
P0354	Ignition coil 4 malfunction	3	40	Yes

Diagnostic Trouble Code (DTC)	Fault Description	Number of no-fault cycles before turning off MIL	Number of no-fault cycles before DTC is erased	MIL illuminated when fault is logged
P1351	Ignition coil 1 open circuit/short circuit to ground	3	40	Yes
P1352	Ignition coil 2 open circuit/short circuit to ground	3	40	Yes
P1353	Ignition coil 3 open circuit/short circuit to ground	3	40	Yes
P1354	Ignition coil 4 open circuit/short circuit to ground	3	40	Yes
P1355	Ignition coil 1 short to battery voltage/over temperature	3	40	Yes
P1356	Ignition coil 2 short to battery voltage/over temperature	3	40	Yes
P1357	Ignition coil 3 short to battery voltage/over temperature	3	40	Yes
P1358	Ignition coil 4 short to battery voltage/over temperature	3	40	Yes
P0117	Engine coolant temperature too high	3	40	Yes
P0118	Engine coolant temperature too low	3	40	Yes
P0119	Engine coolant sensor high voltage	3	40	Yes
P0110	Intake air temperature sensor circuit malfunction	3	40	Yes
P0112	Intake air temperature too high	3	40	Yes
P0113	Intake air temperature too low	3	40	Yes
P0230	Fuel pump fault	3	40	Yes
P1231	Fuel pump open circuit	3	40	Yes
P1232	Fuel pump short circuit	3	40	Yes
P1560	Sensor supply voltage circuit fault	3	40	Yes
P0560	System voltage malfunction	3	40	Yes
P0562	System voltage low	3	40	Yes
P0563	System voltage high	3	40	Yes
P1601	MIL open circuit/short to ground	N/A	40	No
P1602	MIL short to battery voltage	N/A	40	No
P1552	Cooling fan short circuit/open circuit	3	40	Yes
P1553	Cooling fan short to battery voltage/over temperature	3	40	Yes
P1116	Coolant temperature signal short circuit/open circuit	N/A	40	No
P1117	Coolant temperature signal short to battery voltage/over temperature	N/A	40	No
P1386	Tachometer short circuit/open circuit	N/A	40	No
P1387	Tachometer short to battery voltage/over temperature	N/A	40	No

Checks

When using this function it is possible to check the status of various sensors and actuators and also check certain items of factory data logged during vehicle assembly.

The data available is:-

Item Checked	Result Unit
Air temperature sensor	Volts
Air temperature	Degrees Celsius
Coolant temperature sensor	Volts
Coolant temperature	Degrees Celsius
Engine speed	RPM
Idle reference speed	RPM
Battery voltage	Volts
Sensor reference voltage	Volts
Injector pulse time	Milliseconds
Barometric pressure	mm/Hg
Calculated load	Percentage
Target dwell time	Milliseconds
Ignition timing	Degrees BTDC/ATDC
Throttle voltage	Volts
Corrected Throttle position	Percentage
Purge valve duty cycle	Percentage
Idle air control valve stepper position	Incremental steps ranging from 0 to 255
Ignition switch position	On/Off
Cooling fan status	On/Off
Sidestand status	Up/Down
Neutral switch status	Neutral/In gear

SERVICE DIAGNOSTIC TOOL

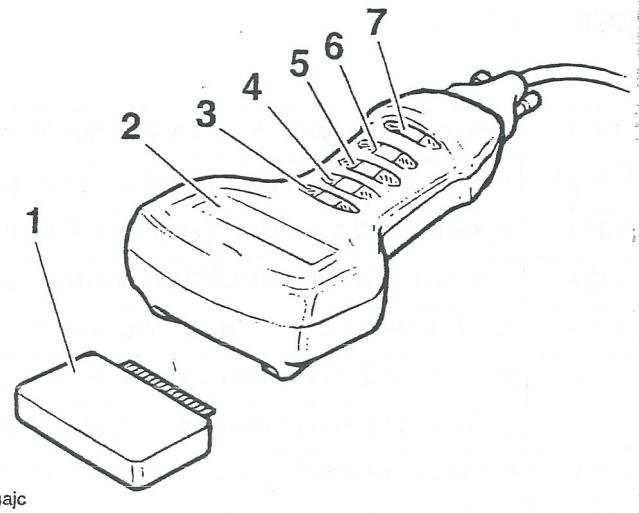

gajc

1. **Memory card**
2. **Screen**
3. **Return key**
4. **Up key**
5. **Down key**
6. **Validate key**
7. **Help key**

The memory card (1) contains all the information necessary to allow the technician to follow a number of different paths to:

- Diagnose faults
- Obtain data
- Make checks / adjustments

It is removeable to allow replacement / update cards to be inserted.

The screen comprises four horizontal lines and twenty vertical columns forming a series of boxes into which letters and numbers can be displayed to provide the necessary question, message, answer etc.

At the left of the screen, one or more symbols as detailed below may be displayed.

DIAGNOSTICS
CURRENT DATA
► READ STORED DTCS
▼ FUNCTION TESTS

Typical screen showing symbol examples

▲▼ Cursors to indicate that further lines of text are available to be seen above and/or below those already in view, by scrolling the text up or down using the 'Up' or 'Down' keys.

► Cursor to show which line of text is 'Active'.

? Indicates further help/guidance information available that line by pressing the help key.

Tool Keys

In most cases, the **Return** key (↵) enables the user to return to the screen last displayed.

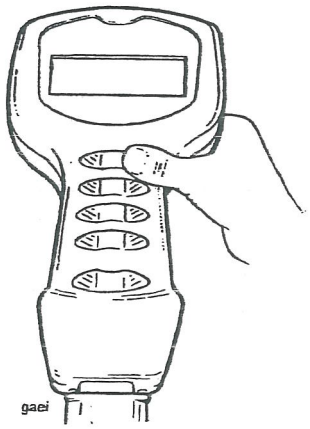

Return key

The **Up** and **Down** keys – press to move the lines of text up or down. They are also used to enter the Dealer number and the date.

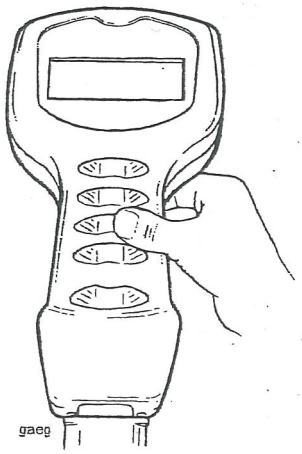

Up/down keys (2 separate keys)

Press the **Validation** key (✳) to move on to the next message.

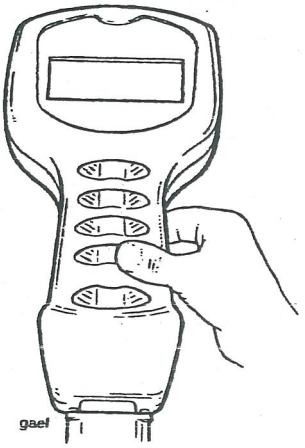

Validation key

The **Help** key can be used when the '?' symbol shows, to get more information about that line of text. To return to the diagnostic screen from the help area, press the help '?' button again.

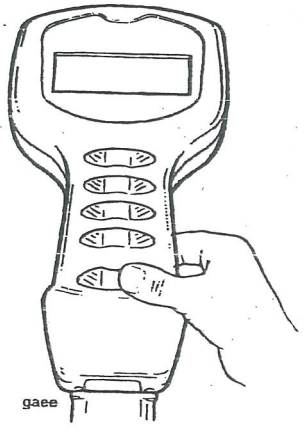

Help key

TEST PROCEDURE

The following describes the procedure to follow when using the service diagnostic tool. It does not cover the further diagnosis that must be carried out once a fault area has been identified. For details of the procedure to follow when a fault area or fault code has been identified, refer to the diagnosis details later in this section.

NOTE:

- **The tool does not retain any memory of faults, diagnosis etc. carried out on any particular motorcycle. Any such memory is only retained in the motorcycle's ECM.**
- **The following five pages describe the tool operations in flow chart form.**

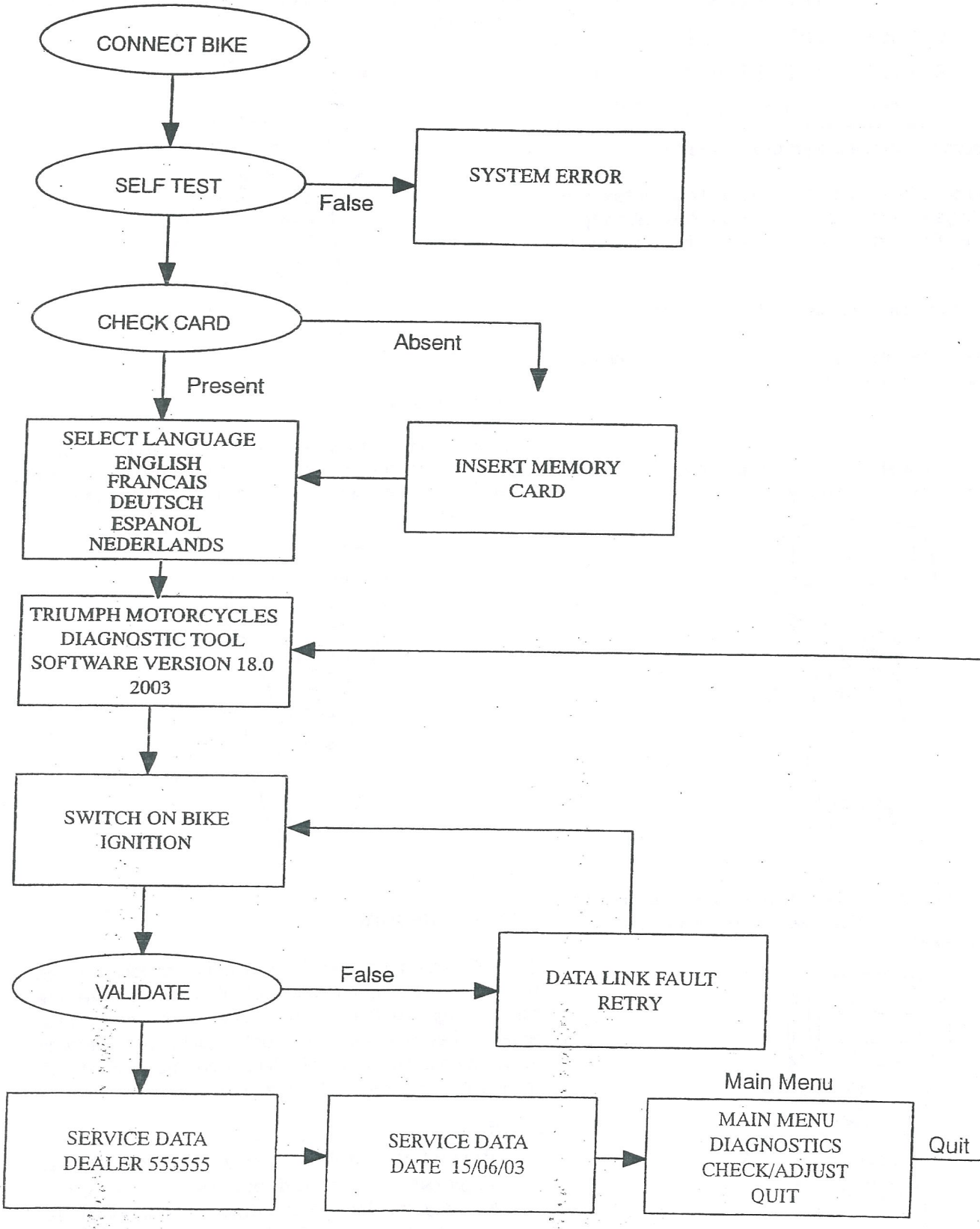
CONNECT BIKE
SELF TEST
False
SYSTEM ERROR
CHECK CARD
Absent
Present
SELECT LANGUAGE
ENGLISH
FRANCAIS
DEUTSCH
ESPANOL
NEDERLANDS
INSERT MEMORY CARD
TRIUMPH MOTORCYCLES
DIAGNOSTIC TOOL
SOFTWARE VERSION 18.0
2003
SWITCH ON BIKE IGNITION
VALIDATE
False
DATA LINK FAULT
RETRY
Main Menu
SERVICE DATA
DEALER 555555
SERVICE DATA
DATE 15/06/03
MAIN MENU
DIAGNOSTICS
CHECK/ADJUST
QUIT
Quit

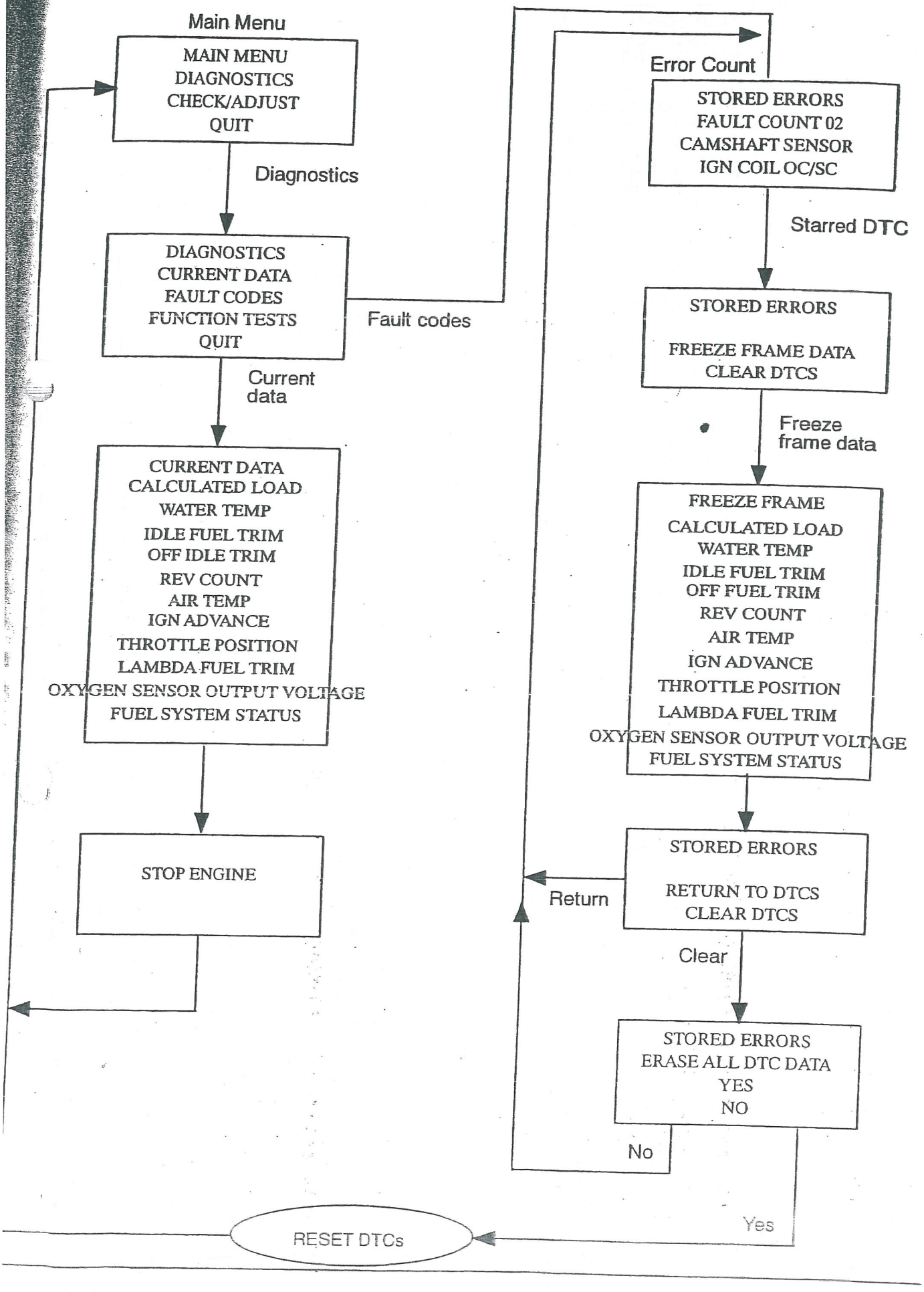
Main Menu
MAIN MENU
DIAGNOSTICS
CHECK/ADJUST
QUIT
Diagnostics
DIAGNOSTICS
CURRENT DATA
FAULT CODES
FUNCTION TESTS
QUIT
Fault codes
Current data
CURRENT DATA
CALCULATED LOAD
WATER TEMP
IDLE FUEL TRIM
OFF IDLE TRIM
REV COUNT
AIR TEMP
IGN ADVANCE
THROTTLE POSITION
LAMBDA FUEL TRIM
OXYGEN SENSOR OUTPUT VOLTAGE
FUEL SYSTEM STATUS
STOP ENGINE
Error Count
STORED ERRORS
FAULT COUNT 02
CAMSHAFT SENSOR
IGN COIL OC/SC
Starred DTC
STORED ERRORS
FREEZE FRAME DATA
CLEAR DTCS
Freeze frame data
FREEZE FRAME
CALCULATED LOAD
WATER TEMP
IDLE FUEL TRIM
OFF FUEL TRIM
REV COUNT
AIR TEMP
IGN ADVANCE
THROTTLE POSITION
LAMBDA FUEL TRIM
OXYGEN SENSOR OUTPUT VOLTAGE
FUEL SYSTEM STATUS
STORED ERRORS
RETURN TO DTCS
CLEAR DTCS
Return
Clear
STORED ERRORS
ERASE ALL DTC DATA
YES
NO
No
Yes
RESET DTCs

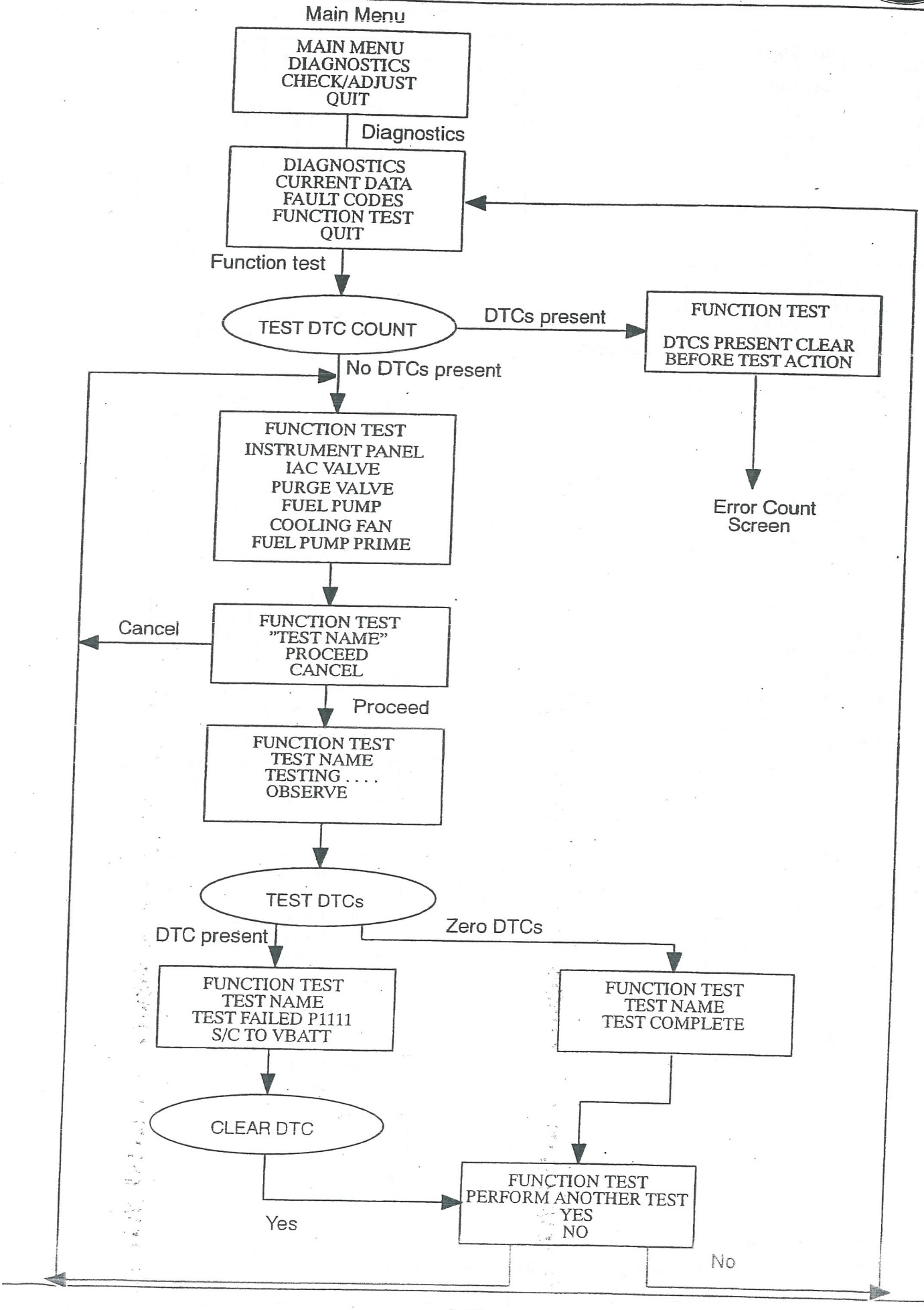
Main Menu
MAIN MENU
DIAGNOSTICS
CHECK/ADJUST
QUIT
Diagnostics
DIAGNOSTICS
CURRENT DATA
FAULT CODES
FUNCTION TEST
QUIT
Function test
TEST DTC COUNT
DTCs present
FUNCTION TEST
DTCS PRESENT CLEAR
BEFORE TEST ACTION
Error Count
Screen
No DTCs present
FUNCTION TEST
INSTRUMENT PANEL
IAC VALVE
PURGE VALVE
FUEL PUMP
COOLING FAN
FUEL PUMP PRIME
Cancel
FUNCTION TEST
"TEST NAME"
PROCEED
CANCEL
Proceed
FUNCTION TEST
TEST NAME
TESTING . . . .
OBSERVE
TEST DTCs
DTC present
Zero DTCs
FUNCTION TEST
TEST NAME
TEST FAILED P1111
S/C TO VBATT
FUNCTION TEST
TEST NAME
TEST COMPLETE
CLEAR DTC
Yes
FUNCTION TEST
PERFORM ANOTHER TEST
YES
NO
No

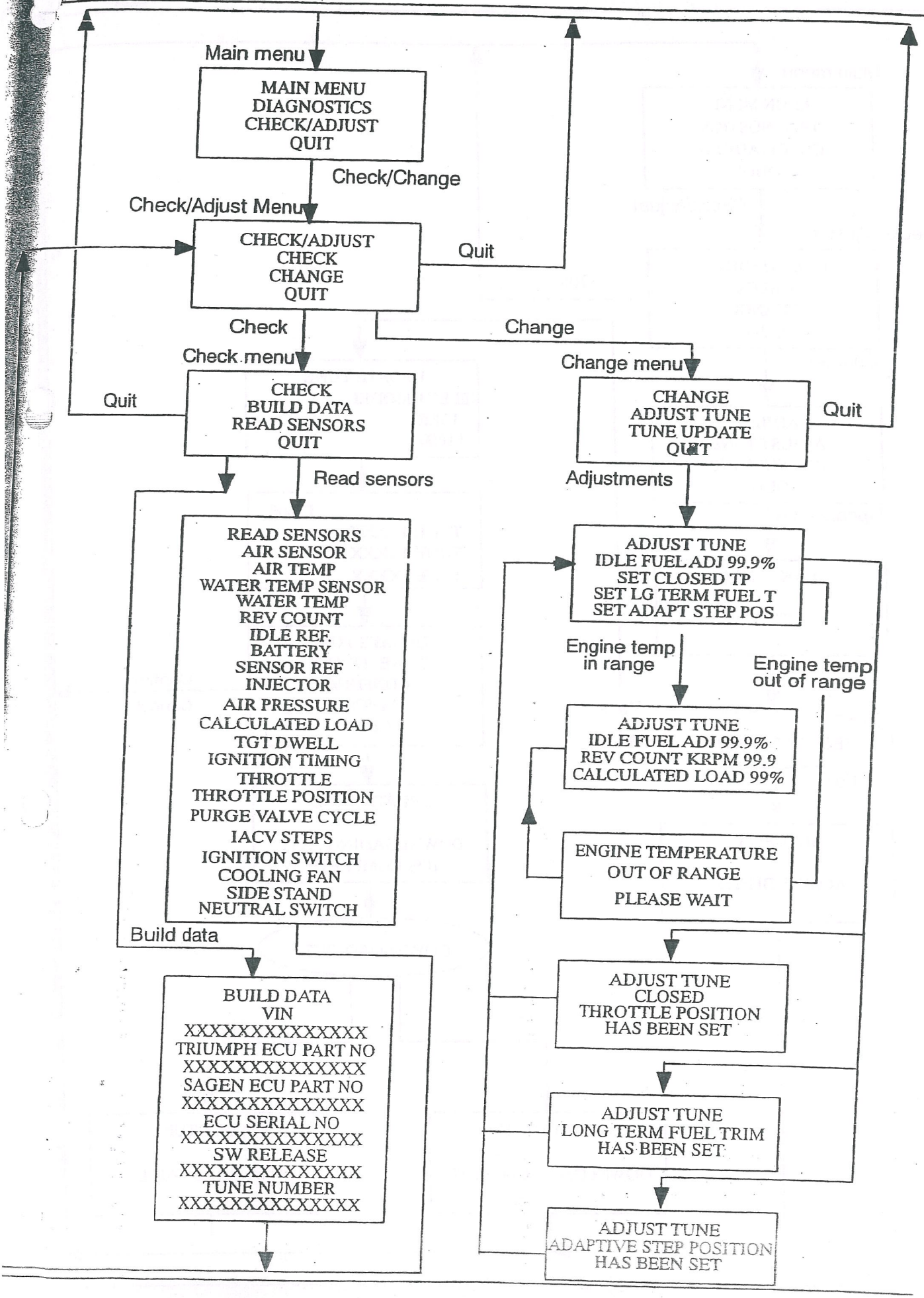
Main menu
MAIN MENU
DIAGNOSTICS
CHECK/ADJUST
QUIT
Check/Change
Check/Adjust Menu
CHECK/ADJUST
CHECK
CHANGE
QUIT
Quit
Check
Change
Check menu
Change menu
Quit
CHECK
BUILD DATA
READ SENSORS
QUIT
CHANGE
ADJUST TUNE
TUNE UPDATE
QUIT
Quit
Read sensors
Adjustments
READ SENSORS
AIR SENSOR
AIR TEMP
WATER TEMP SENSOR
WATER TEMP
REV COUNT
IDLE REF.
BATTERY
SENSOR REF
INJECTOR
AIR PRESSURE
CALCULATED LOAD
TGT DWELL
IGNITION TIMING
THROTTLE
THROTTLE POSITION
PURGE VALVE CYCLE
IACV STEPS
IGNITION SWITCH
COOLING FAN
SIDE STAND
NEUTRAL SWITCH
ADJUST TUNE
IDLE FUEL ADJ 99.9%
SET CLOSED TP
SET LG TERM FUEL T
SET ADAPT STEP POS
Engine temp
in range
Engine temp
out of range
ADJUST TUNE
IDLE FUEL ADJ 99.9%
REV COUNT KRPM 99.9
CALCULATED LOAD 99%
ENGINE TEMPERATURE
OUT OF RANGE
PLEASE WAIT
Build data
BUILD DATA
VIN
XXXXXXXXXXXXXX
TRIUMPH ECU PART NO
XXXXXXXXXXXXXX
SAGEN ECU PART NO
XXXXXXXXXXXXXX
ECU SERIAL NO
XXXXXXXXXXXXXX
SW RELEASE
XXXXXXXXXXXXXX
TUNE NUMBER
XXXXXXXXXXXXXX
ADJUST TUNE
CLOSED
THROTTLE POSITION
HAS BEEN SET
ADJUST TUNE
LONG TERM FUEL TRIM
HAS BEEN SET
ADJUST TUNE
ADAPTIVE STEP POSITION
HAS BEEN SET

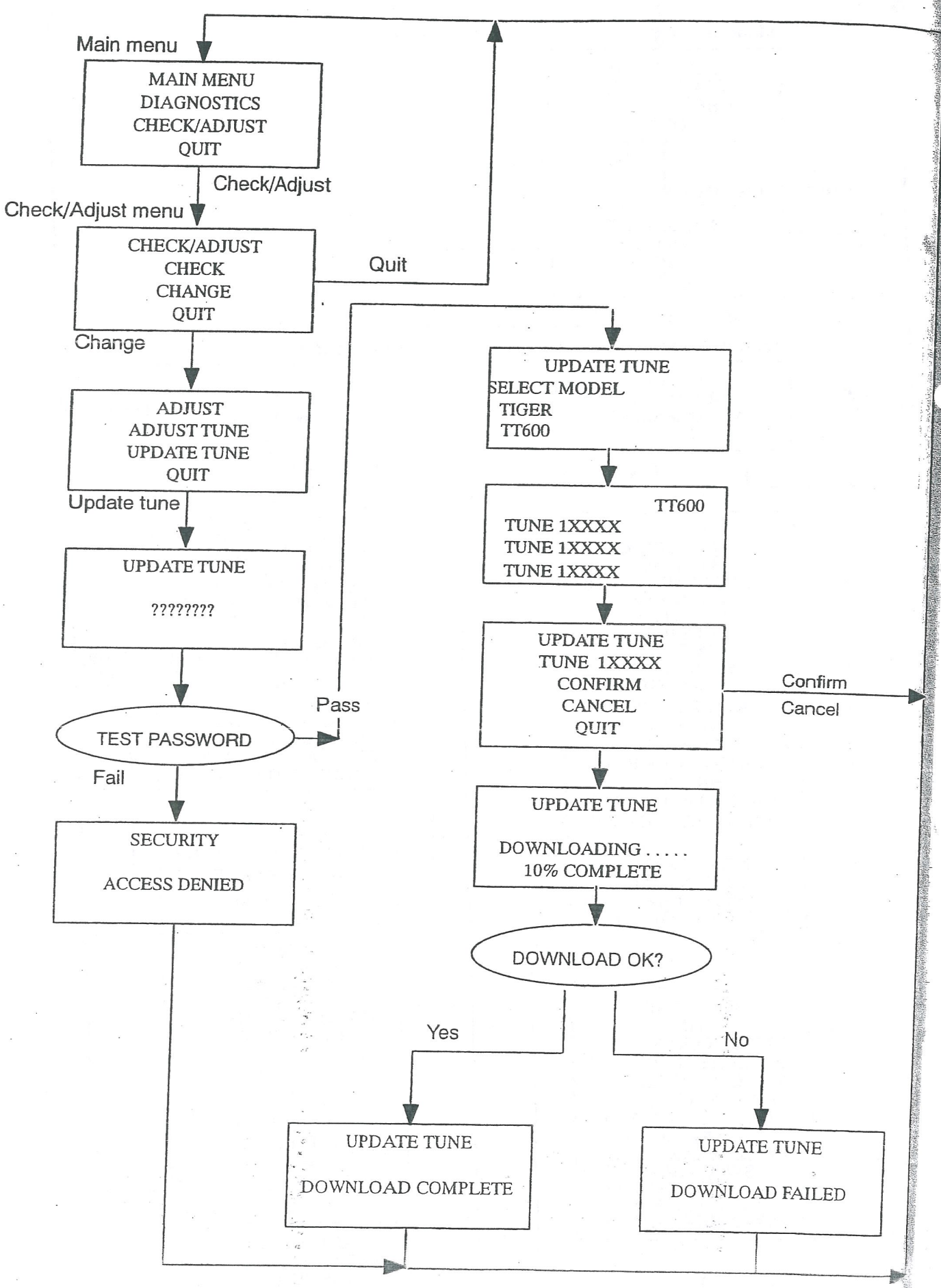
Main menu
MAIN MENU
DIAGNOSTICS
CHECK/ADJUST
QUIT
Check/Adjust
Check/Adjust menu
CHECK/ADJUST
CHECK
CHANGE
QUIT
Quit
Change
ADJUST
ADJUST TUNE
UPDATE TUNE
QUIT
Update tune
UPDATE TUNE
????????
TEST PASSWORD
Pass
Fail
SECURITY
ACCESS DENIED
UPDATE TUNE
SELECT MODEL
TIGER
TT600
TT600
TUNE 1XXXX
TUNE 1XXXX
TUNE 1XXXX
UPDATE TUNE
TUNE 1XXXX
CONFIRM
CANCEL
QUIT
Confirm
Cancel
UPDATE TUNE
DOWNLOADING . . . . .
10% COMPLETE
DOWNLOAD OK?
Yes
No
UPDATE TUNE
DOWNLOAD COMPLETE
UPDATE TUNE
DOWNLOAD FAILED

1. CONNECTION AND POWER-UP

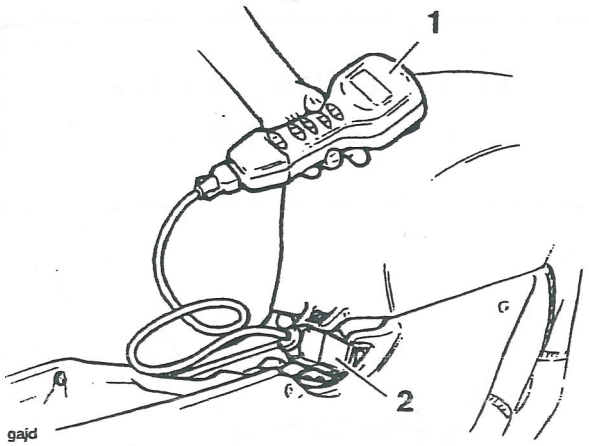

Tool

2. Connection to Main Harness

Connect the tool to the dedicated multiplug under the seat.

A message appears on the screen and certain checks are made automatically, e.g. Is the memory card fitted ?

'SELECT LANGUAGE' will then be displayed.

2. SELECT LANGUAGE



Use the 'Up' and 'Down' keys to move the cursor in column 1 and select the language required.

NOTE:

- **The tool will always select English as the default language, and it is only necessary to use the cursor to select one of the other languages. The entire diagnostic session will then continue in the chosen language.**

Press the validation key '✳' to move on.

3. TRIUMPH MOTORCYCLES

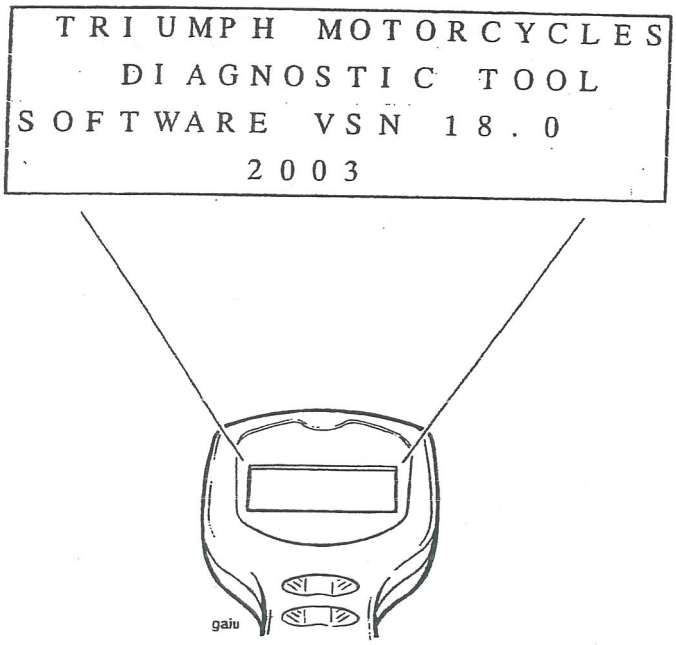

The screen will display the message 'Triumph Motorcycles Diagnostic Tool' and will also give the diagnostic software version and the software release year.

Press the validation key '*' to move on.

If the Return key (↵) is pressed, the tool will return to the **'SELECT LANGUAGE'** display.

4. SWITCH ON BIKE IGNITION

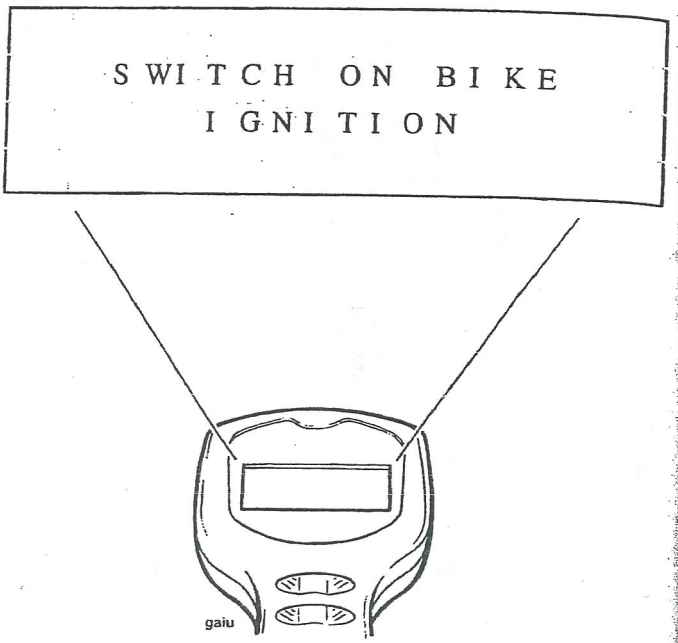

Switch on the ignition. Do NOT start the engine.

Press the validation key '*'. During a short delay period the tool will carry out certain validation checks.

If it detects a problem which will invalidate the test, **'DATA LINK FAULT RETRY?'** will be displayed.

If all is OK, **'SERVICE DATA'** will appear on the screen.

DATA LINK FAULT RETRY?

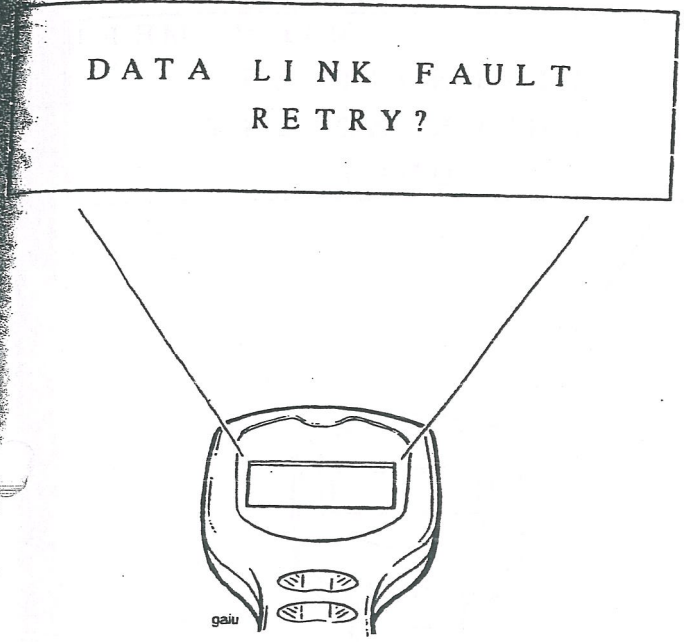

If the above is displayed, check that the ignition is switched on.

If the ignition is already on, the problem may be caused by bad connections, faulty ignition switch, cable break, faulty ECM, flat battery etc.

Press the **Help** key '**?**' for advice.

Rectify the problem and press the Validation key '*' to return to **'SWITCH ON BIKE IGNITION'**.

Press the Validation key '*' again. If the tool accepts that the problem has been rectified, **'SERVICE DATA'** will be displayed.

This is the first of 2 screens for which the operator has to input information, without which the testing cannot proceed further.

6. SERVICE DATA – DEALER

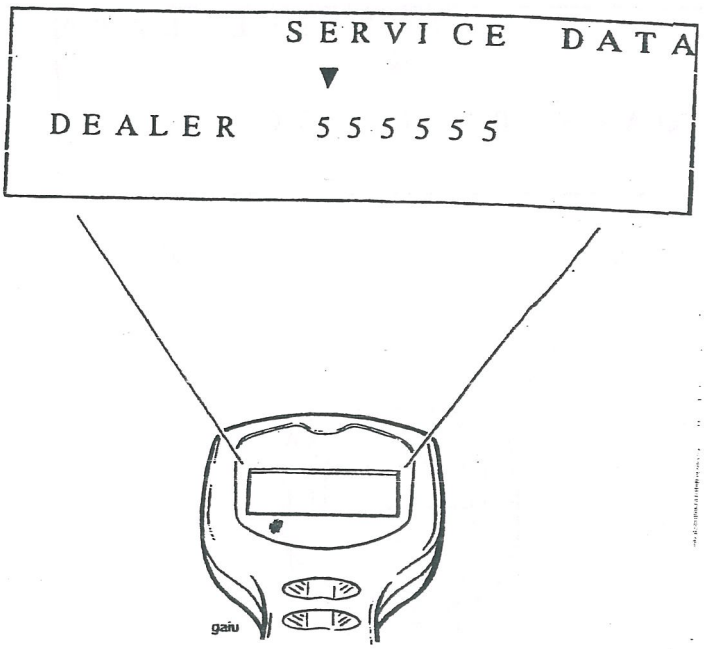

Enter your Dealer number as follows:

The number **'555555'** is displayed, with the cursor pointing down at the first digit.

Press the 'Up' or 'Down' keys to change this digit to the first digit of your dealer code.

Press the Validation key '*'.

The cursor will now re-position over the second digit '5'. Enter the 2nd digit of your Dealer number in the same way.

Continue until all 5 digits of your dealer code have been entered.

NOTE:

- **If any digit has been entered incorrectly, press the 'Return' key (↵) to start again.**

When all 5 digits have been entered correctly, press the Validation key '*'.

You must enter a valid Dealer Number to continue. If you do not know your dealer number, contact Triumph or your importer for advice.

7. SERVICE DATA – DATE

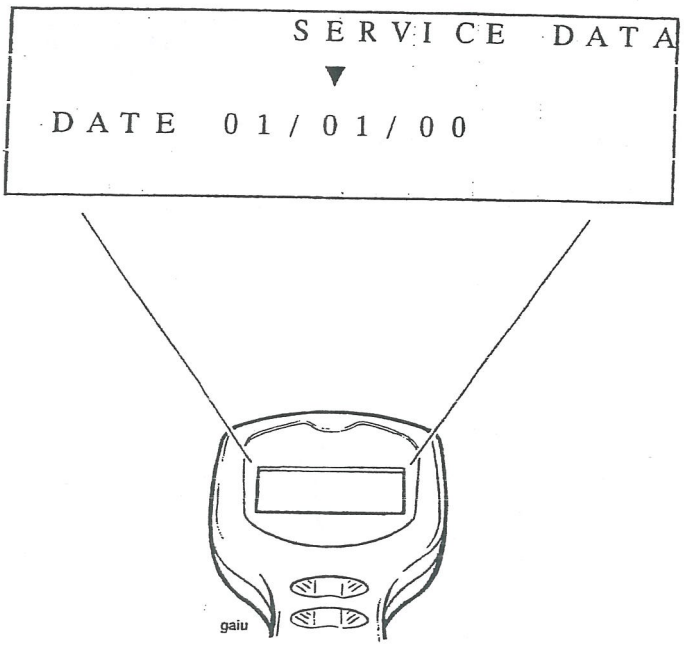

Enter the date using the 'Up' and 'Down' keys in the same way that the Dealer number was entered.

NOTE:

- **6 digits must always be entered, e.g. if it is the 7th month this must be entered as 07.**
- **The date must be entered in the order Day/Month / Year.**

When complete, press the Validation key '*' to display – **'MAIN MENU'**.

8. MAIN MENU

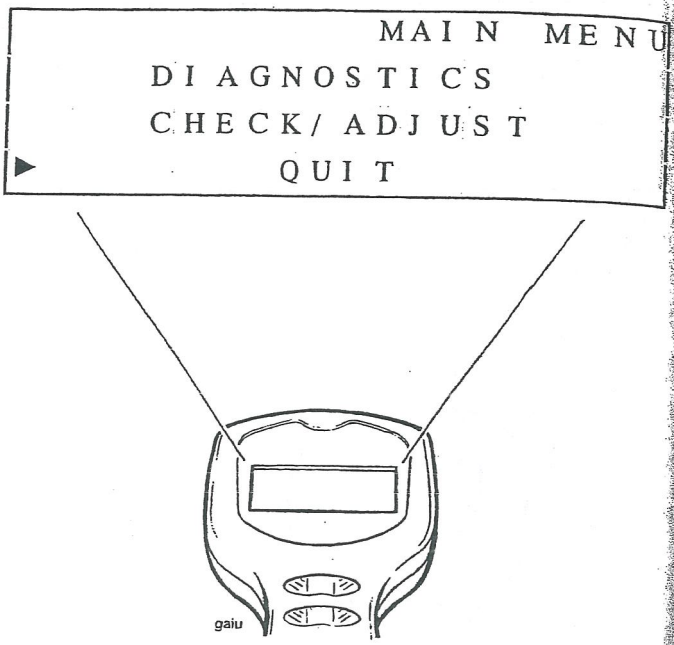

When this screen is displayed, you have to decide whether to proceed along one of two routes:

- **'DIAGNOSTICS'**
- **'CHECK/ADJUST'**

The **'DIAGNOSTICS'** menu provides access to:

Current data e.g. actual engine temperature, engine speed etc.

Diagnostic Trouble Codes (DTC's) i.e. access to codes stored in the motor cycle ECM which indicate a confirmed fault(s) in the system.

Function tests e.g. of tachometer, water temperature gauge, fuel pump etc.

The **'CHECK/ADJUST'** menu provides:

Checks i.e. build information, system data.

Adjustments e.g. adjustment of idle fuel/CO etc., and entry of software updates.

Use the 'Up and Down' keys to position the cursor opposite the desired choice, and press the Validation key '*'.

Either **'DIAGNOSTICS'** (operation 9) or **'CHECK/ADJUST'** (operation 27) will be displayed, dependent on the selection.

NOTE:

- **If 'QUIT' is selected and the validation key '*' pressed, the display will return to 'TRIUMPH MOTORCYCLES'.**

9. DIAGNOSTICS *(If 'DIAGNOSTICS' is selected)*

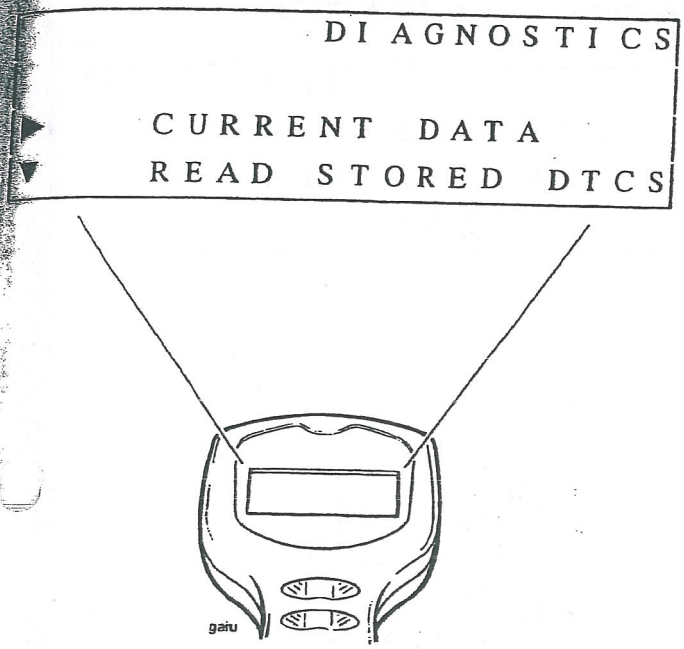

This display is the **'DIAGNOSTICS'** menu.

Use the 'Up' and 'Down' keys to scroll the text until the horizontal arrowhead is positioned opposite the desired choice, and press the Validation key '*'.

The choices are:

- **'CURRENT DATA'** (see operation 10)
- **'READ STORED DTCS'** (see operation 12)
- **'FUNCTION TESTS'** (see operation 18)
- If **'QUIT'** is selected, the display will return to **'TRIUMPH MOTORCYCLES'**.

10. CURRENT DATA

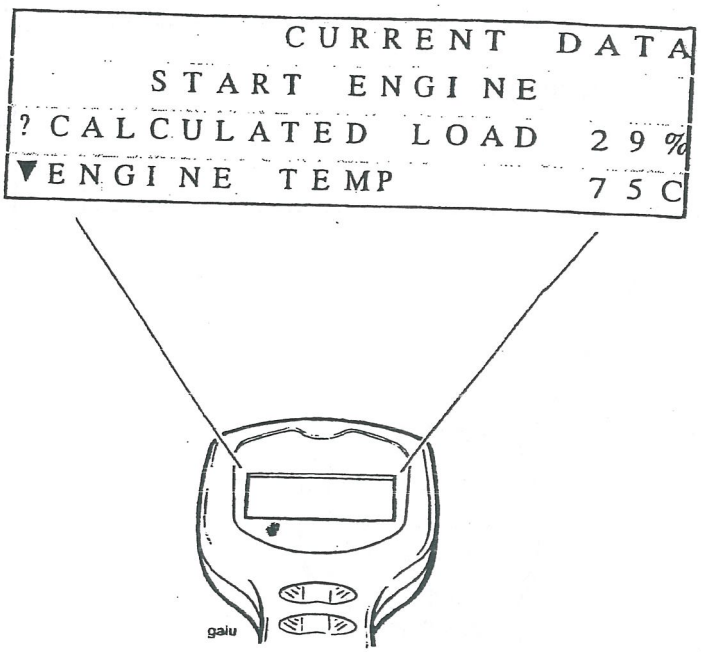

Start the engine. **'CURRENT DATA'** includes the information shown in the table below which can be accessed by scrolling, using the 'Up' and 'Down' keys. At the end of each line of text, the actual reading at that instant is provided to assist diagnosis e.g. **ENGINE TEMP 95C.**

CURRENT DATA AVAILABLE	
Function Examined	**Result Reported (Scale)**
Faults stored (quantity)	1-127
Calculated load	0-100%
Coolant temperature	-40- +215°C
Idle fuel trim	-100 - + 99.2%
Off idle fuel trim	Not used
Engine speed	0 - 16,383 RPM
Air temperature	-40 - +215°C
Ignition Advance	-64° - +63.5°
Throttle Position	0-100%

If further clarification of any line of displayed text is required, scroll that line opposite the **'?'** symbol in the left hand column and press the **Help** key (**?**). Limited information on the selected topic will then be displayed.

Press any key to return to the **'CURRENT DATA'** text. When all information has been noted, press either the Validation '*' or Return (↵) keys.

11. STOP ENGINE

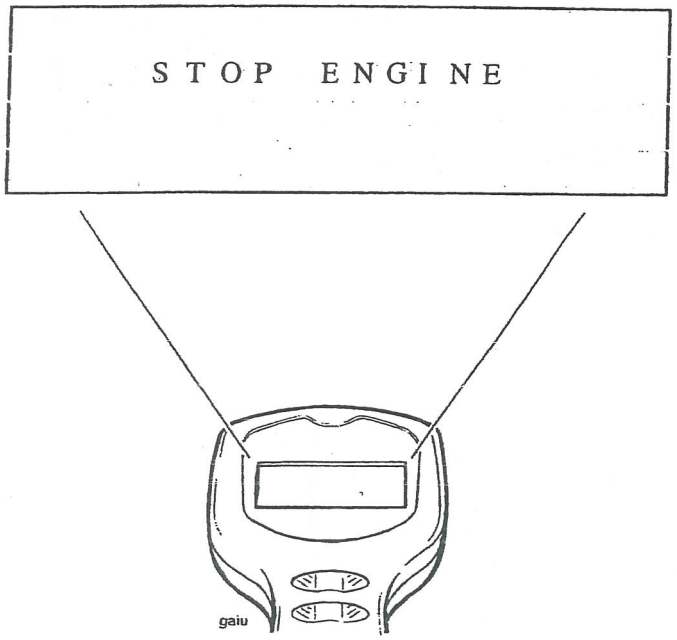

Switch off the engine.

As the tool is powered from the motorcycle, this will end the diagnostic session. To continue, return to the power-up section and select tests as required.

12. To select 'READ STORED DTCS' (Diagnostic Trouble Codes) from the MAIN MENU:–

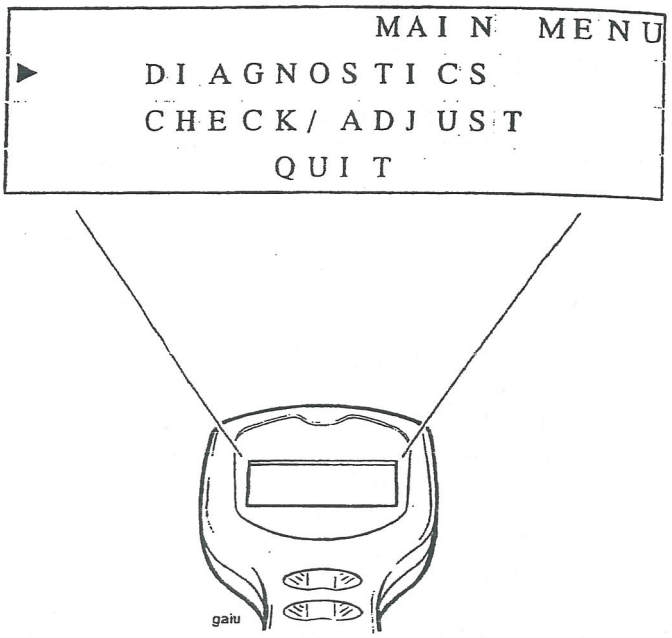

Use the 'Up' and 'Down' keys to position the cursor opposite **DIAGNOSTICS**.

Press the Validation key '✳' to display **'DIAGNOSTICS'** menu.

Select **'READ STORED DTCS'**, and press the Validation key '✳'.

'STORED DTCS' will be displayed.

13. STORED DTCS

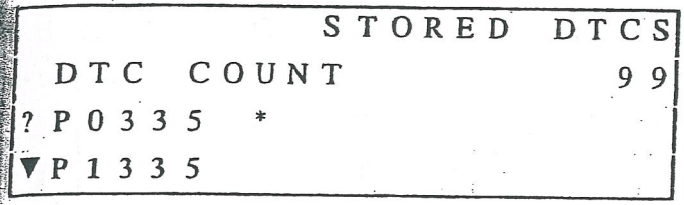

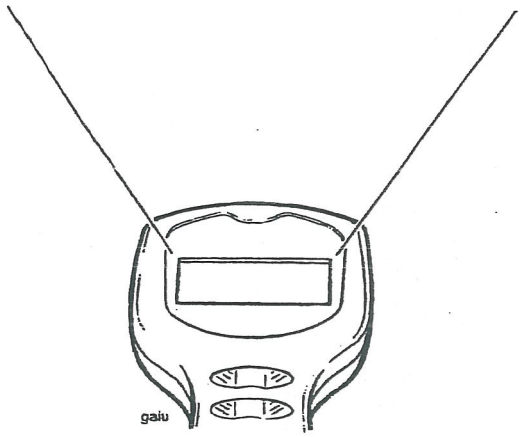

The second line – **'DTC COUNT'**, shows the number of DTC's stored in the ECM memory.

Lines 3 and 4 display up to two of the DTC'S stored (if any). If additional DTC'S are stored, this will be indicated by a downward pointing arrowhead, and it/they can be accessed using the 'Up' and 'Down' keys.

If there are no DTC's shown, press the Return key (↵) to return to **MAIN MENU**.

(If DTC's are present when the Return key is pressed, d' lay will read **'STORED DTCS, ERASE ALL DTC L TA YES/NO'.**)

Information about each DTC can be obtained by scrolling the text until the appropriate code is opposite the **'?'** in line 3; then press the **Help** key **(?)**.

DTC example: P0335

Help text CRANKSHAFT SENSOR CIRCUIT MALFUNCTION

Press the Validation key '*' to continue (operation 14).

IMPORTANT:

If a DTC has an asterisk (*) to its right, this indicates that a snap shot of engine data at the time the DTC was stored is available to aid your fault diagnosis. To access this inf nation, press the Validation key '*' to go to o ation 14 and open **'FREEZE FRAME DATA'**.

14. Three options are now available:–

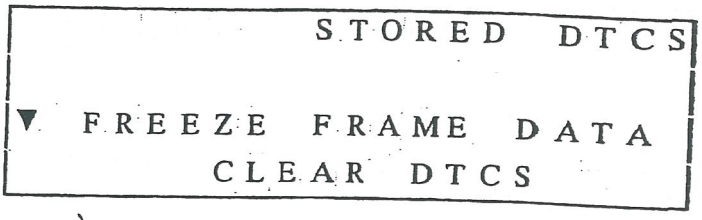

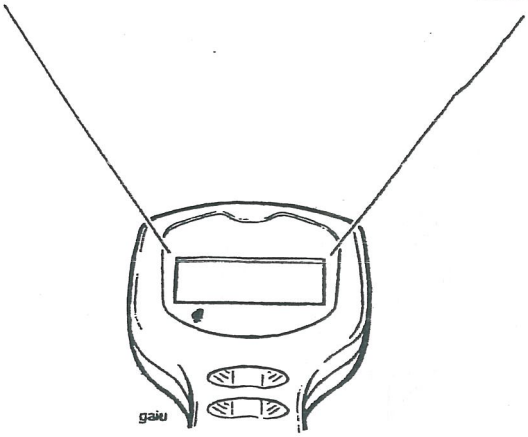

Align **'FREEZE FRAME DATA'** with the cursor, and press the validation key '*' to display **'FREEZE FRAME'** (see 15).

Align **'CLEAR DTCS'** with the cursor, and press the validation key '*' to display **'ERASE ALL DTC DATA'** (see 17).

Press the Return key (↵) to go back to **'STORED DTCS'** (operation 13).

15. FREEZE FRAME

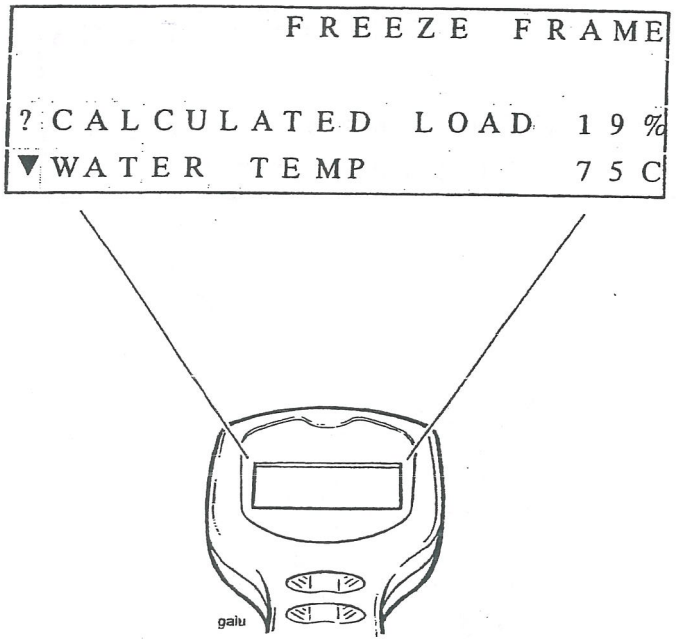

When a fault occurs which causes a DTC to be stored in the memory, the engine condition data at that instant is logged in the ECM. If another, more serious DTC is subsequently set, the original DTC data is automatically erased and new data associated with the latest DTC is logged in its place.

By selecting **'FREEZE FRAME'**, this information becomes available on the screen to aid diagnosis. Scroll the text up or down to view the data. More information can be gained by scrolling the text line in question to line 3 (**?**), then press the **Help** key (**?**) as before. Press the Validation key '*' to display **'STORED DTCS'** (operation 16).

FREEZE FRAME DATA AVAILABLE	
Function Memorised	**Result Reported (Scale)**
Calculated load	0-100%
Coolant temperature	-40- +215°C
Idle fuel trim	-100 - + 99.2%
Off idle fuel trim	Not used
Engine speed	0 - 16,383 RPM
Air temperature	-40 - +215°C
Ignition Advance	-64° - +63.5°
Throttle Position	0-100%
Barometric pressure	0 - 983 mm/Hg

16. STORED DTCS

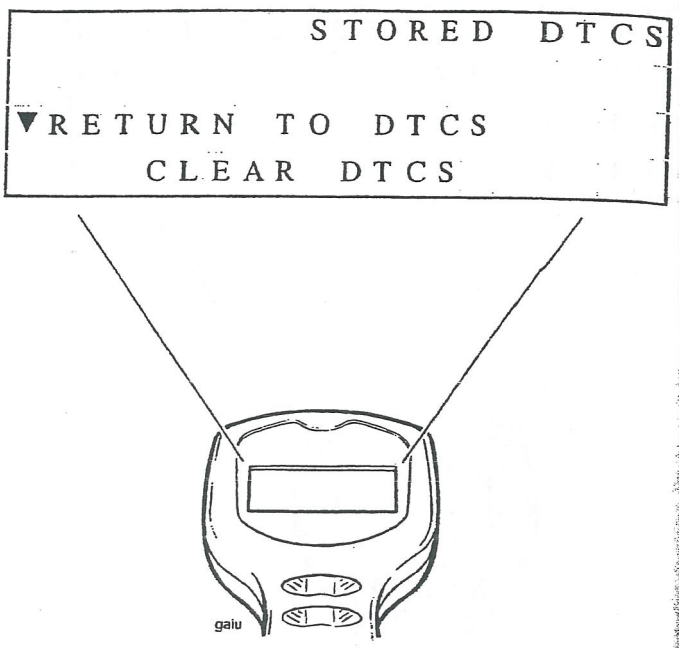

2 options are now available:

Scroll to **'RETURN TO DTCS'** and press the Validate key '*' to return to operation 13.

Scroll to **'CLEAR DTCS'** and press the Validation key '*' to go on to operation 17.

NOTE:

- **A full list of all the possible DTCs can be found earlier in this section.**

17. STORED DTCS, ERASE ALL DTC DATA

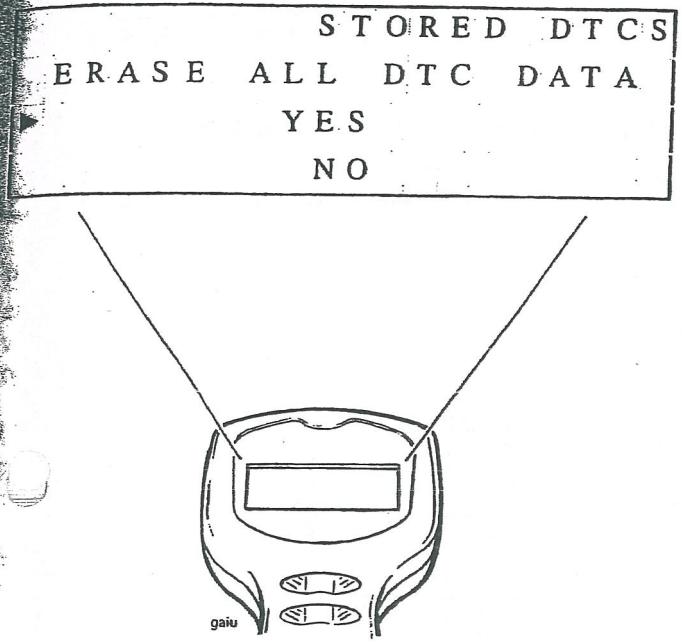

Scroll to position either **'YES'** or **'NO'** opposite the cursor.

If **'YES'** is selected, press the Validation key '*' to erase all DTC data from the memory. **'MAIN MENU'** will then be displayed.

NOTE:

- **If you intend to examine the Function Tests, entry will be inhibited unless the DTC's have been erased.**

If **'NO'** is selected, press the Validation key '*' to return to operation 13.

That completes the DTC cycle.

18. To select 'FUNCTION TESTS' from the MAIN MENU:

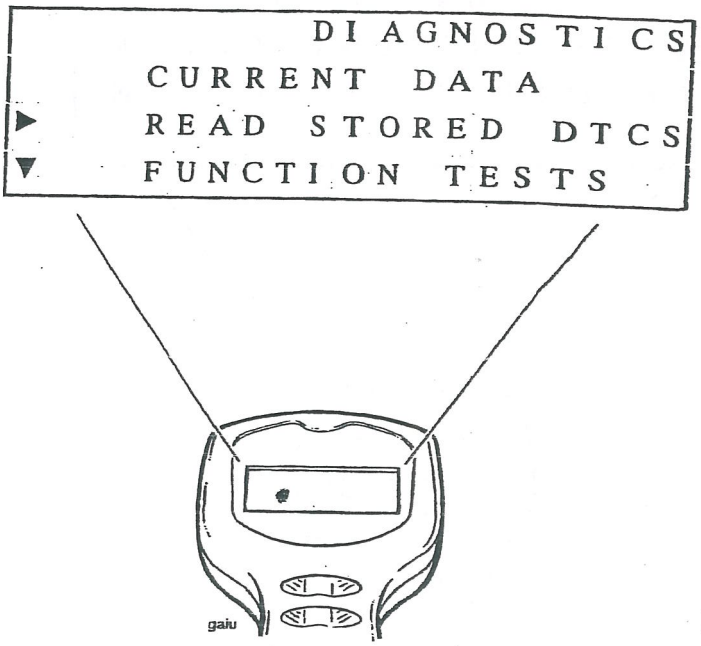

Use 'Up' and 'Down' keys to select **'DIAGNOSTICS'** menu.

The following choices are available.

Press the Validation key '*'. **'DIAGNOSTICS'** will be displayed.

Select **'FUNCTION TESTS'**, and press the Validation key '*'.

If no DTC'S are stored, **'FUNCTION TEST'** will be displayed (see operation 20).

If one or more DTC'S are stored, the message **'DTCS PRESENT CLEAR BEFORE TEST ACTION'** will be displayed (see operation 19).

NOTE:

- **The diagnostic tool will not allow Function Tests to be accessed until all DTC's in the memory are removed.**

19. FUNCTION TESTS

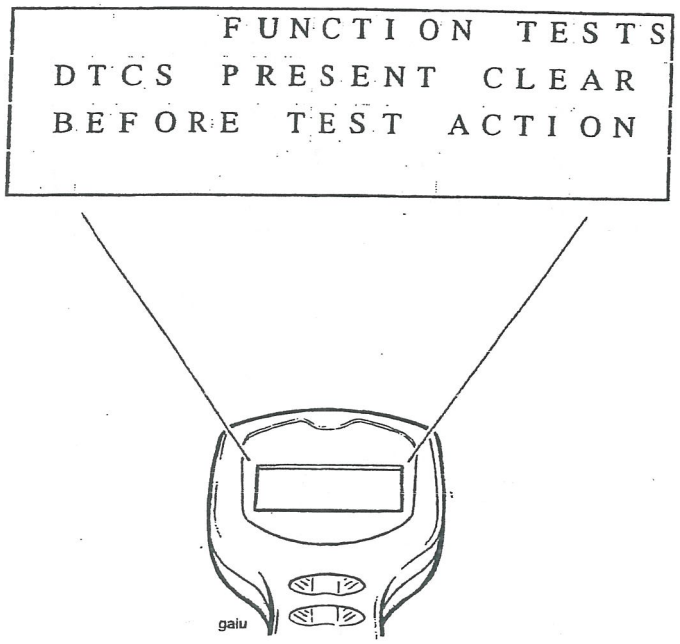

To clear the DTC's, press the Validation key '*'. **'STORED DTCS'** will be displayed (see operation 13).

Proceed as before via operations 14 to 17. Scroll to **'YES'** and press the Validation key '*' to erase all DTC data; the **MAIN MENU** will be displayed again.

NOTE:

- **The fault(s) which caused the DTC's to be set must be rectified and cleared before continuing the Function Tests.**
- **A full list of all the possible DTCs can be found earlier in this section.**

Select **'DIAGNOSTICS'** menu and **'FUNCTION TESTS'** again pressing the Validation key '*' each time.

Because the DTC's have now been erased, **'FUNCTION' TEST'** (operation 20) will now be displayed.

20. FUNCTION TEST

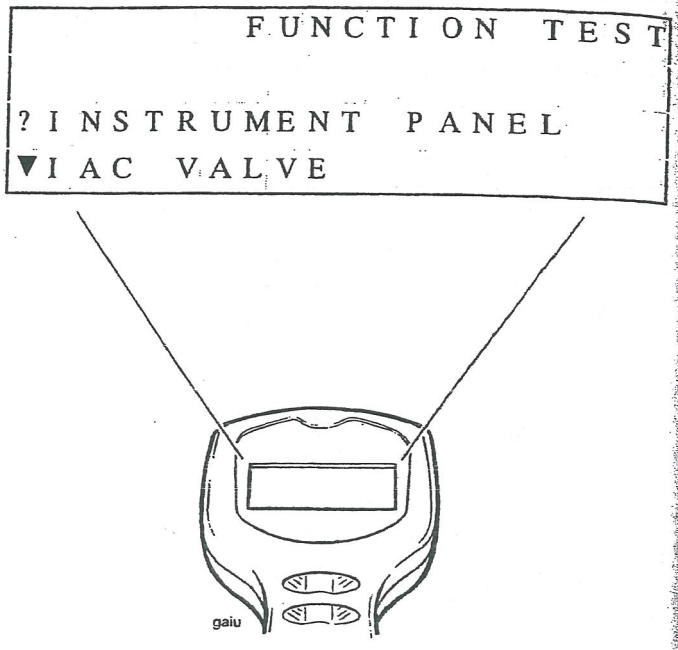

The following Function Tests can be made:

1 Instrument Panel
2 Idle air control valve (IACV) test
3 Purge valve test
4 Fuel pump test
5 Cooling fan test
6 Fuel pump priming test

If the fault is electrical, this will then be reported as a DTC.

Instrument Panel test: A signal is sent which should cause the tachometer to read approximately 4,000 RPM for 15 seconds, the water temperature gauge to show 100°C for 15 seconds and the fuel gauge (if fitted) to register 50% full (all simultaneously).

Idle air control valve (IACV) test: A signal is sent which should cause the valve to move through it's full range of step positions and then leave it in the park position. The signal will cause the valve to operate several times. To detect valve movement, use a stethoscope to listen for valve operation.

Fuel pump priming test: The fuel pump is run for a specific time to check for satisfactory priming. A message will then be displayed to that effect.

Fuel pump test: This test provides you with the means to physically check the pump operation.

Cooling fan test: A signal is sent which should cause the fan to operate for a 10 second period.

Purge valve test: (California models only) This test allows you to check operation of the valve. To detect valve movement, use a stethoscope to listen for valve operation.

Use the 'Up' and 'Down' keys to scroll the text lines, and position the function for which you wish to obtain information opposite the '?'.

By pressing the Validation key '*', your selection will be noted and **'FUNCTION TEST'** (operation 21) will be displayed.

Press the **Help** key (?) for more information.

NOTE:

- **If the Return key (↵) is pressed, the tool will return to 'DIAGNOSTICS' menu (operation 9).**

21. FUNCTION TEST

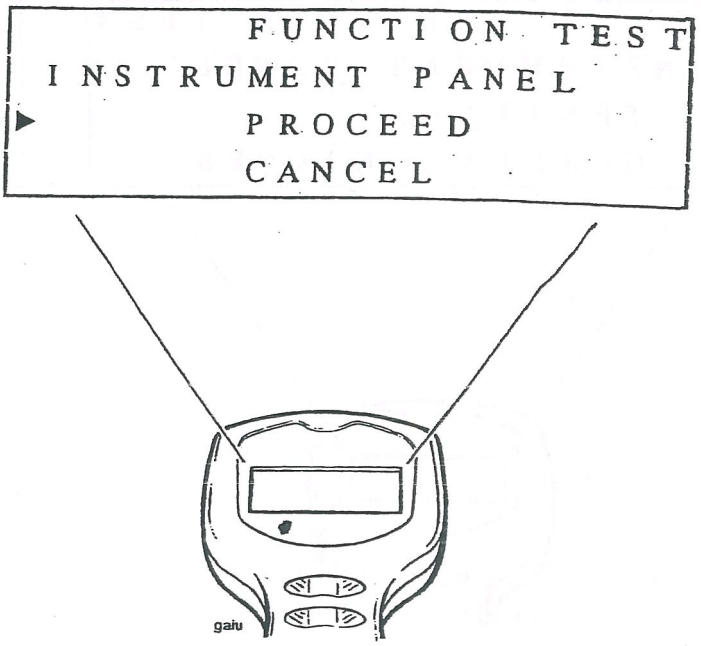

The function selected at operation 20 will now show on line 2. To show an example of this, we have chosen the **'INSTRUMENT PANEL'** test.

If you press the **Help** key (?). help relating to the specific test will be given. In this example, the screen will now read

TACHOMETER - (approx.') 4000 RPM
TEMP GAUGE - 100 °C
FUEL GAUGE - 50%

If you wish to cancel that selection, scroll to **'CANCEL'** and press the Validation key '*'. The display will return to operation 20.

If you wish to test the component selected, scroll to **'PROCEED'** and press the Validation key '*'.

22. FUNCTION TEST

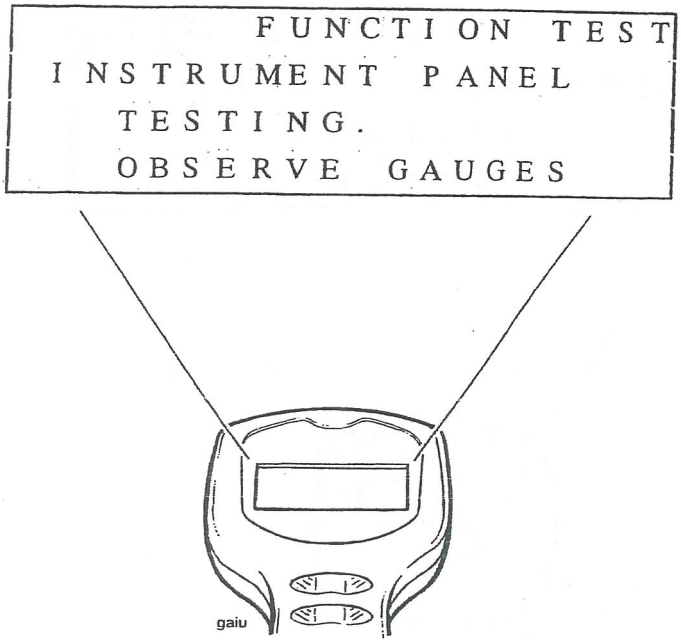

The screen now displayed will be specific to the component being tested:

In the example selected – **'INSTRUMENT PANEL'**, the instruction is to observe the gauges.

After a period of time, the screen will automatically change to either **'TEST COMPLETE'** (see operation 23) which will indicate a satisfactory completion, or to **'TEST FAILED'** (see operation 25) which will indicate failure.

23. FUNCTION TEST

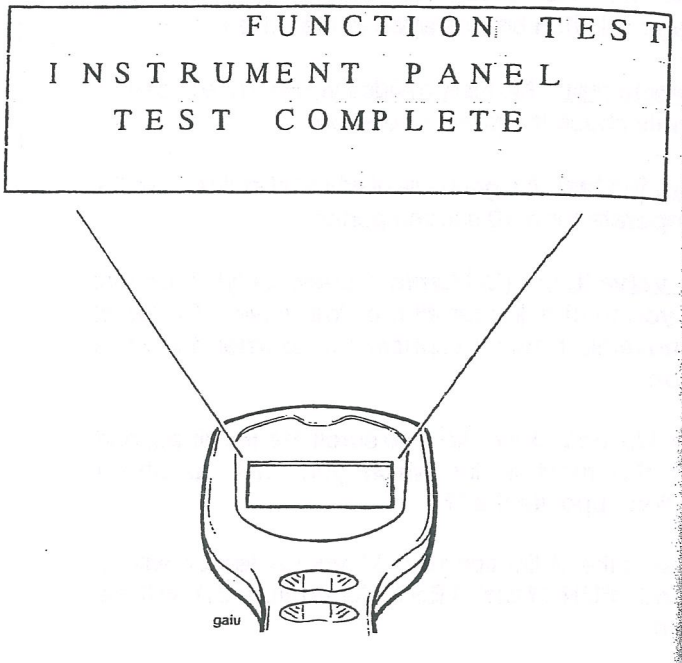

If the test is satisfactory the display will read **'TEST COMPLETE'**. Press the Validation key '*' to display **'FUNCTION TEST'** (operation 24).

24. FUNCTION TEST

```
          FUNCTION TEST
PERFORM ANOTHER TEST
▶           YES
            NO
```

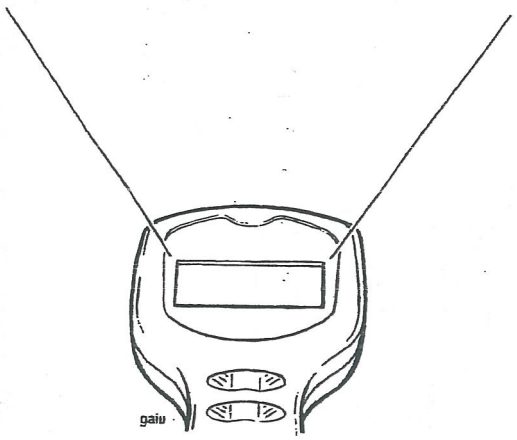

This display allows you to decide whether you wish to test another component.

Either – position the cursor on line 3 **'YES'** and press the Validation key '*' to return to the **'FUNCTION TEST'** selection menu,

or – position the cursor on line 4 **'NO'** and press the Validation key '*' to return to **'DIAGNOSTICS'** menu (operation 9).

25. FUNCTION TEST

```
          FUNCTION TEST
INSTRUMENT PANEL
TEST FAILED  P1117
```

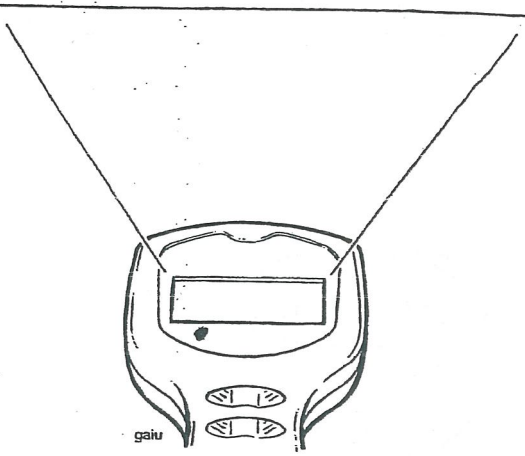

If the test at operation 22 is unsatisfactory, a DTC will be displayed on line 3 of this display (except fuel pump tests).

Press the Help key (**?**) to access the diagnosis information associated with that code.

Press the Validation key '*' if you wish to test another component (operation 24).

NOTE:

- **Any DTC's logged in the system will be automatically cleared at this point.**

To return to the **'DIAGNOSTICS'** menu, Select **'QUIT'** and press the Validation key '*' to return to the **'MAIN MENU'** (operation 8).

That completes the **FUNCTION TESTS** cycle.

26. To select 'CHECKS/ADJUSTMENTS' from the MAIN MENU (operation 8):–

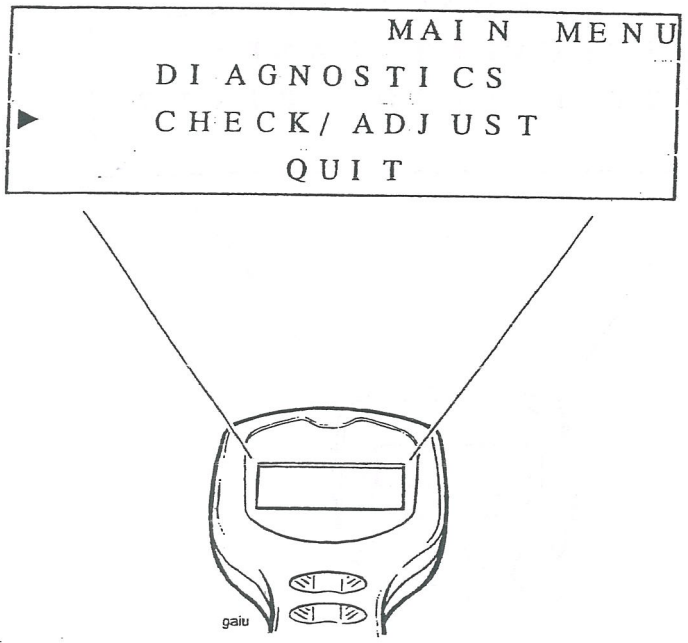

Use the 'Up' and 'Down' keys to position the cursor opposite **'CHECK/ADJUST'.**

Press the Validation key '✳'; the **'CHECK/ADJUST'** menu will be displayed.

27. CHECK/ADJUST

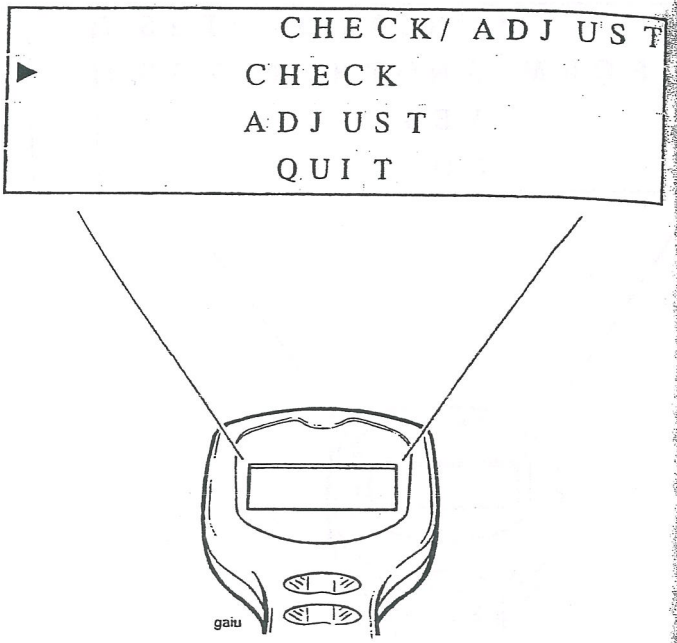

This is the Checks and Adjustments menu.

Use the 'Up' and 'Down' keys to position the cursor as follows, and then press the Validation key '✳':

Opposite **'CHECK'** – **'CHECKS'** will be displayed (operation 28).

Opposite **'ADJUST'** – **'ADJUST'** will be displayed (operation 32).

Opposite **'QUIT'** – to return to **'MAIN MENU'** (operation 8).

28. CHECKS

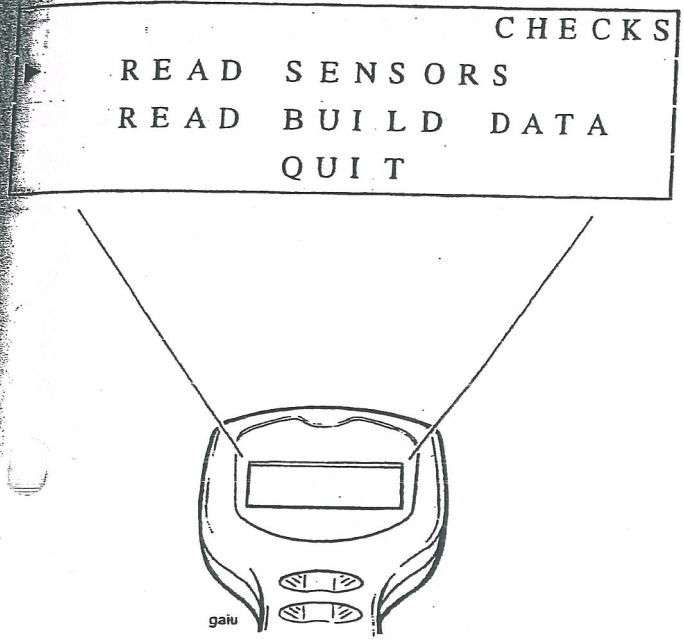

You now have the option to access the motorcycle **'BUILD DATA'** or the **'SYSTEM DATA'**, or to quit.

Position the cursor as follows and then press the Validation key '*':

Opposite **'READ SENSORS'** – **'SENSOR DATA'** (operation 30) will be displayed.

Opposite **'READ BUILD DATA'** – **'BUILD DATA'** (operation 29) will be displayed.

Opposite **'QUIT'** – to return to **'MAIN MENU'** (operation 8).

29. BUILD DATA

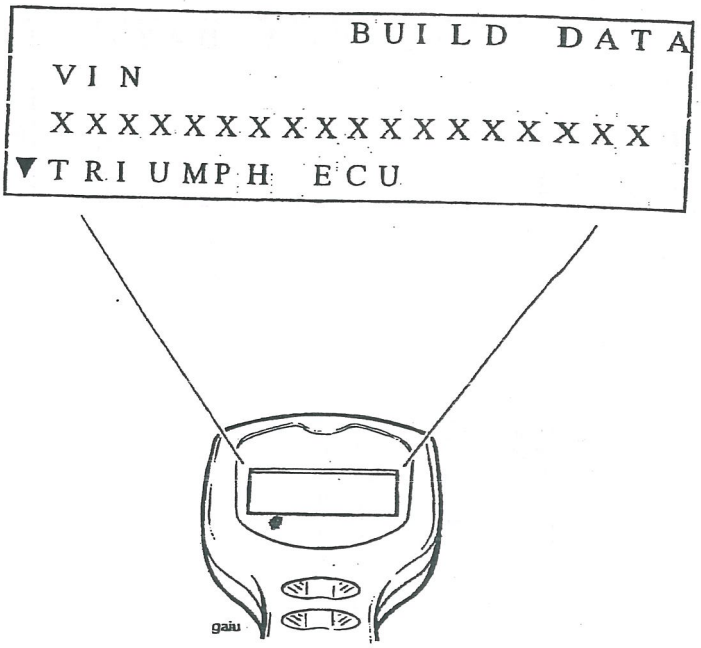

Providing the information was recorded at the time of build, the display will show the following information relating to the motorcycle under test by scrolling up and down. Before displaying the recorded information, the tool will briefly display the message, **'PLEASE WAIT, CHECKING BUILD DATA'**.

Vehicle Identification Number (VIN)
Triumph ECM part number
Supplier's ECM part number
ECM Serial number
Tune Number

Press the Validation '*' keys to return to **'CHECK/ADJUST'** menu (operation 27).

30. SENSOR DATA

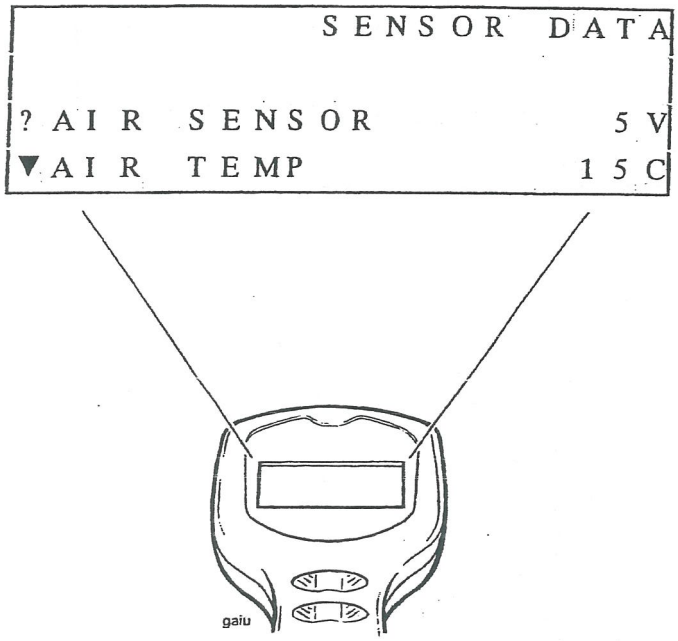

The display can be scrolled to show:

The status of the various sensors and actuators

To obtain further data information, scroll the appropriate line to the help key mark (**?**) and press the Help key.

NOTE:

- **The help information shows the likely range of readings for a correctly functioning system at normal operating temperature.**

That completes examination of the Checks.

Press the Validation key '*' to return to '**CHECK/ADJUST**' (operation 27).

31. To access the 'ADJUSTMENTS' menu.

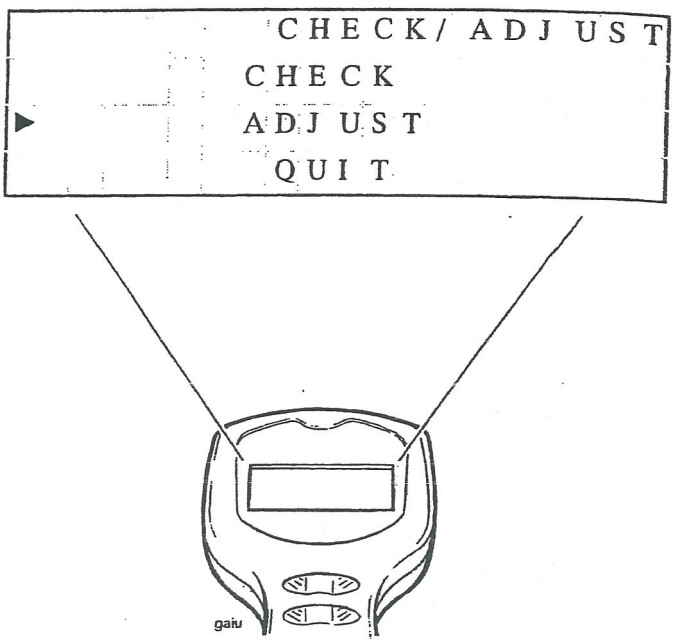

Use the 'Up' and 'Down' keys to position the cursor opposite '**ADJUST**'.

Press the Validation key '*'; '**ADJUST**' will be displayed.

Start the engine.

32. ADJUST

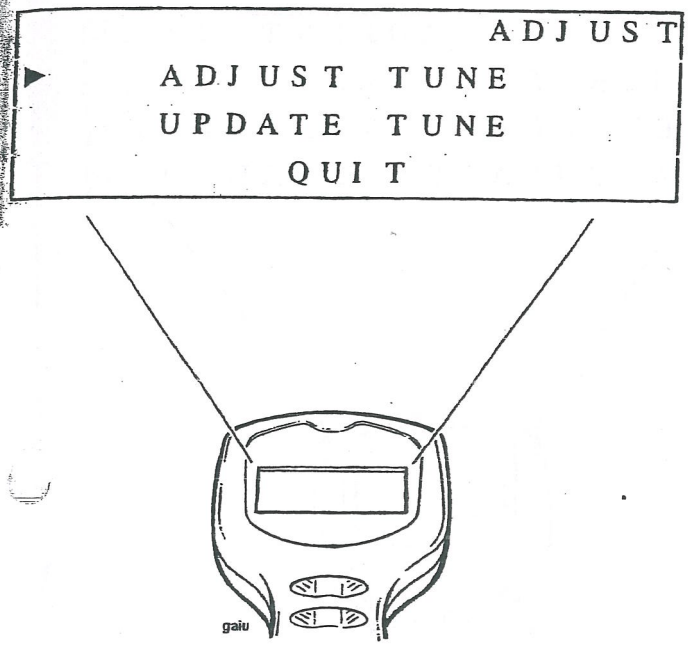

Position the cursor on line 2 **'ADJUST TUNE'** if you wish to check and/or adjust the values of certain tune items. Then press the Validation key '✳' to display **ADJUST TUNE** (see operation 33).

In special circumstances, Triumph will request you to introduce a completely new engine tune. Given this situation, select **'UPDATE TUNE'** and press the Validation key '✳' (see operation 36).

33. ADJUST TUNE

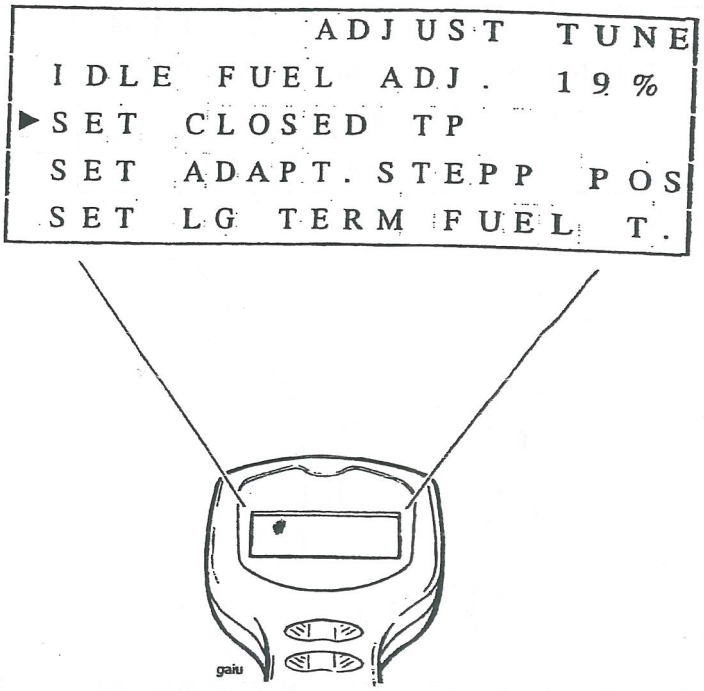

The following sequence shows status data and allows adjustments to be made to items which affect the engine operation

IDLE FUEL ADJ. (Idle fueling)
– See operation 34

The current setting for idle fueling is shown in the right hand column.

SET CLOSED TP (Closed throttle position)
– See operation 36

SET ADAPT STEPP POS (adaptive stepper position)
– See operation 37

Position the cursor opposite the setting you wish to adjust and press the Validation key '✳'.

34. ADJUST TUNE (Idle fuel adjustment)

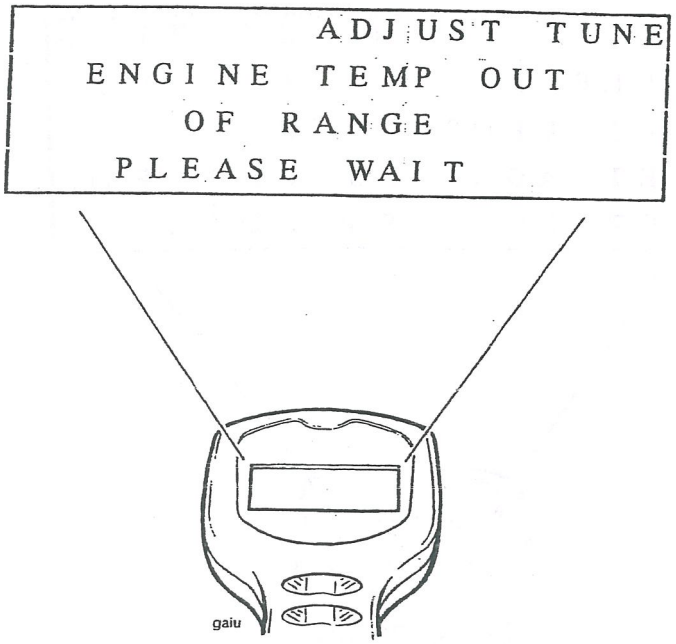

Because idle fueling adjustment must be made at normal operating temperature, the above screen may be displayed if the engine is either too cold (thermostat closed) or too hot (cooling fan operating). The current temperature is displayed while the engine warms/cools.

Until the engine warms or cools to the correct temperature range, the tool will not allow access to any other functions. If you wish to escape from this area (and not carry out the adjustment) switch off the ignition and disconnect the tool.

Once the correct temperature range has been reached, the **ADJUST TUNE** screen (operation 35) will automatically be displayed.

The Idle fueling (idle Co) can be adjusted when this display is showing, in fueling increments of 1% by pressing the 'Up' or 'Down' keys as appropriate.

The idle fuel adjustment read out will change accordingly, and the new values of engine speed and calculated load will be displayed.

CAUTION: Do not confuse the percentage reading on the tool with the carbon monoxide percentage reading as measured by an exhaust gas analyser. The tool reports idle fueling as a percentage of the maximum fueling range NOT AS A PERCENTAGE CO READING IN THE EXHAUST SYSTEM.

35. ADJUST TUNE (Idle fuel adjustment)

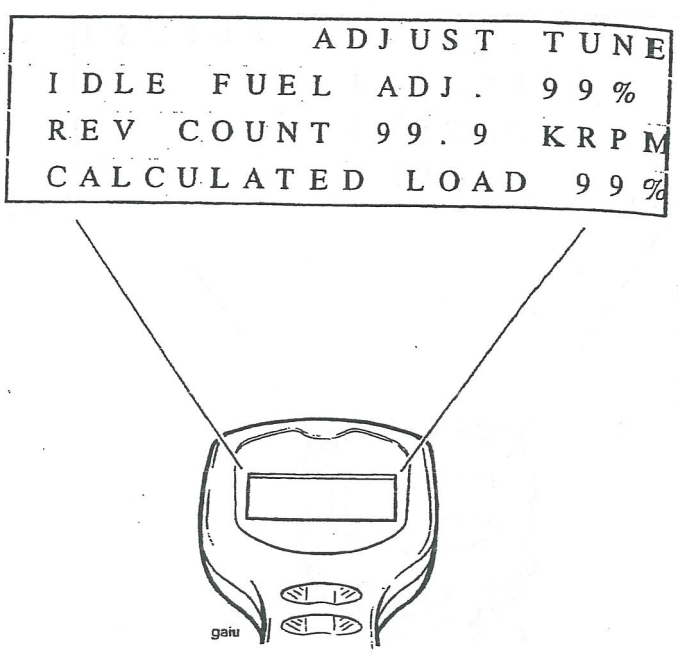

CO setting procedure

Raise the engine temperature until the diagnostic tool allows access to the adjustment keys and make adjustments as necessary. Stop the engine, allow it to cool to below the temperature window for adjustment. Restart the engine and run it until the tool allows adjustment again. Make any further adjustments as necessary to ensure the final setting is correct.
DO NOT OMIT THE SECOND CHECK/ADJUSTMENT.

NOTE:

- **Idle fueling adjustment must always be carried out using an accurate exhaust gas analyser to measure idle carbon monoxide levels.**
- **For details of correct idle CO levels, refer to page 8-89.**

36. ADJUST TUNE (closed throttle position)

ADJUST TUNE
CLOSED THROTTLE
POSITION HAS BEEN
SET

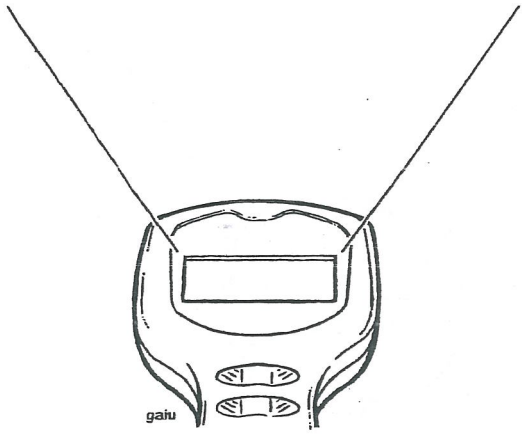

The electronic value of the closed throttle position is automatically reset by the tool.

Press either the validate '✳' or return (↵) to return to the main menu.

37. ADJUST TUNE (set adaptive stepper position)

ADJUST TUNE
ADAPTIVE STEPPER
POSITION HAS BEEN
SET

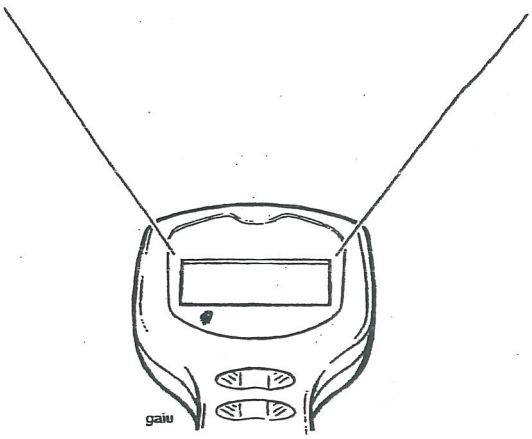

The electronic value of the adaptive stepper position is automatically reset by the tool.

NOTE:

- **The adaptive stepper position should only be reset after repairing a fault such as an induction air leak, out of balance throttle bodies etc. It will also be necessary to reset adaptive stepper position after changing the ECM (particularly if the ECM has come from another motorcycle).**
- **Adaptive stepper position should NEVER be reset after adjusting idle CO levels.**

Press either the validate '✳' or return (↵) to return to the main menu.

38. ADJUST TUNE

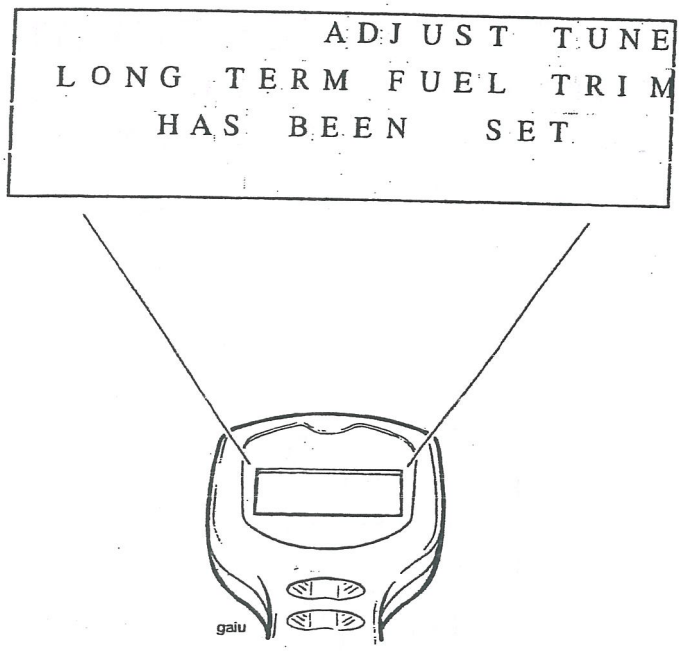

(THIS FUNCTION IS NOT CURRENTLY APPLICABLE ON TT600 or SPEED FOUR) The electronic value of the long term fuel trim setting is automatically reset to nominal by the tool.

Press either the validate '*' or return (↵) to return to the main menu.

39. UPDATE TUNE

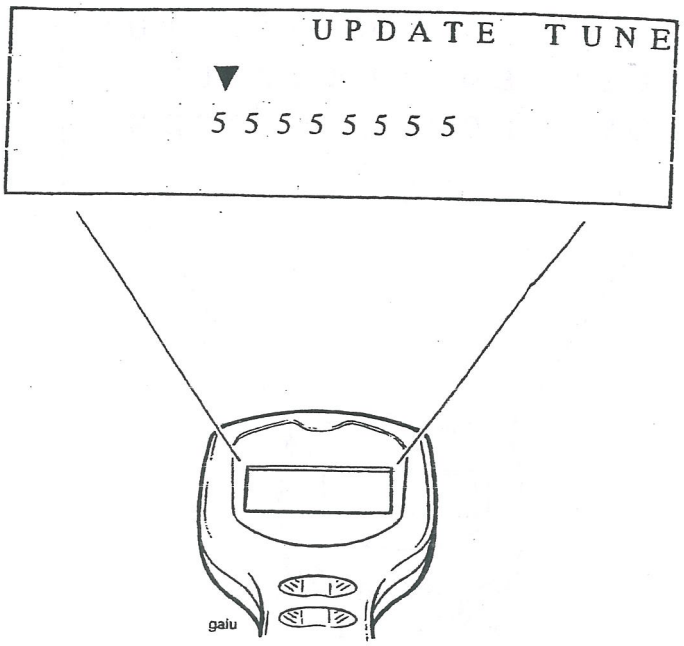

(Accessed from operation 32). On receipt of special instructions from Triumph you may be asked to input a completely new engine tune.

To do this, they will give you a password number which must be entered using the 'Up' and 'Down' keys in the same way as was done to enter your dealer code number.

After entering the final digit, press the Validation key '*' again.

If the password number entered is invalid, the screen shown in operation 40 will be displayed.

If the password number is valid, the tool will briefly display the message, **'PLEASE WAIT, CHECKING ECM TYPE'** then, **'UPDATE TUNE'** (operation 41) will be displayed.

40. UPDATE TUNE

```
UPDATE TUNE

ACCESS DENIED
DISCONNECT & RETRY
```

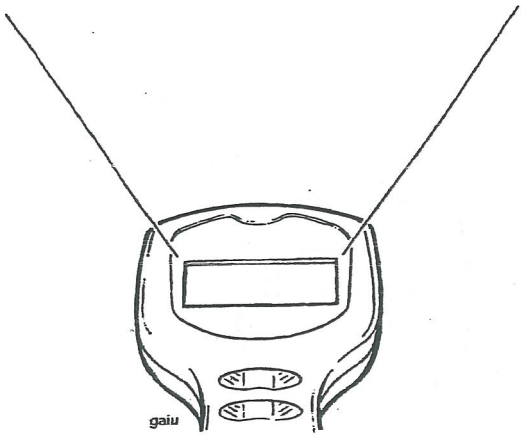

If the Password number has been incorrectly entered, the screen will display **'ACCESS DENIED'**. Press the Validation key '*' to return to **MAIN MENU** (operation 8) and start again.

If after a second attempt the entry is still invalid, the screen will display **'ACCESS DENIED DISCONNECT AND RETRY'**. The diagnostic tool must be disconnected and the complete procedure re-started.

41. UPDATE TUNE

```
UPDATE TUNE
SELECT MODEL
▶SPRINT ST
▼TIGER
```

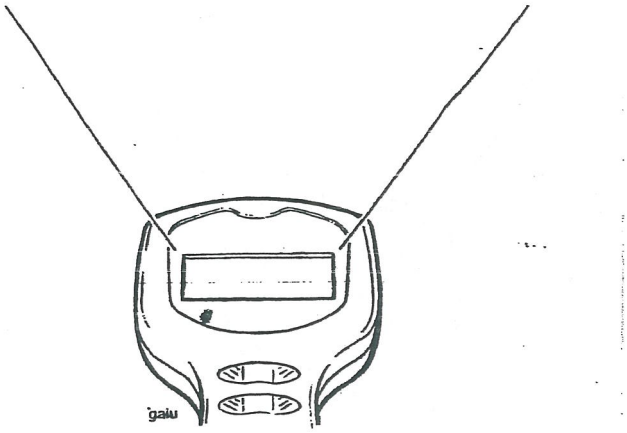

Align the cursor with the model to which a tune is to be downloaded and, when satisfied that the selection is correct, press the validation key '*'.

Once a model has been selected and the validation key pressed, screen 42 will be displayed.

42. UPDATE TUNE

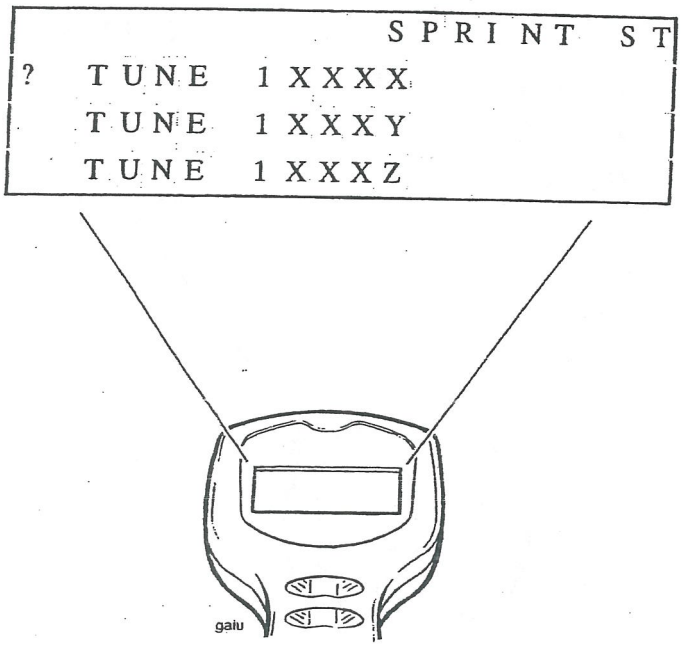

Scroll to the tune required and press the Validation key '*' to move on to operation 43.

Press the help key for information on the applicability of each tune number.

43. UPDATE TUNE

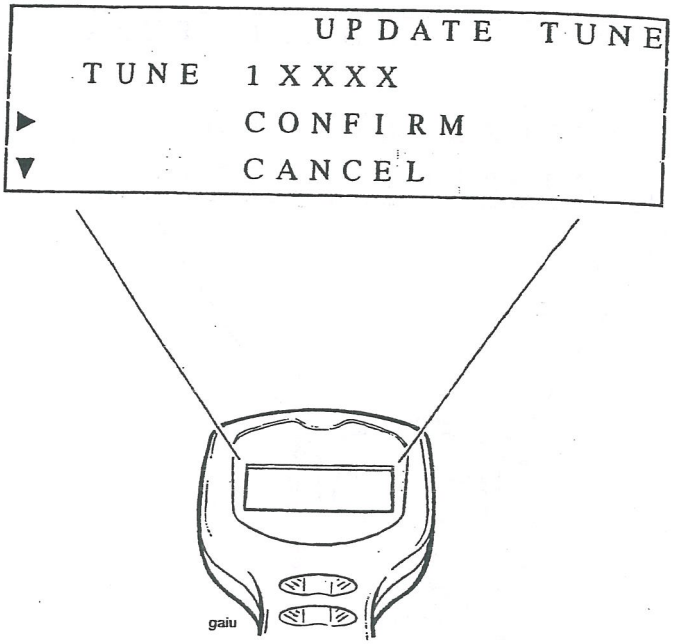

Scroll to either **'CONFIRM'**, **'CANCEL'** or **'QUIT'** (quit option will not be visible until the text has been scrolled) then press the Validation key '*'.

If **'QUIT'** has been selected – this will return to **MAIN MENU** (operation 8)

If **'CANCEL'** has been selected – return to operation 39.

If **'CONFIRM'** has been selected, downloading will begin.

44. UPDATE TUNE (confirm selected)

```
UPDATE TUNE
DOWNLOADING.....
10% COMPLETE
```

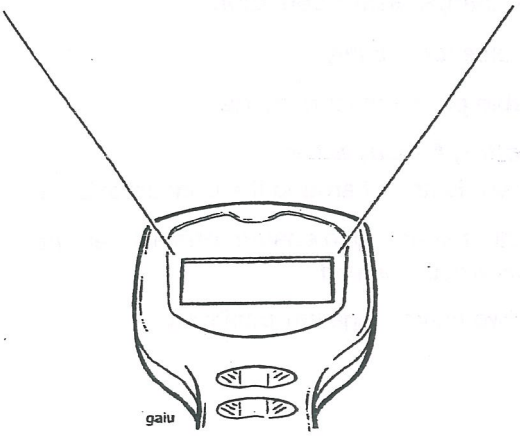

The screen will show **'DOWNLOADING'**, and the selected software will be automatically downloaded into the ECM.

When complete, the screen will display **'DOWNLOAD COMPLETE'**.

Press the Validation key '*' to return to the **'MAIN MENU'** (operation 8).

If downloading has been unsuccessful the screen will display **'DOWNLOAD FAILED'**. Should this message appear, refer to 45, restarting tune download.

Press the Validation key '*' to return to the **'MAIN MENU'** (operation 8).

45. RESTARTING TUNE DOWNLOAD

CAUTION: If, for any reason downloading is interrupted, the ECM will not function and tune download cannot be restarted in the normal way. This is because the tool's operating system has been erased from the ECM's memory and has not yet been fully replaced.

Download interruption can occur for a variety of reasons such as, accidental disconnection of the tool, a flat battery, turning the ignition switch to OFF during download etc.

In these circumstances, a special-tool key-press-sequence must be followed which is described below

To restart download, switch the motorcycle ignition to OFF and disconnect the tool. Reconnect the tool, switch the motorcycle ignition to ON, and scroll through to the screen shown below.

```
TRIUMPH MOTORCYCLES
DIAGNOSTIC TOOL
SOFTWARE V 18.0
2003
```

From this screen, use the following button press sequence:

HELP (?) - HELP (?) - RETURN (↵) - HELP (?) VALIDATE (*).

The update tune password screen will then be displayed. From that screen, download can be restarted in the normal way.

NOTE:

- **The software version number is not relevant to this procedure. All versions of the diagnostic software will operate in the way described.**

ELECTRICAL CONNECTORS

Before beginning any diagnosis, the following connector related information should be noted:

NOTE:

- **A major cause of hidden electrical faults can be traced to faulty electrical connectors. For example:**
- **Dirty/corroded terminals**
- **Damp terminals**
- **Broken or bent cable pins within multiplugs**

For example, the Electronic Control Module relies on the supply of accurate information to enable it to plan the correct fuelling and ignition timing. One dirty terminal will cause an excessive voltage drop resulting in an incorrect signal to the ECM.

If, when carrying out fault diagnosis, a fault appears to clear by simply disconnecting and reconnecting an electrical plug, examine each disconnected plug for the following.

Before Disconnection:

- If testing with a voltmeter, the voltage across a connector should be virtually battery volts (unless a resistor is fitted in the circuit). If there is a noticeable change, suspect faulty/dirty connections.

When Disconnecting A Connector

- Check for a security device which must be released before the connector can be separated. E.G. barb, hook and eye etc.

When Inspecting A Connector

- Check that the individual pins have not been bent
- Check for dampness/dirt/corrosion
- Check cables for security
- Check cable pin joints for damage

When Connecting A Connector

- Ensure there is no dirt around the connector/seal
- Push together squarely to ensure terminals are not bent or incorrectly located
- Push the two halves together positively.

Removal of ECM connectors

1. Press the locking tab in and rotate the clamping ring until a definite click is felt.

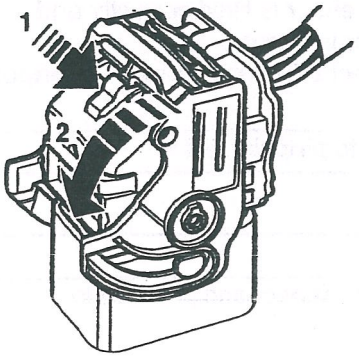

1. Locking tab
2. Clamping ring

2. Remove the connector from the ECM socket.

Refitting of ECM connectors.

NOTE:

- **The connectors are both colour coded and individually shaped. The grey connector fits into the grey ECM socket and the black connector fits into the black ECM socket.**

CAUTION: Damage to the connector pins may result if an attempt to fit the connectors incorrectly is made.

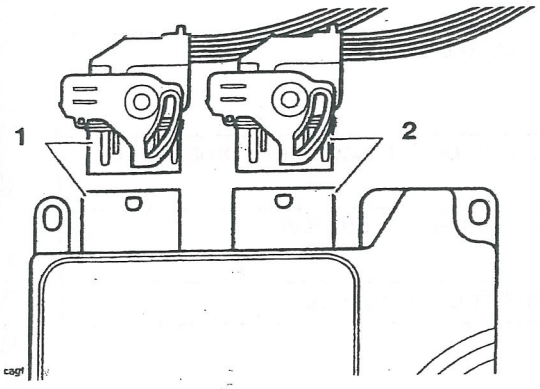

1. Grey socket and connector
2. Black socket and connector

3. Fit the connector into its socket and, whilst holding the connector in place, rotate the clamping ring, locking it into place behind the locking tab.

4. Check that both connectors are correctly fitted and their clamping rings are fully rotated and locked.

ECM Connector Pin Numbering

The diagram below shows the pin sequence of the ECM main connectors. These pin numbers correspond directly with the pin numbers given in the diagnostic routines and schematic wiring diagrams used throughout this manual.

Each connector has 32 pins, arranged in four rows, marked 1, 2, 3 and 4 and eight columns as shown below. The first of these columns is column A and the eighth column is column H.

NOTE:

- **It is important to note that the first column is not marked with a letter A due to space constraints on the face of the connector.**

Each ECM connector pin location is described throughout this manual by identifying the connector, 1 (black) or 2 (grey), followed by the column number, and then the row number in which it is situated. In the example below, pin 1/F2 is shown by the intersecting lines.

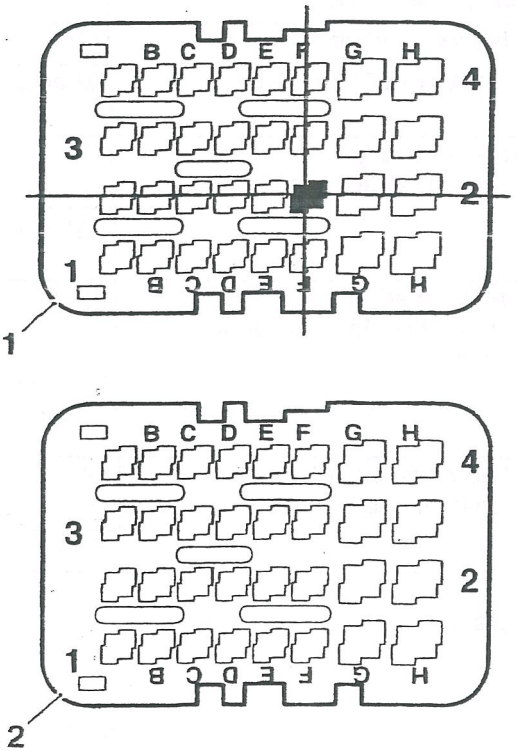

ECM Connector Pin Numbers

1. Black connector, 1/
2. Grey connector, 2/

FURTHER DIAGNOSIS

The tables which follow will, if used correctly, help to pinpoint a fault in the system once a diagnostic trouble code has been stored.

CRANKSHAFT SENSOR

Fault Code	Possible cause	Action
P0335	Crankshaft sensor system fault	View & note diagnostic tool 'freeze frame' data if available. Ensure sensor is fitted correctly and connector is secure. Disconnect ECM and proceed to pinpoint test 1
P1335	Crank toothed wheel / screen cable fault	Proceed to pinpoint test 5

Pinpoint Tests

Test	Result	Action
1 Check terminal and cable integrity: - ECM pin 1/A1 - ECM pin 1/B1	OK	Disconnect sensor and proceed to test 2
	Faulty	Rectify fault, proceed to test 7
2 Check cable for short circuit: - ECM pin 1/A1 to earth - ECM pin 1/B1 to earth	OK	Proceed to test 3
	Short circuit	Locate and rectify wiring fault, proceed to test 7
3 Check cable continuity: - ECM pin 1/B1 to sensor pin 1 - ECM pin 1/A1 to sensor pin 2	OK	Proceed to test 4
	Open circuit	Locate and rectify wiring fault, proceed to test 7
4 Check cable for short circuit: - ECM pin 1/A1 to ECM pin 1/B1	OK	Renew crankshaft sensor, proceed to test 7
	Short circuit	Locate and rectify wiring fault, proceed to test 7
5 Check cable continuity: - Sensor screen cable to earth	OK	Proceed to test 6
	Open circuit	Locate and rectify wiring fault, proceed to test 7
6 Check crank toothed wheel: - Damage to teeth- Magnetic debris contamination	OK	Proceed to test 7
	Faulty	Clean / renew toothed wheel, proceed to test 7
7 Reconnect harness, clear fault code and run engine to verify fault cleared	OK	Action complete – quit test
	Fault still present	Contact Triumph service

Circuit Diagram

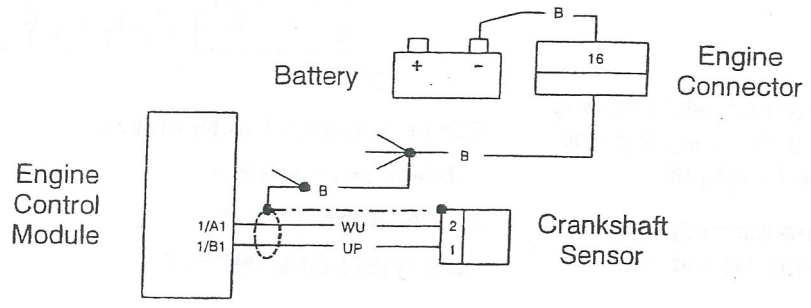

IDLE AIR CONTROL

Fault Code	Possible cause	Action
P0505	IACV stepper motor / wiring fault	View & note diagnostic tool 'freeze frame' data if available. View & note diagnostic tool 'sensor' data. Ensure sensor connector is secure. Disconnect ECM and proceed to pinpoint test 1

Pinpoint Tests

Test	Result	Action
1 Check cable and terminal integrity: - ECM pin 1/E1 - ECM pin 1/E2 - ECM pin 1/F1 - ECM pin 1/F2	OK	Proceed to test 2
	Faulty	Rectify fault, proceed to test 7
2 Check resistance value: - ECM pin 1/E1 to ECM pin 1/F1 - ECM pin 1/E2 to ECM pin 1/F2	47 to 59Ω	Disconnect stepper motor and proceed to test 3
	Open circuit	Proceed to test 4
	Short circuit	Disconnect stepper motor and proceed to test 5
3 Check cable for short circuit: - ECM pin 1/E1 to earth - ECM pin 1/E2 to earth - ECM pin 1/F1 to earth - ECM pin 1/F2 to earth	OK	Proceed to test 7
	Short circuit	Locate and rectify wiring fault, proceed to test 7
4 Check cable continuity: - ECM pin 1/E1 to stepper motor pin A - ECM pin 1/E2 to stepper motor pin B - ECM pin 1/F2 to stepper motor pin C - ECM pin 1/F1 to stepper motor pin D	OK	Proceed to test 6
	Open circuit	Locate and rectify wiring fault, proceed to test 7
Check cable for short circuit: - ECM pin 1/E1 to ECM pin 1/F1 - ECM pin 1/E2 to ECM pin 1/F2	OK	Proceed to test 6
	Short circuit	Locate and rectify wiring fault, proceed to test 7
6 Check stepper motor resistance: - Motor pin A to motor pin D - Motor pin B to motor pin C	47 to 59Ω	Proceed to test 7
	Faulty	Renew stepper motor, proceed to test 7
7 Reconnect harness, clear fault code and run diagnostic tool function test to visually verify operation of stepper motor	OK	Action complete - quit test
	Fault	Contact Triumph service

Circuit Diagram

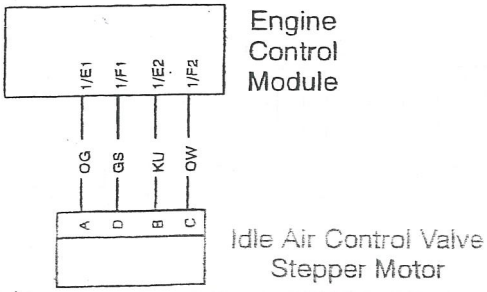

FUEL INJECTORS

Fault Code	Possible cause	Action
P0201/02/03/04	Injection system fault – Injector 1/2/3/4 - Misfire indicates open circuit - Flooding indicates short circuit	View & note diagnostic tool 'freeze frame' data if available. Ensure relevant injector connector is secure. Disconnect ECM and proceed to pinpoint test 1
P1201/02/03/04	Open or short circuit – Injector 1/2/3/4	
P1205/06/07/08	Short circuit to battery+ – Injector 1/2/3/4	Disconnect relevant injector and proceed to pinpoint test 5

Pinpoint Tests

Test	Result	Action
1 Check cable and terminal integrity: - ECM pin 1/G2 - ECM pin 1/G3 - ECM pin 1/H2 - ECM pin 1/H3	OK	Proceed to test 2
	Faulty	Rectify fault, proceed to test 7
2 Check resistance value: - ECM pin 1 to ECM pin 1/H3 (injector 1) - ECM pin 1 to ECM pin 1/H2 (injector 2) - ECM pin 1 to ECM pin 1/G2 (injector 3) - ECM pin 1 to ECM pin 1/G3 (injector 4)	15.5 to 16.3Ω	Disconnect relevant injector and proceed to test 3
	Open circuit	Proceed to test 4
	Short circuit	Disconnect relevant injector and proceed to test 5
3 Check cable for short circuit: - ECM pin 1/G2 to earth - ECM pin 1/G3 to earth - ECM pin 1/H2 to earth - ECM pin 1/H3 to earth	OK	Proceed to test 7
	Short circuit	Locate and rectify wiring fault, proceed to test 7
4 Check cable continuity: - ECM pin 1/H4 to relevant injector pin 2 - ECM pin 1/H3 to injector 1 pin 1 - ECM pin 1/H2 to injector 2 pin 1 - ECM pin 1/G3 to injector 3 pin 1 - ECM pin 1/G2 to Injector 4 pin 1	OK	Proceed to test 6
	Open circuit	Locate and rectify wiring fault, proceed to test 7
Check cable for short circuit: - ECM pin 1/H4 to ECM pin 1/H3 (inj 1) - ECM pin 1/H4 to ECM pin 1/H2 (inj 2) - ECM pin 1/H4 to ECM pin 1/G2 (inj 3) - ECM pin 1/H4 to ECM pin 1/G3 (inj 4)	OK	Proceed to test 6
	Short circuit	Locate and rectify wiring fault, proceed to test 7
Check relevant injector resistance: - Injector pin 1 to injector pin 2	15.5 to 16.3Ω	Proceed to test 7
	Faulty	Renew relevant injector, proceed to test 7
Reconnect harness, clear fault code and run engine to verify fault cleared	OK	Action complete - quit test
	Fault still present	Contact Triumph service

rcuit Diagram

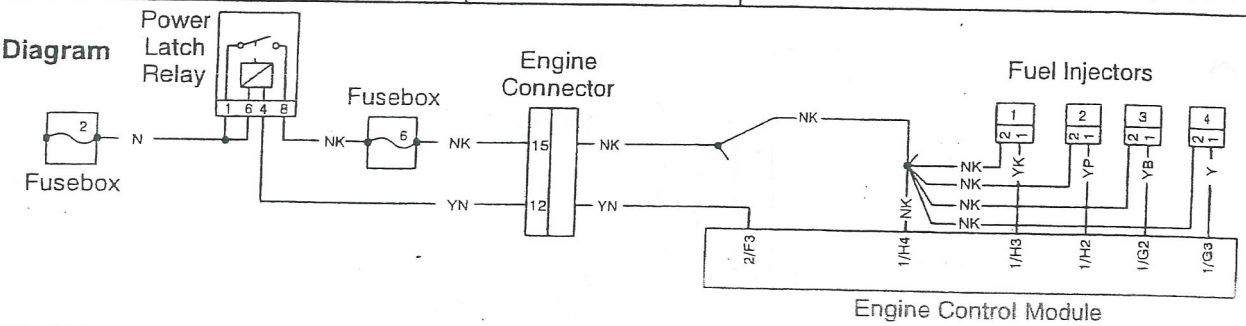

THROTTLE POSITION SENSOR

Fault Code	Possible cause	Action
P0120	Throttle position sensor system fault	View & note diagnostic tool 'freeze frame' data if available.
P0122	Sensor low input voltage	View & note diagnostic tool 'sensor' data.
P0123	Sensor high input voltage	Ensure sensor connector is secure. Disconnect ECM and proceed to pinpoint test 1

Pinpoint Tests

Test	Result	Action
1 Check cable and terminal integrity: - ECM pin 1/B3 - ECM pin 1/E3 - ECM pin 1/E4	OK	Disconnect sensor and proceed to test 2
	Faulty	Rectify fault, proceed to test 5
2 Check cable for short circuit: - ECM pin 1/E3 to earth	OK	Proceed to test 3
	Short circuit	Locate and rectify wiring fault, proceed to test 5
3 Check cable continuity: - ECM pin 1/E4 to sensor pin 1 - ECM pin 1/E3 to sensor pin 2 - ECM pin 1/B3 to sensor pin 3	OK	Proceed to test 4
	Open circuit	Locate and rectify wiring fault, proceed to test 5
4 Check cable for short circuit: - ECM pin 1/E3 to ECM pin 1/B3 - ECM pin 1/E3 to ECM pin 1/E4	OK	Renew throttle position sensor, proceed to test 5
	Short circuit	Locate and rectify wiring fault, proceed to test 5
5 Reconnect harness, clear fault code and run engine to verify fault cleared	OK	Action complete - quit test
	Fault still present	Contact Triumph service

Circuit Diagram

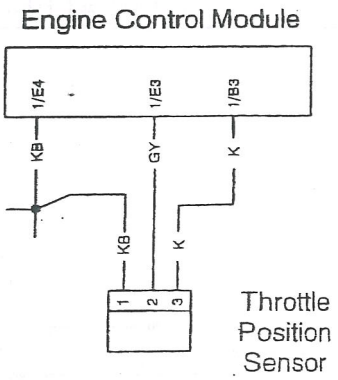

PURGE VALVE

Fault Code	Possible cause	Action
P0443	Purge valve system fault	View & note diagnostic tool 'sensor' data. Ensure purge valve connector is secure. Disconnect ECM and proceed to pinpoint test 1
P0444	Open circuit or short circuit to earth	
P0445	Short circuit to battery+	Disconnect purge valve and proceed to pinpoint test 5

Pinpoint Tests

	Test	Result	Action
1	Check cable and terminal integrity: - ECM pin 1/G1	OK	Proceed to test 2
		Faulty	Rectify fault, proceed to test 7
2	Check resistance value: - ECM pin 1/H4 to ECM pin 1/G1	26Ω	Disconnect purge valve and proceed to test 3
		Open circuit	Proceed to test 4
		Short circuit	Disconnect purge valve and proceed to test 5
3	Check cable for short circuit: - ECM pin 1/G1 to earth	OK	Proceed to test 7
		Short circuit	Locate and rectify wiring fault, proceed to test 7
4	Check cable continuity: - ECM pin 1/G1 to valve pin 1 - ECM pin 1/H4 to valve pin 2	OK	Proceed to test 6
		Open circuit	Locate and rectify wiring fault, proceed to test 7
5	Check cable for short circuit: - ECM pin 1/H4 to ECM pin 1/G1	OK	Proceed to test 6
		Short circuit	Locate and rectify wiring fault, proceed to test 7
	Check purge valve resistance: - Valve pin 1 to valve pin 2	26Ω	Proceed to test 7
		Faulty	Renew purge valve, proceed to test 7
	Reconnect harness, clear fault code and run diagnostic tool function test to visually verify operation of purge valve	OK	Action complete - quit test
		Fault	Contact Triumph service

Circuit Diagram

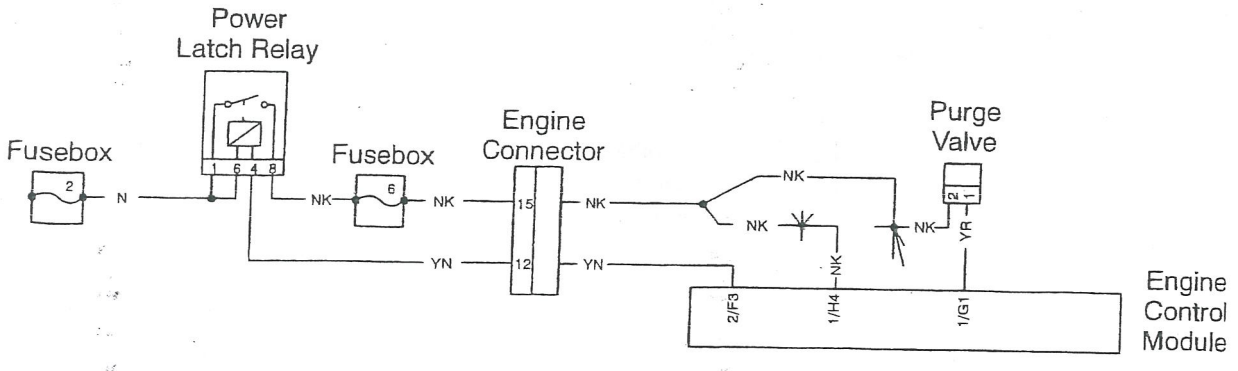

IGNITION COILS

Fault Code	Possible cause	Action
P0351/52/53/54	Ignition system fault - Ign coil 1/2/3/4	View & note diagnostic tool 'freeze frame' data if available. Ensure relevant ign coil connector is secure. Disconnect ECM and proceed to pinpoint test 1:-
P1351/52/53/54	Open or short circuit - Ign coil 1/2/3/4	
P1355/56/57/58	Short circuit to battery+ - Ign coil 1/2/3/4	Disconnect relevant ign coil and proceed to pinpoint test 5

Pinpoint Tests

	Test	Result	Action
1	Check cable and terminal integrity: - ECM pin 2/H1 - ECM pin 2/H2 - ECM pin 2/H3 - ECM pin 2/H4	OK	Proceed to test 2
		Faulty	Rectify fault, proceed to test 7
2	Check resistance value: Fuel pump relay pin 8 to - ECM pin 2/H1 (ign coil 1) - ECM pin 2/H4 (ign coil 2) - ECM pin 2/H2 (ign coil 3) - ECM pin 2/H3 (ign coil 4)	0.8Ω	Disconnect relevant ign coil and proceed to test 3
		Open circuit	Proceed to test 4
		Short circuit	Disconnect relevant ign coil and proceed to test 5
3	Check cable for short circuit: - ECM pin 2/H1 to earth - ECM pin 2/H2 to earth - ECM pin 2/H3 to earth - ECM pin 2/H4 to earth	OK	Proceed to test 7
		Short circuit	Locate and rectify wiring fault, proceed to test 7
4	Check cable continuity: Power latch relay pin 8 to any ign coil pin 2 - ECM pin 2/H1 to ign coil 1 pin 1 - ECM pin 2/H4 to ign coil 2 pin 1 - ECM pin 2/H2 to ign coil 3 pin 1 - ECM pin 2/H3 to ign coil 4 pin 1	OK	Proceed to test 6
		Open circuit	Locate and rectify wiring fault, proceed to test 7
	Check cable for short circuit: Power latch relay pin 8 to - ECM pin 2/H1 (ign coil 1) - ECM pin 2/H4 (ign coil 2) - ECM pin 2/H2 (ign coil 3) - ECM pin 2/H3 (ign coil 4)	OK	Proceed to test 6
		Short circuit	Locate and rectify wiring fault, proceed to test 7
6	Check relevant ign coil resistance: - Ign coil pin 1 to ign coil pin 2	0.8Ω	Proceed to test 7
		Faulty	Renew relevant ign coil, proceed to test 7
7	Reconnect harness, clear fault code and run engine to verify fault cleared	OK	Action complete - quit test
		Fault still present	Contact Triumph service

Circuit Diagram

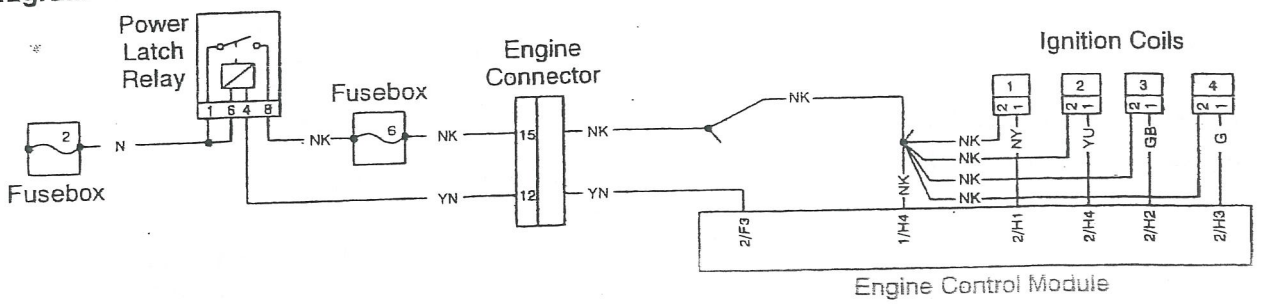

COOLANT TEMPERATURE SENSOR

Fault Code	Possible cause	Action
P0115	Coolant temperature system fault	View & note diagnostic tool 'freeze frame' data if available. View & note diagnostic tool 'sensor' data. Ensure sensor connector is secure. Disconnect ECM and proceed to pinpoint test 1:-
P0117	Open circuit, or short circuit to battery+	
P0118	Short circuit to earth	Disconnect sensor and proceed to test 6
P0119	Voltage signal too high	proceed to pinpoint test 4

Pinpoint Tests

Test	Result	Action
1 Check cable and terminal integrity: - ECM pin 1/B2 - ECM pin 1/E4	OK	Proceed to test 2
	Faulty	Rectify fault, proceed to test 7
2 Check resistance value: - ECM pin 1/B2 to ECM pin 1/E4 (Temperature dependent,-see below)	OK	Disconnect temp sensor and proceed to test 6
	Open circuit	Proceed to test 3
	Short circuit	Disconnect temp sensor and proceed to test 4
3 Check cable continuity: - ECM pin 1/B2 to sensor pin 1 - ECM pin 1/E4 to sensor pin 2	OK	Proceed to test 5
	Open circuit	Locate and rectify wiring fault, proceed to test 7
4 Check cable for short circuit: - ECM pin 1/B2 to ECM pin 1/E4	OK	Proceed to test 5
	Short circuit	Locate and rectify wiring fault, proceed to test 7
5 Check sensor resistance: - Sensor pin 1 to sensor pin 2 (Temperature dependent,-see below)	OK	Proceed to test 7
	Faulty	Renew temp sensor, proceed to test 7
6 Check cable for short circuit: - ECM pin 1/B2 to earth	OK	Proceed to test 7
	Short circuit	Locate and rectify wiring fault, proceed to test 7
7 Reconnect harness, clear fault code and run engine to verify fault cleared	OK	Action complete - quit test
	Fault	Contact Triumph service

Resistance data under typical conditions:

Warm engine - 200 to 400Ω.

Cold engine:

20ºC ambient 2.35 to 2.65KΩ.

10ºC ambient 3.60 to 4.00KΩ.

0ºC ambient 5.60 to 6.25KΩ

Circuit Diagram

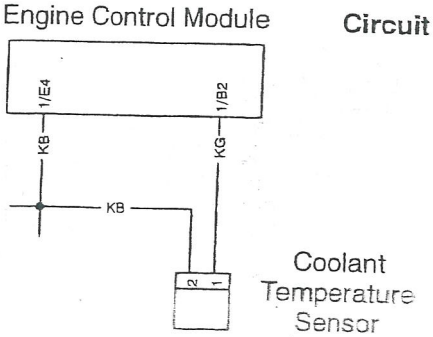

INLET AIR TEMPERATURE SENSOR

Fault Code	Possible cause	Action
P0110	Inlet air temperature system fault	View & note diagnostic tool 'freeze frame' data if available. View & note diagnostic tool 'sensor' data. Ensure sensor connector is secure. Disconnect ECM and proceed to pinpoint test 1:-
P0113	Open circuit, or short circuit to battery+	
P0112	Short circuit to earth	Disconnect sensor and proceed to pinpoint test 6

Pinpoint Tests

	Test	Result	Action
1	Check cable and terminal integrity: - ECM pin 1/D1 - ECM pin 1/E4	OK	Proceed to test 2
		Faulty	Rectify fault, proceed to test 7
2	Check resistance value: - ECM pin 1/D1 to ECM pin 1/E4 (Temperature dependent-see below)	OK	Disconnect temp sensor and proceed to test 6
		Open circuit	Proceed to test 3
		Short circuit	Disconnect temp sensor and proceed to test 4
3	Check cable continuity: - ECM pin 1/D1 to sensor pin 1 - ECM pin 1/E4 to sensor pin 2	OK	Proceed to test 5
		Open circuit	Locate and rectify wiring fault, proceed to test 7
4	Check cable for short circuit: - ECM pin 1/D1 to ECM pin 1/E4	OK	Proceed to test 5
		Short circuit	Locate and rectify wiring fault, proceed to test 7
5	Check sensor resistance: - Sensor pin 1 to sensor pin 2 (Temperature dependent-see below)	OK	Proceed to test 7
		Faulty	Renew temp sensor, proceed to test 7
6	Check cable for short circuit: - ECM pin 1/D1 to earth	OK	Proceed to test 7
		Short circuit	Locate and rectify wiring fault, proceed to test 7
7	Reconnect harness, clear fault code and run engine to verify fault cleared	OK	Action complete - quit test
		Fault	Contact Triumph service

If engine is warm, remove sensor and allow time to cool to ambient prior to test.

Resistance data:

Ambient temp	Resistance value
30ºC	1.6 to 1.8KΩ
25ºC	1.9 to 2.2KΩ
20ºC	2.3 to 2.7KΩ
15ºC	2.9 to 3.3KΩ
10ºC	3.5 to 4.0KΩ
5ºC	4.4 to 4.9KΩ
0ºC	5.5 to 6.1KΩ

Circuit Diagram

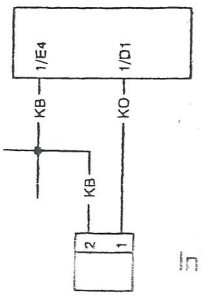

Engine Control Module

Inlet Air Temperature Sensor

FUEL PUMP

Fault Code	Possible cause	Action
P0230	Fuel pump system fault	Check if pump runs briefly when ignition is switched on. Ensure fuel pump connector is secure. Disconnect ECM and proceed to pinpoint test 1:-
P1231	Open circuit, or short circuit to earth	
P1232	Short circuit to battery+	Disconnect fuel pump and proceed to pinpoint test 4

Pinpoint Tests

Test	Result	Action
1 Check cable and terminal integrity: - ECM pin 1/H1	OK	Disconnect fuel pump and proceed to test 2
	Faulty	Rectify fault, proceed to test 5
2 Check cable for short circuit: - ECM pin 1/H1 to earth	OK	Proceed to test 3
	Short circuit	Locate and rectify wiring fault, proceed to test 5
3 Check cable continuity: - ECM pin 1/H1 to fuel pump pin 2 - Fuel pump pin 1 to alarm control unit pin1	OK	Proceed to test 4
	Open circuit	Locate and rectify wiring fault, proceed to test 5
4 Check cable for short circuit: - ECM pin 1/H1 to ECM pin 2/E1	OK	Proceed to test 5
	Short circuit	Locate and rectify wiring fault, proceed to test 5
5 Reconnect harness, clear fault code and run diagnostic tool function test to verify fault cleared	OK	Action complete - quit test
	Fault still present	Contact Triumph service

Circuit Diagram

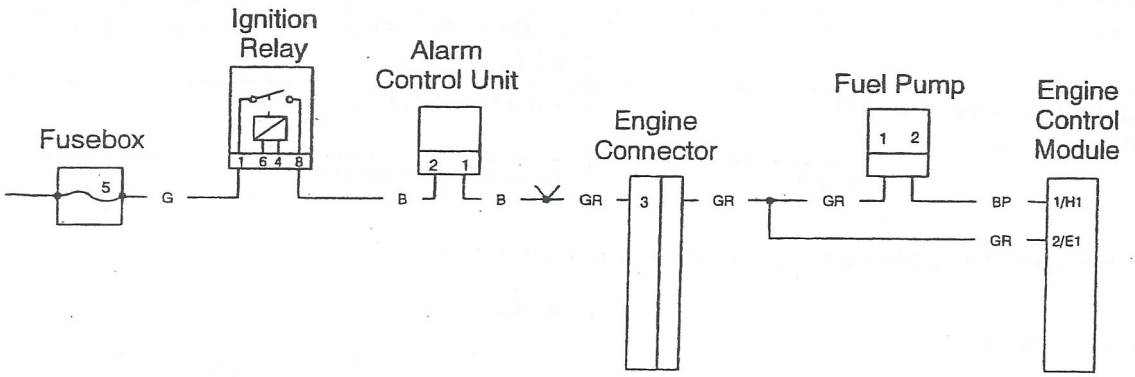

SENSOR SUPPLY VOLTAGE

Fault Code	Possible cause	Action
P1560	Engine control module / wiring fault	View & note diagnostic tool 'sensor' data. Disconnect ECM and proceed to pinpoint test 1

Pinpoint Tests

	Test	Result	Action
1	Check cable and terminal integrity	OK	Disconnect throttle position sensor and air pressure sensor, proceed to test 2
	- ECM pin 1/B3	Faulty	Rectify fault, proceed to test 4
2	Check for short circuit:	OK	Reconnect ECM, proceed to test 3
	- ECM pin 1/B3 to ECM pin 1/E4	Short circuit	Locate and rectify wiring fault, proceed to test 4
3	With ignition 'on', check voltage at:	4.5 to 5.5v	Proceed to test 4
	- ECM pin 1/B3	Faulty	Renew ECM, proceed to test 4
4	Reconnect harness, clear fault code and run engine to verify fault cleared	OK	Action complete - quit test
		Fault still present	Contact Triumph service

Circuit Diagram

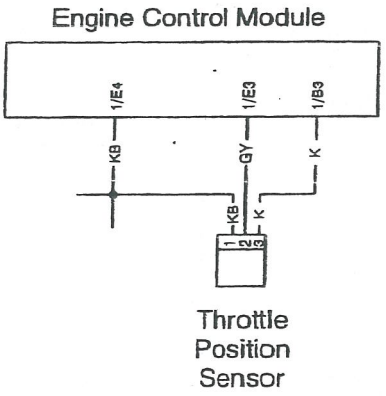

SYSTEM VOLTAGE

Fault Code	Possible cause	Action
P0560	Bike voltage system fault	View & note diagnostic tool 'sensor' data. Ensure voltage across battery is acceptable, note voltage.
P0562	Wiring / alternator / battery fault - low voltage	Disconnect ECM and proceed to pinpoint test 1
P0563	Alternator fault - high voltage	Ensure alternator output voltage is acceptable, note voltage.

Pinpoint Tests

Test	Result	Action
1 Check cable and terminal integrity: - ECM pin 2/E1	OK	Proceed to test 2
	Faulty	Rectify fault, proceed to test 3
2 With Ignition 'on', check voltage at: - ECM pin 2/E1	Same as 'across battery' voltage	Proceed to test 3
	Less than 'across battery' voltage	Locate and rectify wiring fault, proceed to test 3
3 Reconnect harness, clear fault code and run engine to verify fault cleared	OK	Action complete - quit test
	Fault still present	Contact Triumph service

Circuit Diagram

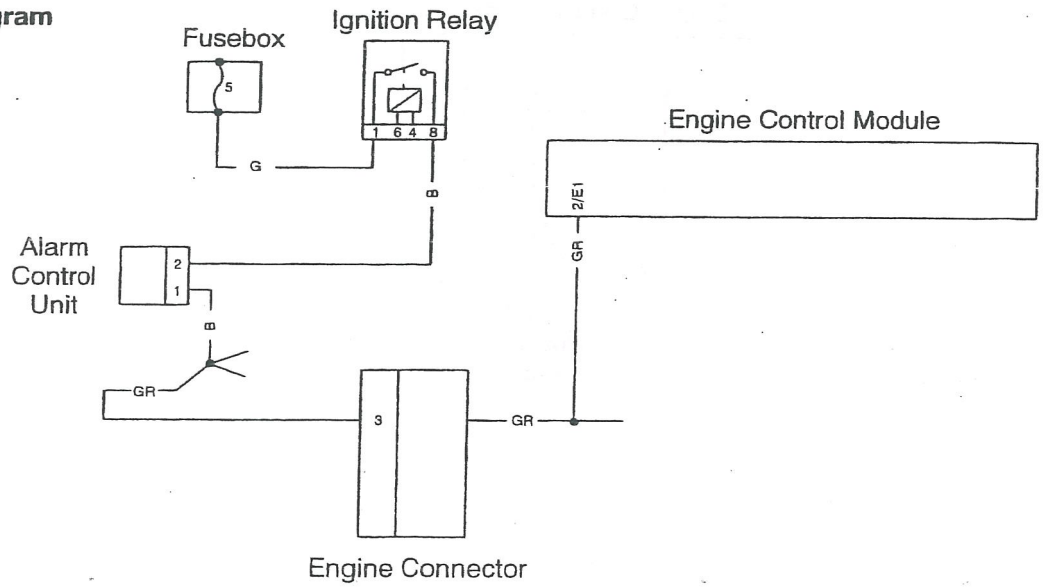

MALFUNCTION INDICATION LAMP

Fault Code	Possible cause	Action
P1600	MIL system fault	Ensure instrument connector is secure and bulb is operational - renew if faulty. Disconnect ECM and proceed to pinpoint test 1:-
P1601	Open circuit, or short circuit to earth	
P1602	Short circuit to battery+	Disconnect instrument connector and proceed to test 4

Pinpoint Tests

Test	Result	Action
1 Check cable and terminal integrity: - ECM pin 1/D4	OK	Disconnect instrument connector and proceed to test 2
	Faulty	Rectify fault, proceed to test 5
2 Check cable for short circuit: - ECM pin 1/D4 to earth	OK	Proceed to test 3
	Short circuit	Locate and rectify wiring fault, proceed to test 5
3 Check cable continuity: - Instrument plug pin 8 to ECM pin 1/D4 - Instrument plug pin 5 to alarm pin 1	OK	Proceed to test 4
	Open circuit	Locate and rectify wiring fault, proceed to test 5
4 Check for short circuit: - ECM pin 1/D4 to ECM pin 2/E1	OK	Proceed to test 5
	Short circuit	Locate and rectify wiring fault, proceed to test 5
5 Reconnect harness clear fault code and switch ignition 'on' to verify fault cleared	OK	Action complete - quit test
	Fault still present	Contact Triumph service

Circuit Diagram

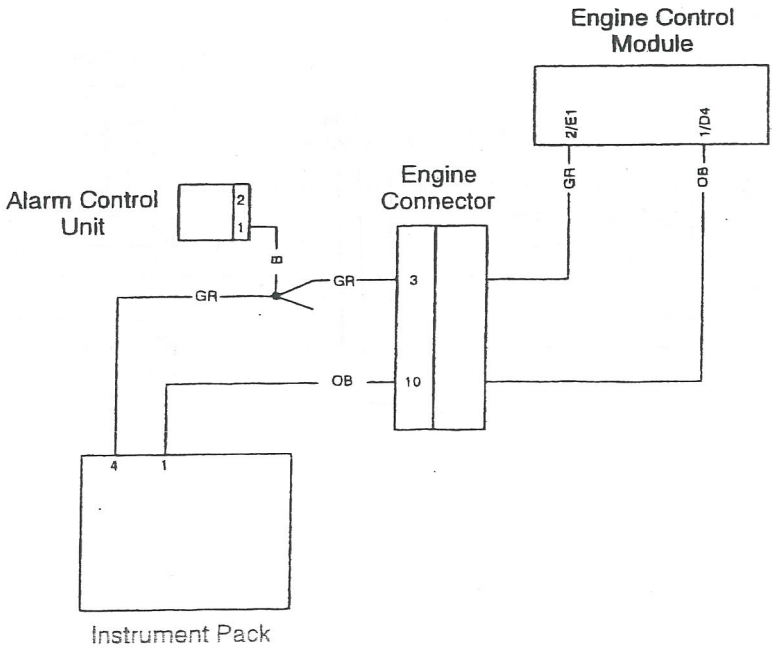

COOLING FAN

Fault Code	Possible cause	Action
P1551	Cooling fan system fault	View & note diagnostic tool 'sensor' data. Ensure fan connector is secure. Disconnect ECM and proceed to pinpoint test1:-
P1552	Open circuit, or short circuit to earth	
P1553	Short circuit to battery+	Disconnect fan and proceed to pinpoint test 4

Pinpoint Tests

Test	Result	Action
1 Check cable and terminal integrity: - ECM pin 2/G1 & 2/G2	OK	Disconnect fan and proceed to test 2
	Faulty	Rectify fault, proceed to test 5
2 Check cable for short circuit: - ECM pin 2/G1 to earth - ECM pin 2/G2 to earth	OK	Proceed to test 3
	Short circuit	Locate and rectify wiring fault, proceed to test 5
3 Check cable continuity: - Fan pin 2 to ECM pin 2/G1 & 2/G2 - Fan pin 1 to main power relay pin 8	OK	Proceed to test 4
	Open circuit	Locate and rectify wiring fault, proceed to test 5
4 Check cable for short circuit: - ECM pin 2/G1 & 2/G2 to ECM pin 1/H4	OK	Proceed to test 5
	Short circuit	Locate and rectify wiring fault, proceed to test 5
5 Reconnect harness, clear fault code and run diagnostic tool function test to visually verify operation of cooling fan	OK	Action complete - quit test
	Fault still present	Contact Triumph service

Circuit Diagram

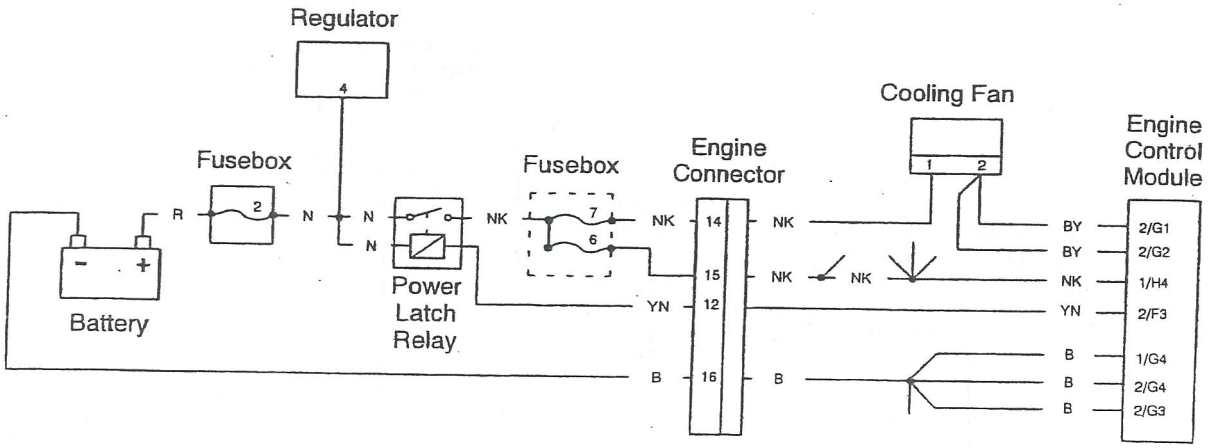

COOLANT TEMPERATURE GAUGE

Fault Code	Possible cause	Action
P1115	Temperature gauge system fault	View & note 'freeze frame' data if available. View & note 'sensor' data. Ensure instrument connector is secure. Disconnect ECM and proceed to pinpoint test 1:-
P1116	Open circuit, or short circuit to earth	
P1117	Short circuit to battery+	Disconnect instruments and proceed to pinpoint test 5

Pinpoint Tests

Test	Result	Action
Check cable and terminal integrity: - ECM pin 2/B1	OK	Disconnect instruments and proceed to test 2
	Faulty	Rectify fault, proceed to test 5
2 Check cable for short circuit: - ECM pin 2/B1 to earth	OK	Proceed to test 3
	Short circuit	Locate and rectify wiring fault, proceed to test 5
3 Check cable continuity: - Instrument pin 9 to ECM pin 2/B1 - Instrument pin 1 to earth - Instrument pin 5 to alarm control unit pin 1	OK	Proceed to test 4
	Open circuit	Locate and rectify wiring fault, proceed to test 5
4 Check cable for short circuit: ECM pin 2/B1 to ECM pin 2/E1	OK	Renew instruments, proceed to test 5
	Short circuit	Locate and rectify wiring fault, proceed to test 5
5 Reconnect harness, clear fault code and run diagnostic tool function test to visually verify operation of instruments	OK	Action complete - quit test
	Fault still present	Contact Triumph service

Circuit Diagram

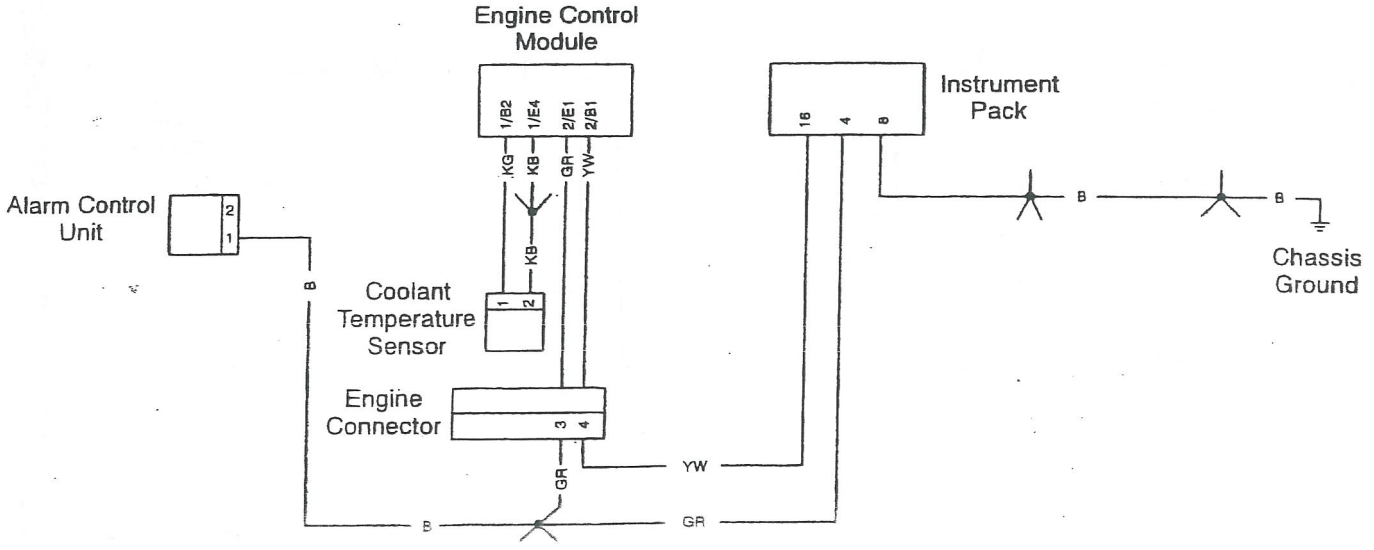

TACHOMETER

Fault Code	Possible cause	Action
P1385	Tachometer system fault	View & note 'freeze frame' data if available. View & note 'sensor' data. Ensure instrument connector is secure. Disconnect ECM and proceed to pinpoint test 1:-
P1386	Open circuit, or short circuit to earth	
P1387	Short circuit to battery+	Disconnect tachometer and proceed to pinpoint test 5

Pinpoint Tests

Test	Result	Action
1 Check cable and terminal integrity: - ECM pin 2/A1	OK	Disconnect instrument and proceed to test 2
	Faulty	Rectify fault, proceed to test 5
2 Check cable for short circuit: - ECM pin 2/A1 to earth	OK	Proceed to test 3
	Short circuit	Locate and rectify wiring fault, proceed to test 5
3 Check cable continuity: - Instrument pin 7 to ECM pin 2/A1 - Instrument pin 1 to earth - Instrument pin 5 to alarm control unit pin1	OK	Proceed to test 4
	Open circuit	Locate and rectify wiring fault, proceed to test 5
4 Check cable for short circuit: - ECM pin 2/A1 to ECM pin 2/E1	OK	Renew tachometer, proceed to test 5
	Short circuit	Locate and rectify wiring fault, proceed to test 5
5 Reconnect harness, clear fault code and run diagnostic tool function test to visually verify operation of tachometer	OK	Action complete - quit test
	Fault still present	Contact Triumph service

Circuit Diagram

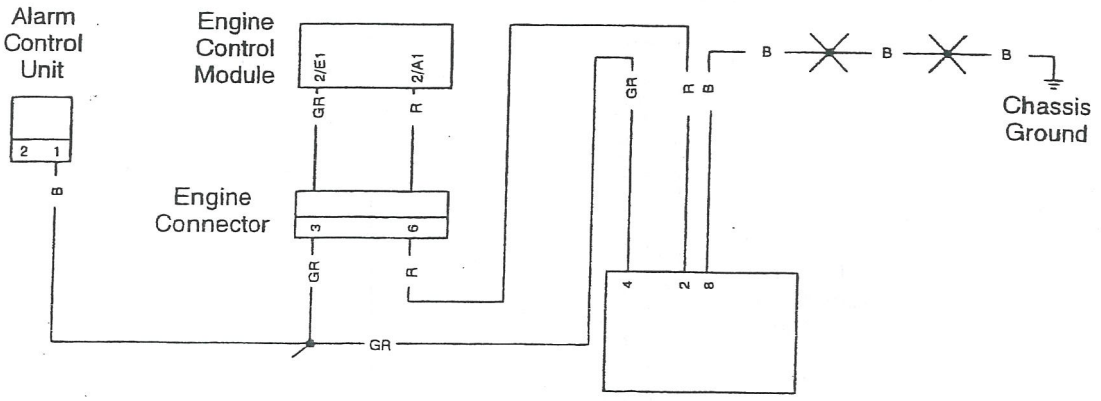

FAULT FINDING - NON ELECTRICAL

Symptom	Possible cause(s)
Poor throttle response at low RPM	Excessively low/high C.O. setting
	Low fuel pressure caused by filter blockage/leaks
	Low fuel pressure caused by loose fuel pipes to the fuel pump and filter
Cutting out at idle	Throttle bodies out of balance
	IACV (Idle Air Control Valve) inoperative
	Low fuel pressure caused by loose fuel pipes to the fuel pump and filter.
	Excessively low/high C.O. setting
	Low fuel pressure
Poor response to C.O. adjustment when using the Actia Diagnostic Tool	Weak mixture caused by air leak at the throttle body/transition piece to cylinder head face
	Low fuel pressure caused by loose fuel pipes to the fuel pump and filter.
Idle speed too low/high	IACV (Idle Air Control Valve) sticking
	Incorrect closed throttle position setting
	Mechanical fault with the throttle linkage
Actia tool malfunctions during tune download procedure	Low battery voltage
Throttle hang-up	Incorrect closed throttle position setting
	Low fuel pressure caused by loose fuel pipes to the fuel pump and filter.
	Low fuel pressure due to split fuel filter
Bike will start but cuts out immediately	IACV Stepper Motor stuck
	One way valve inside pipe from throttle bodies to IACV (Idle Air Control Valve) sticking
Abnormally high fuel pressure	Fuel pressure regulator inoperative.
Temperature gauge reads cooler than normal	Cooling system air-locked resulting in coolant temperature sensor operating in air instead of coolant.
Bike will start but cuts out immediately	IACV Stepper Motor stuck
Idle control air pipes whistling	Incorrect/poor fitment of pipes to the idle control housing
	Non-California models only: Connection of an air hose to a non-drilled port on the idle control housing.
Lack of engine performance	Incorrectly fitted airbox rubbers/poor airbox sealing at the throttle body

FUEL TANK

Fuel Tank Removal

WARNING: Observe the warning advice given in the general information section on the safe handling of fuel and fuel containers.

A fire, causing personal injury and damage to property could result from spilled fuel or fuel not handled or stored correctly.

1. Remove the seat and disconnect the battery negative (black) lead first.

2. Release the three fixings securing the fuel tank to the frame.

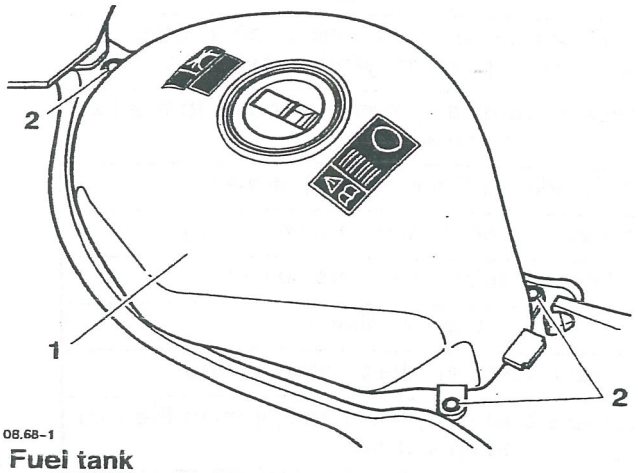

08.68-1

1. **Fuel tank**
2. **Fixings**

3. Carefully raise the fuel tank and disconnect the electrical connection to the fuel pump plate and both fuel hoses.

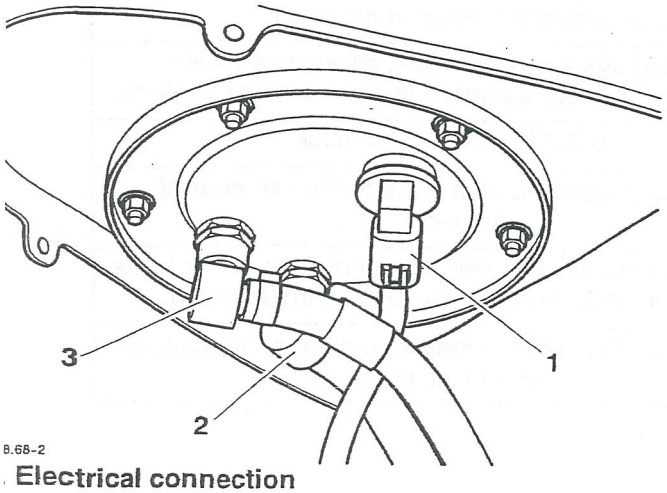

8.68-2

1. **Electrical connection**
2. **Fuel feed hose**
3. **Fuel return hose**

CAUTION: When raising the fuel tank to disconnect the fuel hoses etc., ensure that the painted surfaces of the tank are protected from contact with other adjacent surfaces.

Damage to the tank itself, and particularly the painted surface could result from inadequate care and/or protection.

NOTE:

- **Disconnect the fuel hoses by pressing the metal tag between the hose and socket inwards. Once released, the hoses will spring out from the socket.**

4. Disconnect the breather hose from the left hand side of the tank and, if fitted, the evaporative connection from the right hand side.

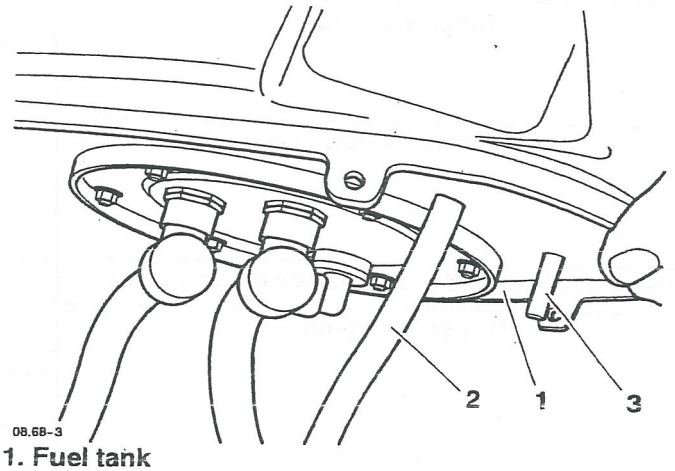

08.68-3

1. **Fuel tank**
2. **Breather hose**
3. **Evaporative connection**

NOTE:

- **The evaporative system is only fitted to models in the California market.**

5. The fuel tank can now be removed from the motorcycle.

CAUTION: When fitting the fuel tank and connecting the fuel hoses etc., ensure that the painted surfaces of the tank are protected from contact with other adjacent surfaces.

Damage to the tank itself, and particularly the painted surface could result from inadequate care and/or protection.

Installation

1. Position the fuel tank to the frame.
2. Connect the breather hose to the left hand side of the tank and, if fitted, the evaporative connection to the right.

CAUTION: When fitting the fuel hoses, ensure that the hoses are located to their connector squarely.

Fitting the hoses at an angle can damage the O ring which could cause a fuel leak.

NOTE:

- **The fuel feed and return hoses MUST be fitted to specific connectors on the fuel pump mounting plate.**
- **The fuel feed hose, which comes from the left hand side of the fuel rail, is fitted to the red coloured connector on the fuel pump mounting plate. The return hose, which comes from the right hand side of the fuel rail, is fitted to the white connector.**

Refit the fuel hoses to the fuel pump plate.

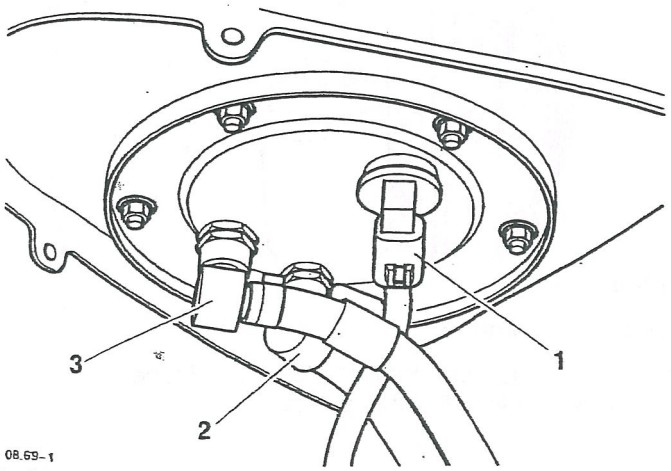

08.69-1

1. Electrical connection
2. Fuel feed hose/red connector
3. Fuel return hose/white connector

4. Refit the electrical connector to the fuel pump mounting plate.
5. Lower the fuel tank to the frame.
6. Align the fixing points and fit the three fixings. Tighten the fixings to **9 Nm.**

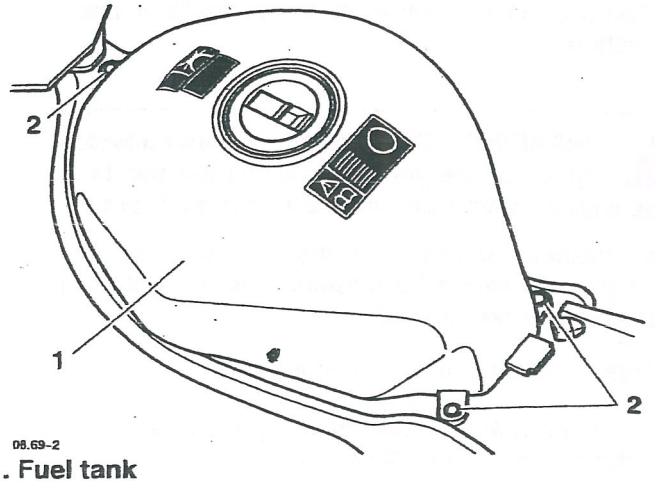

08.69-2

1. Fuel tank
2. Fixings

7. Reconnect the battery positive (red) lead first.
8. Refit the seat.

FUEL PUMP

Removal

1. Remove the seat and disconnect the battery negative (black) lead first.

2. Remove the fuel tank as described earlier in this section.

WARNING: Observe the warning advice given in the general information section on the safe handling of fuel and fuel containers.

A fire, causing personal injury and damage to property could result from spilled fuel or fuel not handled or stored correctly.

3. Drain all fuel into a suitable container.

4. Invert fuel tank and position on a protective surface to prevent paint damage.

5. Remove the lock nuts and washers securing the fuel pump mounting plate to the tank.

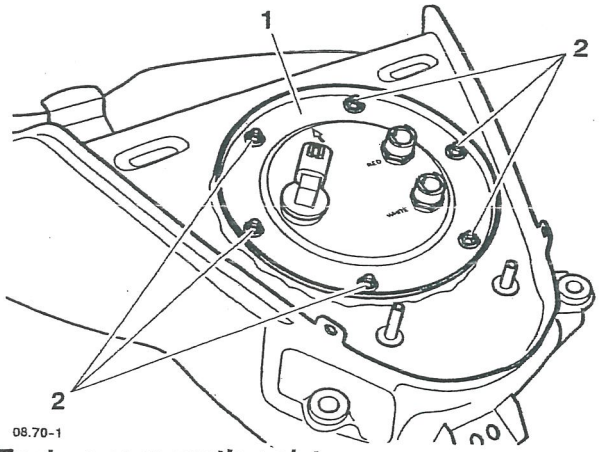

08.70-1

1. Fuel pump mounting plate

2. Fixings

6. Lift the fuel pump assembly and manoeuvre it from tank aperture.

7. Check the condition of mounting plate 'O'-ring seal in the tank aperture and only remove if necessary.

8. Disconnect the electrical connection to the fuel pump.

9. Disconnect the low fuel sender two-way multiplug

10. Remove the fixing from the pipe bracket.

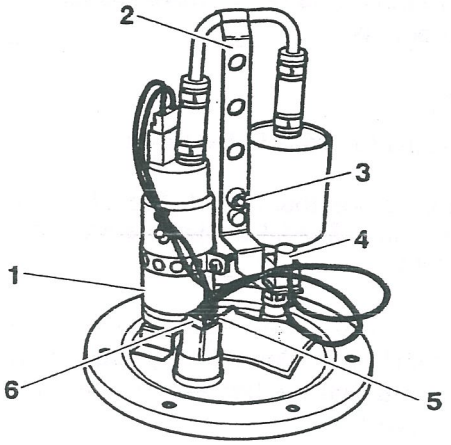

08.70-2

1. Fuel pump

2. Pipe bracket

3. Pipe bracket fixing

4. Low fuel level sender

5. Pump electrical connector

6. Low fuel level sender multiplug

11. Release the hose clips from the pump and filter. Remove the pipe bracket and hose assembly.

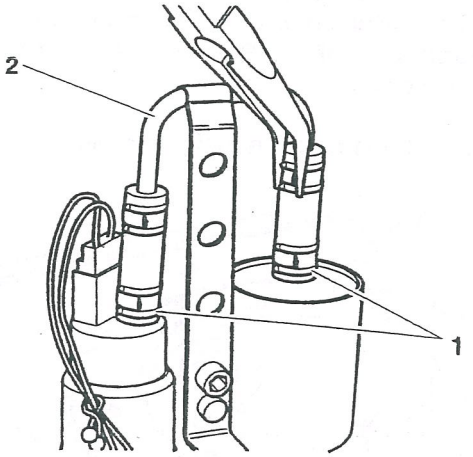

08.70-3

1. Hose clips

2. Bracket/hose assembly

12. Remove the fixing from the pump clamp, release the clamp and collect the fuel pump.

Assembly

1. Position the fuel pump to the bracket. Refit the clamp and fixing then tighten to **4 Nm.**
2. Position the pipe bracket and hose assembly to the fuel pump and filter and fully locate the hoses onto their respective mounting points.
3. Secure the pipe bracket with the fixing.
4. Position the hose clips to ensure that both hoses are correctly retained.

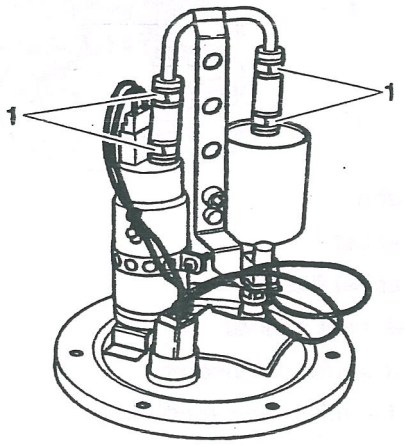

08.71-1

1. Hose clips (correctly positioned)

5. Connect the multiplug connector to the fuel pump and ensure that it is secure.
6. Reconnect the low fuel level sender two-way multiplug.
7. If removed, position a new 'O'-ring seal in the tank aperture and ensure that it is correctly seated.
8. Carefully manoeuvre fuel pump assembly into tank aperture and ensure that the 'FRONT' arrow is facing towards the front of the tank.
9. Locate the washers and lock nuts to the studs and tighten sequentially to **5 Nm.**
10. Refit the fuel tank as described earlier in this section.
11. Check integrity of all fuel system pipes and connections.
12. Reconnect the battery positive (red) lead first.
13. Refit the seat.

FUEL PRESSURE CHECKING

Using Triumph service tool T3880048, allows diagnos of fuel pump, fuel pressure relief valve and hose relate problems without first removing the compone concerned.

Test Procedure

1. In order to connect the gauge, turn the ignition to the OFF position and raise the fuel tank.

> **CAUTION: Never turn the ignition on with either fuel hose disconnected as this will by-pass the fuel pressure regulator and cause excess pressure in the system.**

2. Disconnect the fuel feed hose from the red connector on the fuel pump mounting plate.
3. Connect the gauge between the detached hose and the fuel pump mounting plate.

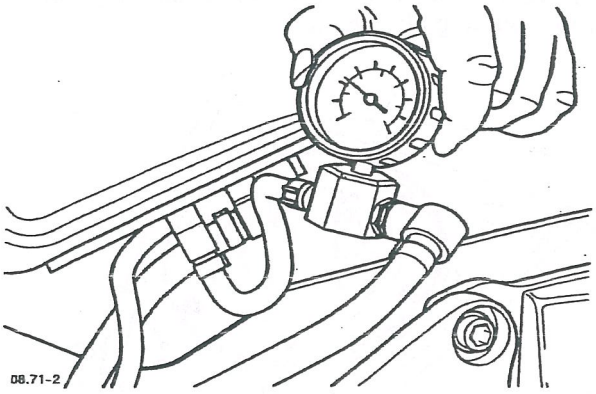

08.71-2

Checking fuel pressure

4. Start the engine and check the gauge reading.

NOTE:

- **If correct, the fuel pressure should be 3.0 Bar +/- 0.25 Bar.**
- **If a higher or lower fuel pressure reading is shown on the gauge, refer to the non-electrica diagnosis table earlier in this section.**

FUEL FILTER

Removal

1. Remove the seat and disconnect the battery negative (black) lead first.

2. Remove the fuel tank as described earlier in this section.

WARNING: Observe the warning advice given in the general information section on the safe handling of fuel and fuel containers.

A fire, causing personal injury and damage to property could result from spilled fuel or fuel not handled or stored correctly.

3. Drain all fuel into a suitable container.

4. Invert fuel tank and position on a protective surface to prevent paint damage.

5. Remove the lock nuts and washers securing fuel pump mounting plate to tank.

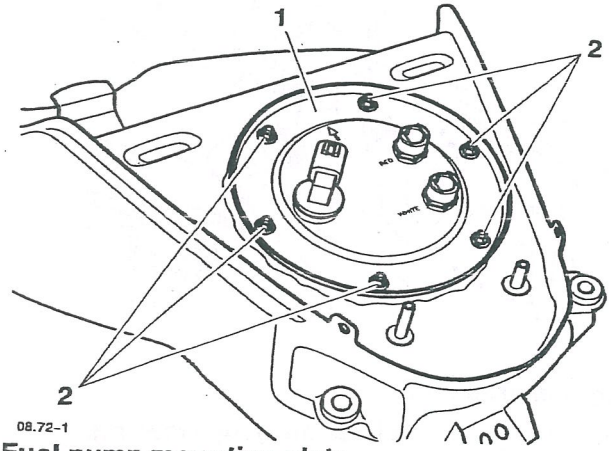

08.72-1

1. Fuel pump mounting plate

2. Fixings

6. Lift fuel pump assembly and manoeuvre from the tank aperture.

7. Check the condition of the mounting plate 'O'-ring seal in the tank aperture and only remove if necessary.

8. Disconnect the low fuel level sender two-way multiplug.

9. Remove the fixing from the pipe bracket.

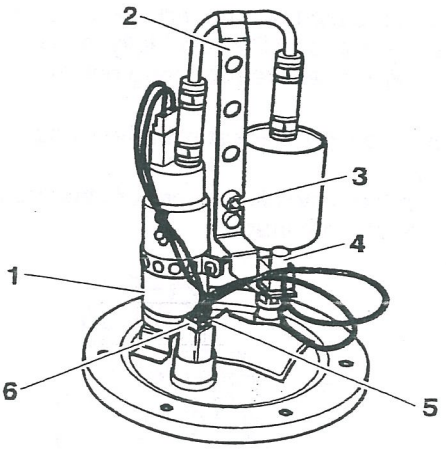

08.72-2

1. Fuel pump

2. Pipe bracket

3. Pipe bracket fixings

4. Low fuel level sender

5. Pump electrical connector

6. Low fuel level sender multiplug

10. Release the hose clips from the pump and filter and remove pipe bracket and hose assembly.

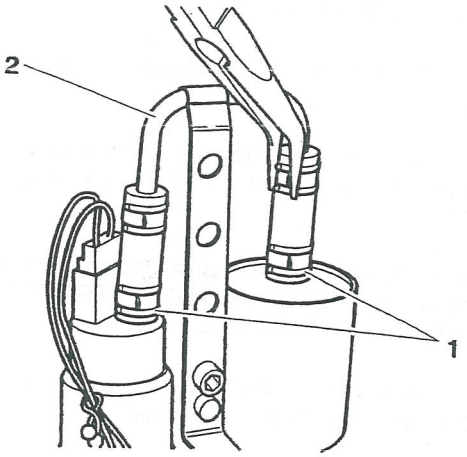

08.72-3

1. Hose clips

2. Bracket/hose assembly

11. Release the clip from the exit side of the filter and detach the filter from the exit hose.

Assembly

1. Position the filter to the exit hose ensuring that the arrow on the filter casing is pointing in a downward direction (i.e. into the exit hose).

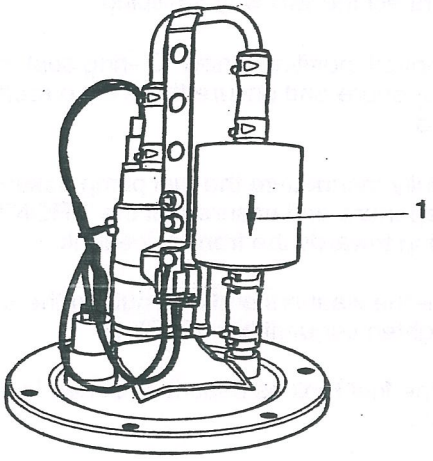

08.73-1

1. Arrow

2. Position the pipe bracket and hose assembly to the fuel pump and filter and fully locate the hoses onto their respective mounting points.
3. Secure the pipe bracket with the fixing.
4. Position the hose clips to ensure that all hoses are correctly retained.
5. Reconnect the low fuel level sender two-way multiplug.
6. If removed, position a new O-ring seal in the tank aperture and ensure that it is correctly seated.
7. Carefully manoeuvre the fuel pump assembly into the tank aperture and ensure that the 'FRONT' arrow is facing towards the front of the tank.
8. Locate the washers and lock nuts to the studs and tighten sequentially to **5 Nm.**
9. Refit the fuel tank as described earlier in this section.
10. Check integrity of all fuel system pipes and connections.
11. Reconnect the battery positive (red) lead first.
12. Refit the seat.

LOW FUEL LEVEL SENDER

Removal

1. Remove the seat and disconnect the battery negative (black) lead first.
2. Remove the fuel tank as described earlier in this section.

> **WARNING: Observe the warning advice given in the general information section on the safe handling of fuel and fuel containers.**
>
> **A fire, causing personal injury and damage to property could result from spilled fuel or fuel not handled or stored correctly.**

3. Drain all fuel into a suitable container.
4. Invert the fuel tank and position on a protective surface to prevent paint damage.
5. Remove the lock nuts and washers securing the fuel pump mounting plate to tank.

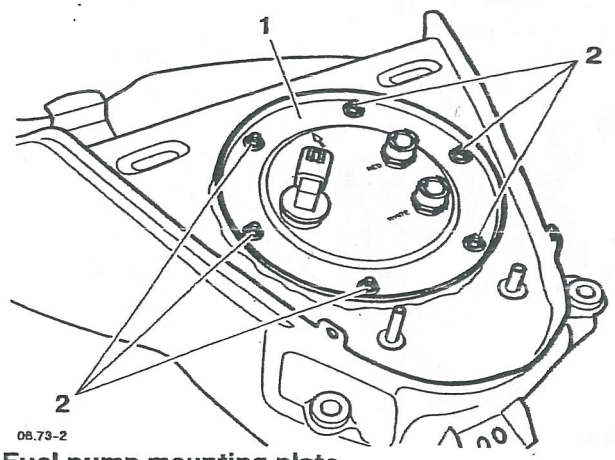

08.73-2

1. Fuel pump mounting plate

2. Fixings

6. Lift the fuel pump assembly and manoeuvre from the tank aperture.
7. Check the condition of the mounting plate O-ring seal in the tank aperture and only remove if necessary.

8. Disconnect the low fuel level sender two-way multiplug.

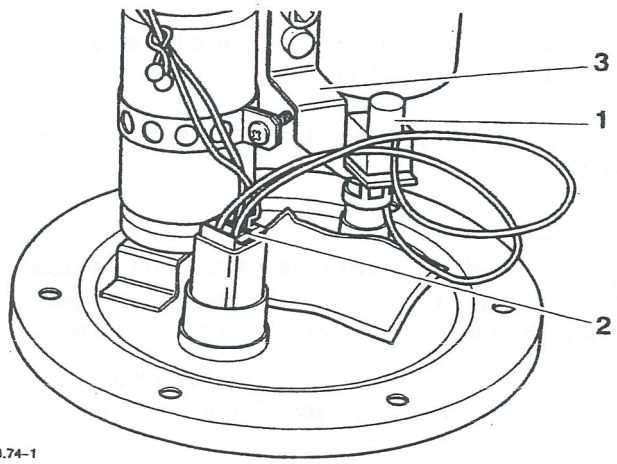

08.74-1

1. Low fuel level sender

2. Multiplug

3. Pipe bracket

9. Release the sender by squeezing together, the two barbs on the plastic holder.

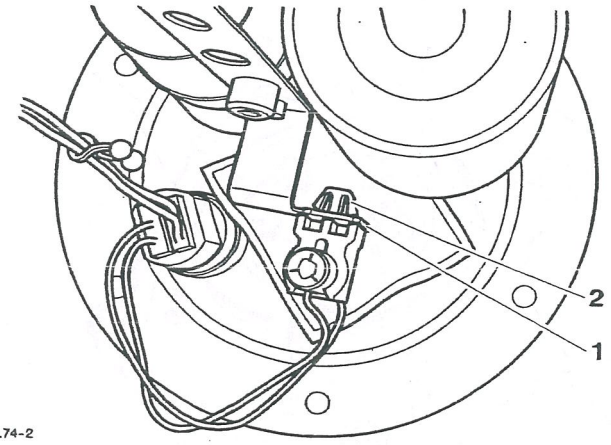

08.74-2

1. Mounting

2. Barbs

Assembly

1. Position sender to the bracket. Push the barb through the bracket until secure.
2. Reconnect the two-way multiplug.
3. If removed, position a new 'O'-ring seal in the tank aperture and ensure that it is correctly seated.
4. Carefully manoeuvre the fuel pump assembly into tank aperture and ensure that the 'FRONT' arrow is facing towards the front of the tank.
5. Locate the washers and lock nuts to the studs and tighten sequentially to **5 Nm.**
6. Refit the fuel tank as described earlier in this section.
7. Check integrity of all fuel system pipes and connections.
8. Reconnect the battery positive (red) lead first.
9. Refit the seat.

AIRBOX

Removal

1. Remove the seat and disconnect the battery negative (black) lead first.
2. Remove the fuel tank as described earlier in this section.
3. Release the strap securing the airbox to the fuel rail.

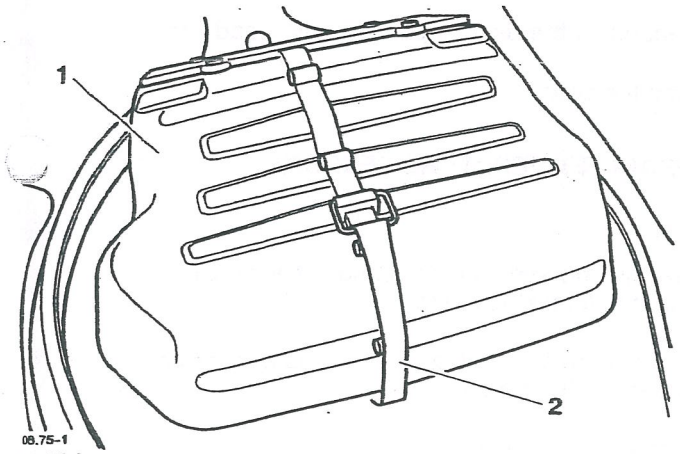

1. Airbox

2. Strap

NOTE:

- **Prior to disconnection, note the location of each hose attached to the underside of the airbox.**

4. Disconnect the hoses from the underside of the air box.

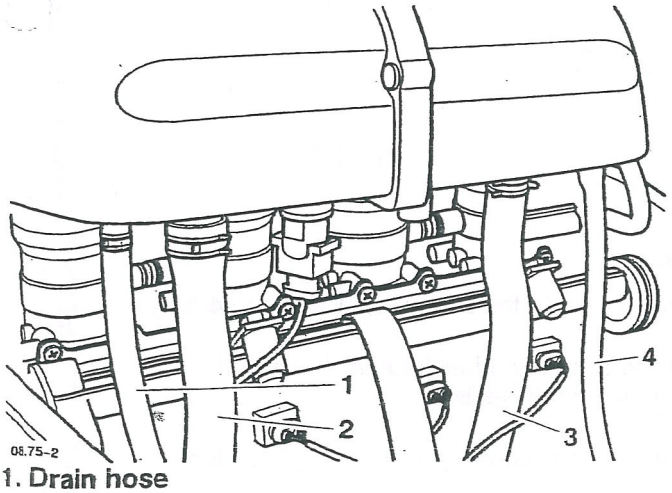

1. Drain hose

2. Idle air control valve hose

3. Breather hose

)ose to fuel pressure regulator and ECM

NOTE:

- **On California models, an additional hose for the secondary air injection system will be fitted between the idle control valve and breather hoses.**

5. Raise the airbox from the throttle bodies and disconnect the multiplug to the air temperature sensor.

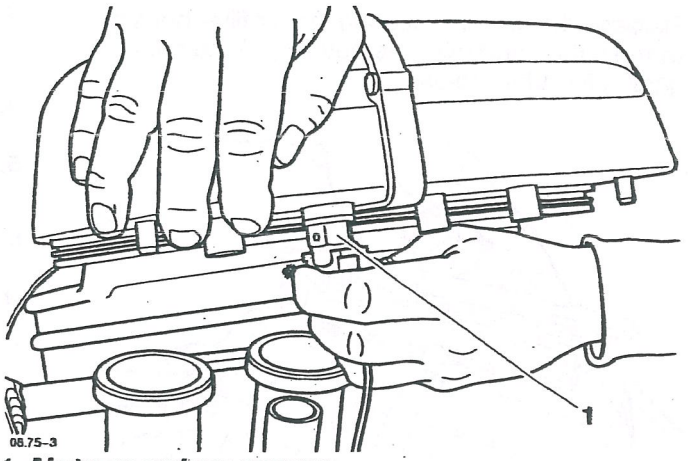

1. Air temperature sensor

6. Detach the airbox assembly from the intake ducts and remove from the motorcycle.

Installation

1. Locate the airbox assembly to the motorcycle and connect the air temperature sensor.
2. Position the airbox to the throttle bodies and push fully home.
3. Reconnect all hoses to the under side of the airbox.
4. Secure the assembly with the retaining strap (use the second hook position if insecure due to stretching of the strap).

AIR FILTER

Removal

1. Remove the seat and disconnect the battery negative (black) lead first.
2. Remove the fuel tank as described elsewhere in this section.
3. Release the screws securing the air filter housing to the airbox and raise the housing. Retain the gasket for future re-use.

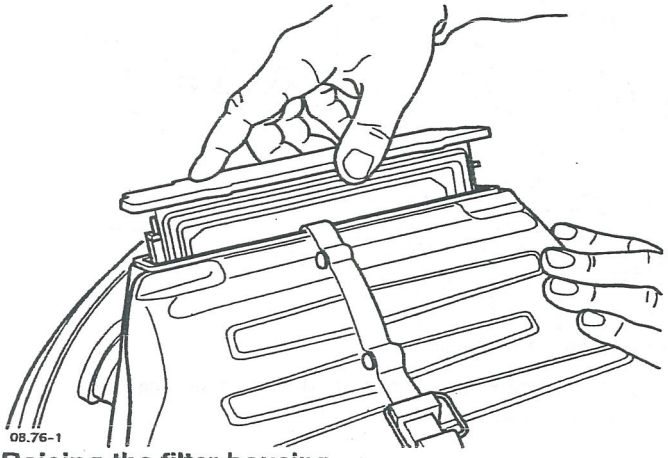

Raising the filter housing

4. Detach the air filter element from the housing.

NOTE:

- **Note the orientation of the element before final detachment. The replacement item must be assembled in the same orientation.**

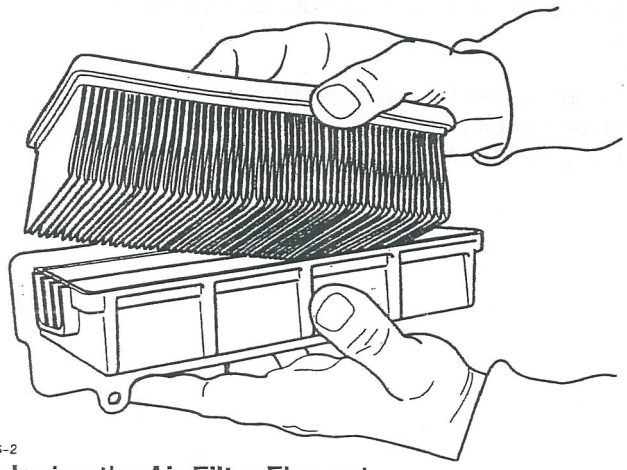

eplacing the Air Filter Element

Assembly

1. Clean the air filter housing and locate the new filter element in the same orientation noted during removal.
2. Locate the housing to the airbox ensuring the gasket is correctly positioned. Tighten the screws.
3. Refit the fuel tank as described elsewhere in this section.
4. Reconnect the battery, positive (red) lead first.
5. Refit the seat.

INTAKE AIR TEMPERATURE SENSOR

Removal

1. Remove the seat and disconnect the battery negative (black) lead first.
2. Remove the fuel tank and airbox as described earlier in this section.
3. Unscrew the sensor.

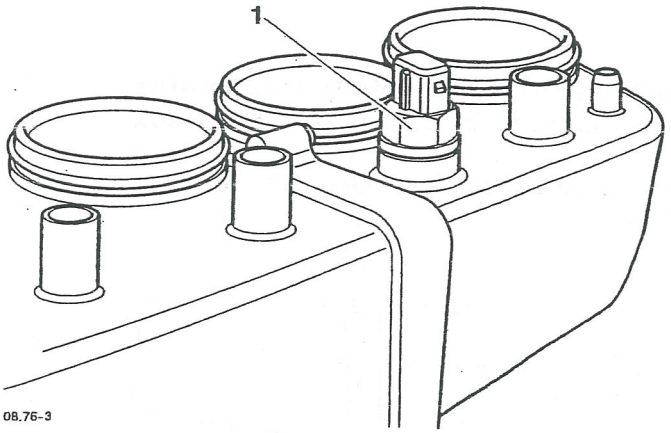

1. Sensor

Installation

1. Fit the sensor to the airbox and tighten to **4 Nm.**
2. Refit the airbox and fuel tank as described elsewhere in this section.
3. Reconnect the battery, positive (red) lead first.
4. Refit the seat.

CRANKSHAFT POSITION SENSOR

Removal

NOTE:

- **The air gap for the crankshaft position sensor is not adjustable.**

1. Remove the seat and disconnect the battery negative (black) lead first.
2. Remove the left hand lower fairing as described in the body section.
3. Remove the fixing securing the sensor bracket to the crankcase.

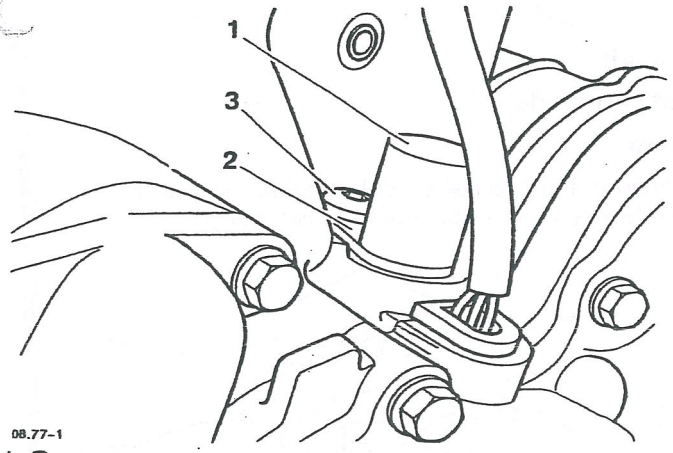

08.77-1

1. **Sensor**
2. **Sensor bracket**
3. **Sensor bracket fixing**

4. Disconnect the sensor multi-plug.
5. Remove the sensor from the crankcase.

Installation

1. Check the sensor O ring for damage or deterioration. Renew as necessary.

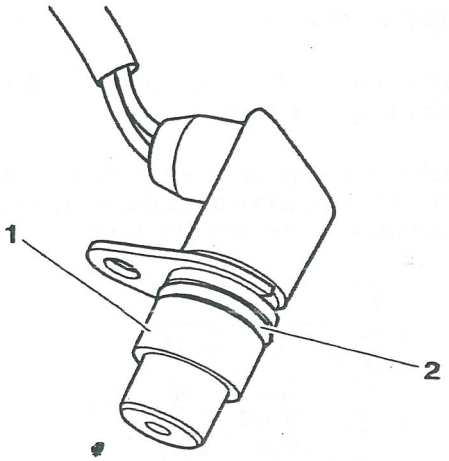

08.77-2

1. **Sensor**
2. **O ring**

2. Apply a smear of oil to the sensor O ring to aid assembly.
3. Refit the sensor taking care not to damage the O ring.
4. Refit the sensor bracket. Fit and tighten the fixing to **10 Nm.**
5. Reconnect the sensor multi-plug.

THROTTLE CABLE

Removal

1. Remove the seat and disconnect the battery negative (black) lead first.

2. Remove the fuel tank and airbox as described earlier in this section.

3. Slacken the adjuster locknut at the throttle body such that it will allow the outer cable to be detached from the cable bracket.

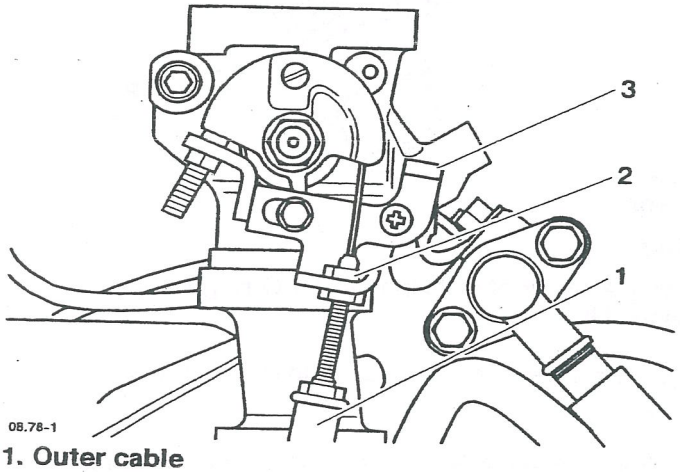

1. Outer cable

2. Adjuster locknut

3. Cable bracket

4. Detach the inner cable from the throttle cam.

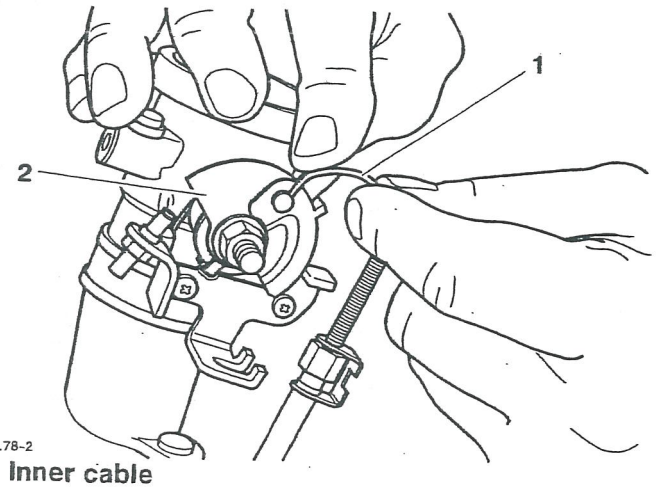

Inner cable

Throttle cam

5. At the twist grip end, slide off the rubber boot and release the screws which secure the two halves of the twist grip guide to each other.

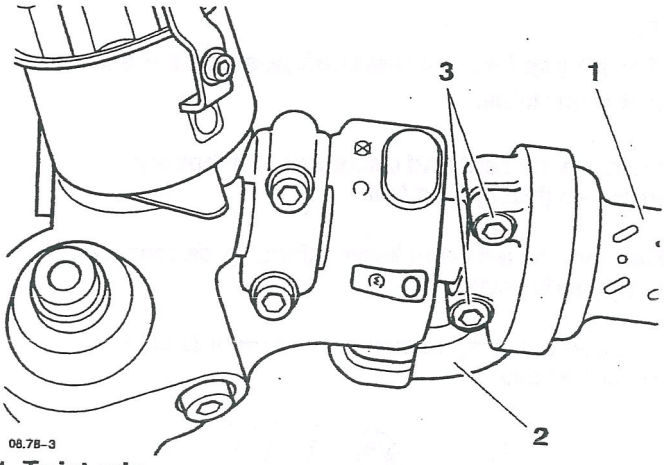

1. Twist grip

2. Twist grip guide

3. Screws

6. Separate the two halves of the guide. Release the throttle inner cable from the twist grip.

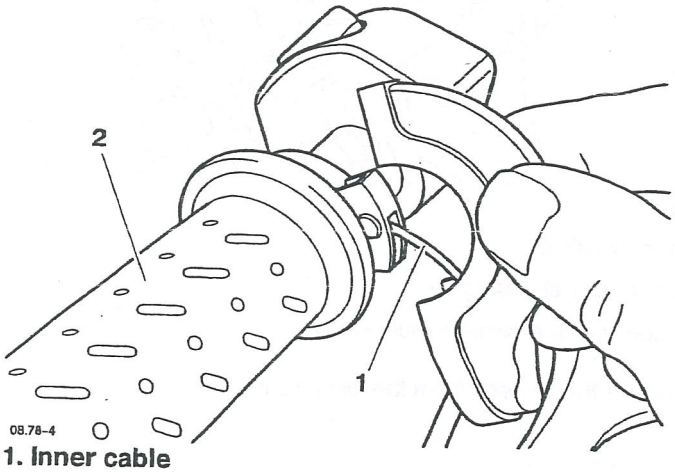

1. Inner cable

2. Twist grip

7. Note the routing of the throttle cable and remove from the frame.

Examination

1. Check that the throttle cable operates smoothly, without sticking or binding. Replace the cable if there is any doubt as to its correct operation.

Installation

1. Locate the cable to the frame following the routing noted during removal.
2. Engage the inner cable nipple to the twist grip.
3. Assemble the two halves of the cable guide ensuring that the outer cable is correctly located in the guide.

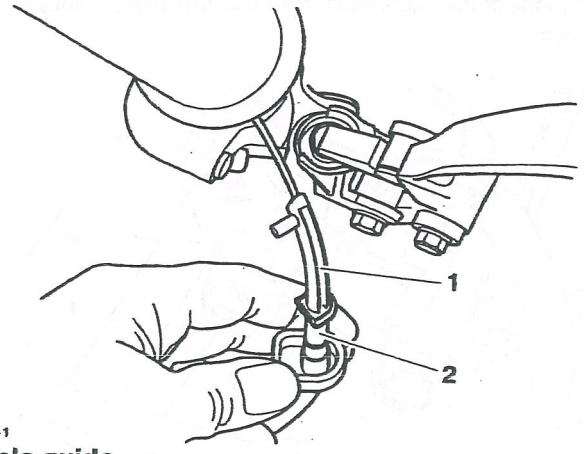

1. Cable guide

2. Outer cable

4. Refit the boot to the cable guide.
5. Attach the other end of the inner cable to the throttle cam and locate the outer cable to the cable bracket. Fit the cable locknut.
6. Set the cable adjustment using the following adjustment instructions:

WARNING: Operation of the motorcycle with an incorrectly adjusted, incorrectly routed or damaged throttle cable could interfere with the operation of the brakes, clutch or the throttle itself. Any of these conditions could result in loss of control of the motorcycle and an accident.

WARNING: Move the handlebars to left and right full lock while checking that cables and harnesses do not bind. A cable or harness which binds will restrict the steering and may cause loss of control and an accident.

Throttle cable adjustment

1. When correctly set, the throttle must have 2-3 mm of free-play at the throttle twist grip. If there is more or less than 2-3 mm of free-play present, the throttle cable must be adjusted.

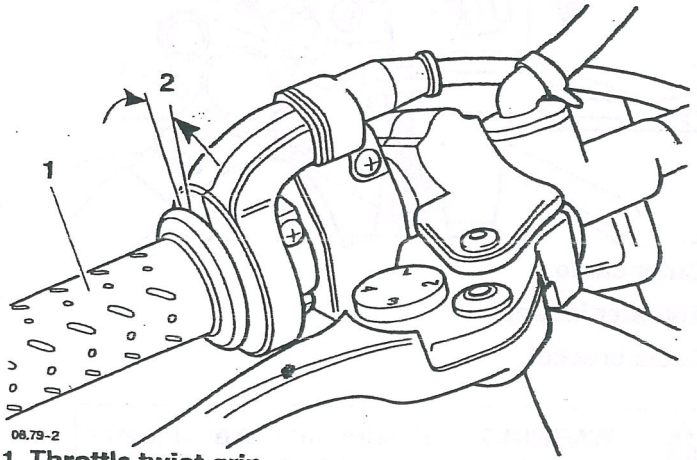

1. Throttle twist grip

2. 2-3 mm

NOTE:

- **Minor adjustments can be made using the adjuster near the twist grip end of the throttle. Where a correct setting cannot be achieved in this way, the adjuster at the throttle body end must be used.**

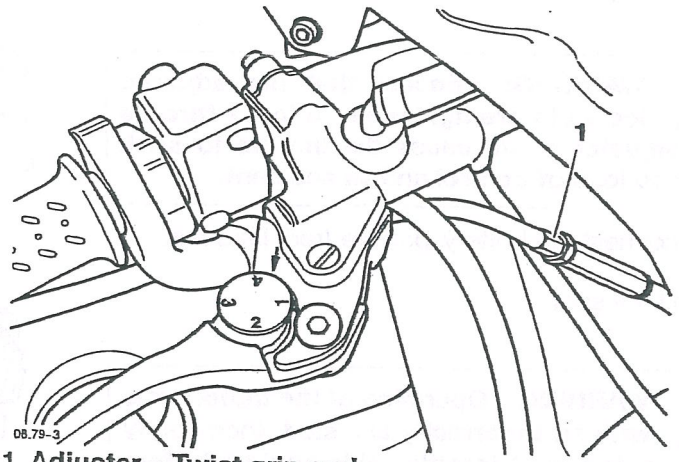

1. Adjuster - Twist grip end

2. Set the cable adjuster near the twist grip end such that it has an equal amount of adjustment in each direction.
3. Set the adjuster at the throttle body end of the cable to give 2-3mm of play at the twist grip. Tighten the locknut.

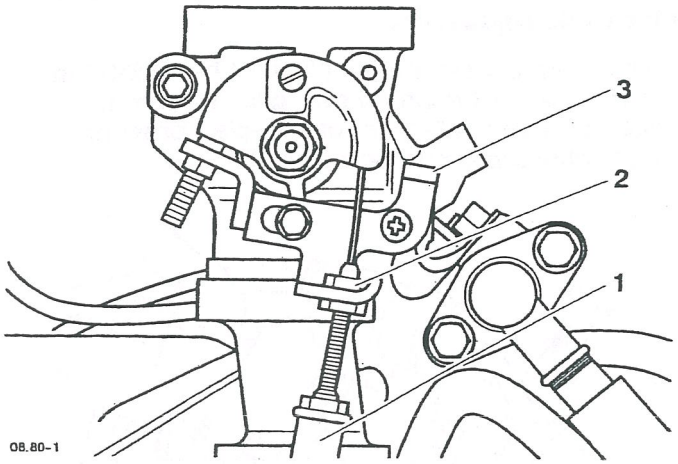

1. Outer cable

2. Adjuster locknut

3. Cable bracket

WARNING: Ensure that the adjuster locknuts are tightened. A loose throttle cable adjuster could cause the throttle to stick leading to loss of control and an accident.

4. Refit the airbox and fuel tank as described earlier in this section.

5. Make any minor adjustments as necessary to give 2-3 mm of play using the adjuster near the twist grip end of the cable. Tighten the locknut.

WARNING: Ensure that the adjuster locknuts are tightened. A loose throttle cable adjuster could cause the throttle to stick leading to loss of control and an accident.

6. Reconnect the battery, positive (red) lead first.

7. Refit the seat.

WARNING: Operation of the motorcycle with an incorrectly adjusted, incorrectly routed or damaged throttle cable could interfere with the operation of the brakes, clutch or the throttle itself. Any of these conditions could result in loss of control of the motorcycle and an accident.

WARNING: Move the handlebars to left and right full lock while checking that cables and harnesses do not bind. A cable or harness which binds will restrict the steering and may cause loss of control and an accident.

THROTTLE BODY ASSEMBLY

Removal

1. Remove the seat and disconnect the battery negative (black) lead first.

2. Remove the fuel tank and airbox as described earlier in this section.

3. Remove the fuel rail as described elsewhere in this section.

4. Disconnect throttle cable from throttle linkage as described elsewhere in this section.

5. Disconnect the multiplug from the throttle position sensor.

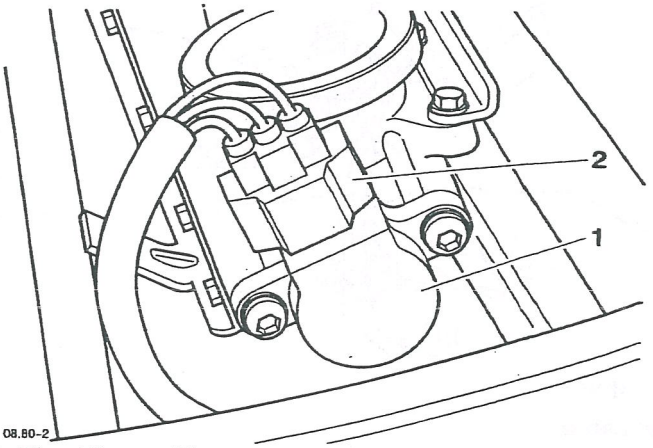

1. Throttle position sensor

2. Multiplug

6. Loosen the clamps and remove the throttle body assembly from the transition pieces.

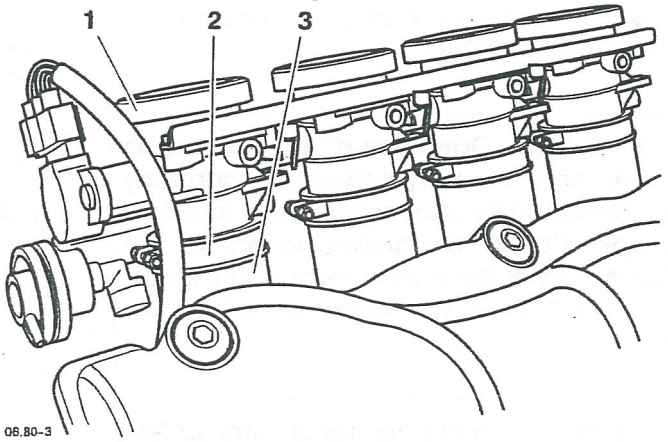

1. Throttle body assembly

2. Clamps

3. Transition pieces

7. Release the air by-pass hoses from the transition pieces.

8. Remove the screws securing each transition piece to the cylinder head.

9. Remove the transition pieces and discard the 'O'-ring seals.

10. Cover the inlet ports to prevent the ingress of dirt and other objects.

Installation

1. Remove the covers from the inlet ports and ensure that the mating faces are clean.

2. Locate new 'O'-ring seals to the transition pieces.

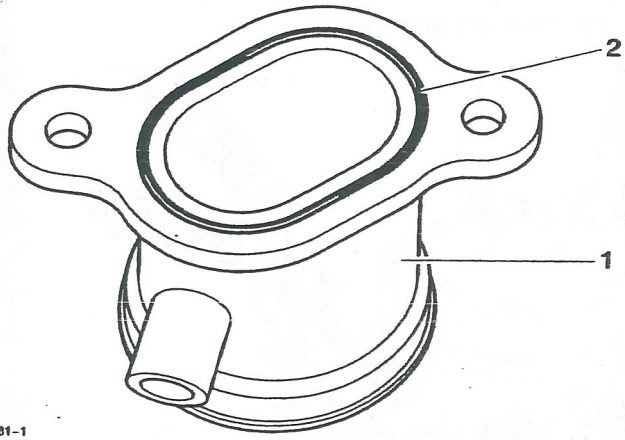

1. Transition piece

2. 'O' ring

3. Position each transition piece to the cylinder head and secure with the Torx screws. Tighten the screws to **12 Nm.**

4. Refit the air bypass hoses.

5. Position the throttle body assembly and push each throttle body into its respective transition piece. Ensure that each throttle body is fully seated and tighten the clamps.

6. Refit the fuel rail as described elsewhere in this section.

7. Connect the multiplug to the throttle position sensor.

8. Connect the throttle cable as described elsewhere in this section and adjust as follows.

a. When correctly set, the throttle must have 2-3 mm of free-play at the throttle twist grip. If there is more or less than 2-3 mm of free-play present, the throttle cable must be adjusted.

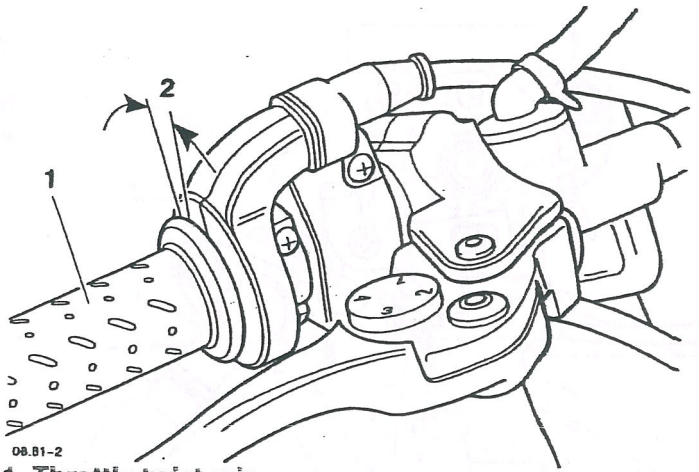

1. Throttle twist grip

2. 2-3 mm

NOTE:

- **Minor adjustments can be made using the adjuster near the twist grip end of the throttle. Where a correct setting cannot be achieved in this way, the adjuster at the throttle body end must be used.**

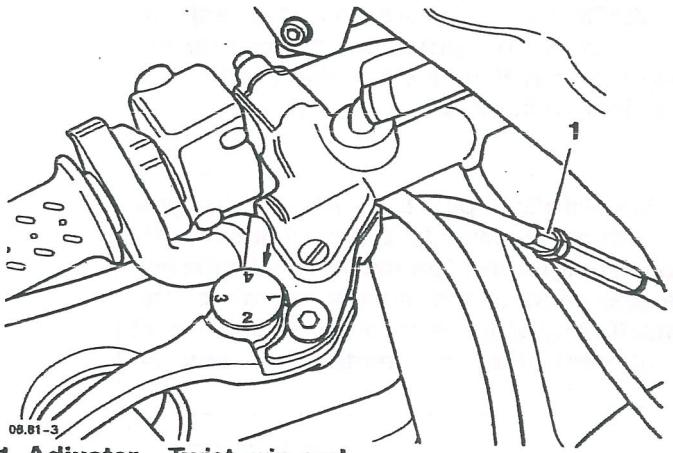

1. Adjuster - Twist grip end

b. Set the cable adjuster at the twist grip end such that it has an equal amount of adjustment in each direction.

c. Set the adjuster at the throttle body end of the cable to give 2-3mm of play at the twist grip. Tighten the locknut.

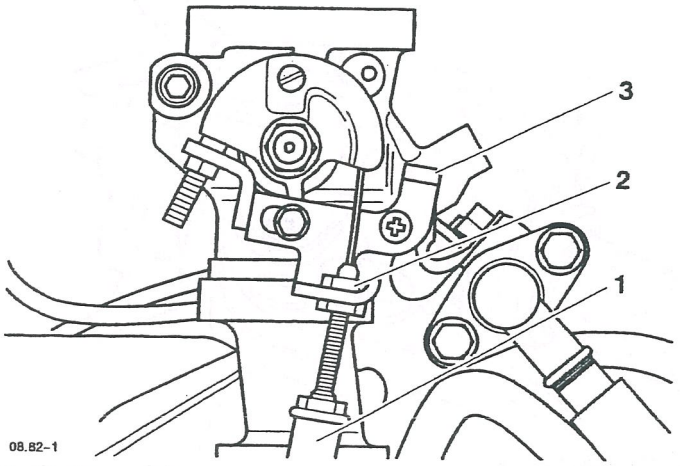

1. Outer cable

2. Adjuster locknut

3. Cable bracket

d. Make any minor adjustments as necessary to give 2-3 mm of play using the adjuster near the twist grip end of the cable. Tighten the locknut.

WARNING: Ensure that the adjuster locknuts are tightened. A loose throttle cable adjuster could cause the throttle to stick leading to loss of control and an accident.

WARNING: Operation of the motorcycle with an incorrectly adjusted, incorrectly routed or damaged throttle cable could interfere with the operation of the brakes, clutch or the throttle itself. Any of these conditions could result in loss of control of the motorcycle and an accident.

WARNING: Move the handlebars to left and right full lock while checking that cables and harnesses do not bind. A cable or harness which binds will restrict the steering and may cause loss of control and an accident.

Refit the airbox and fuel tank as described earlier in this section.

). Reconnect the battery, positive (red) lead first.

. Refit the seat.

THROTTLE BODY BALANCING

NOTE:

- **In order to accurately balance the throttle bodies, Triumph recommend the use of the *Souriau Indiana* digital inlet vacuum analyser or another similar device. Although mercury columns or analogue gauges will allow balancing of the throttle bodies, use of a digital meter will allow a more accurate balance to be achieved.**

1. Remove the fuel tank and airbox as described elsewhere in this section.

2. Disconnect the air bleed hoses from the ports on the idle control valve and insert suitable 'T' pieces between the hoses and valve.

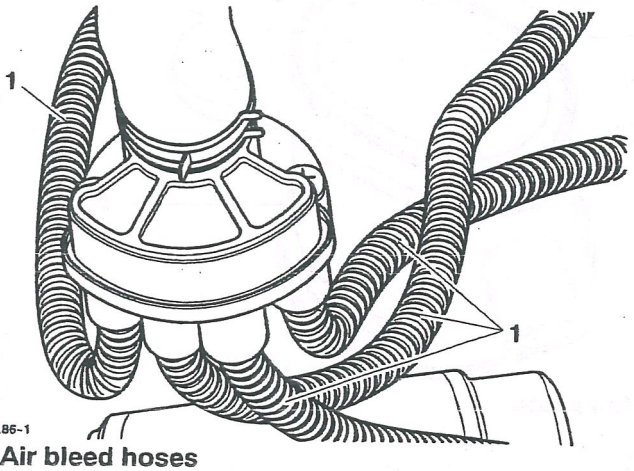

1. Air bleed hoses

3. Attach the analyser hoses to the 'T' pieces.

4. Position the analyser in a position that it can be easily read and attach the hoses to the idle air control ports on the transition pieces.

WARNING: If the engine has recently been running, the components beneath the fuel tank cover may be hot to the touch.

Contact with the hot components may cause damage to exposed skin. To avoid skin damage, always allow the hot parts to cool before hose disconnection/connection.

NOTE:

- **The hose connections on the tool are marked 1, 2, 3 & 4 denoting which cylinder they should be connected to. When connecting the hoses to the throttles, ensure that hose 1 is connected to cylinder number one etc. Cylinder 1 is on the left hand side of the motorcycle.**

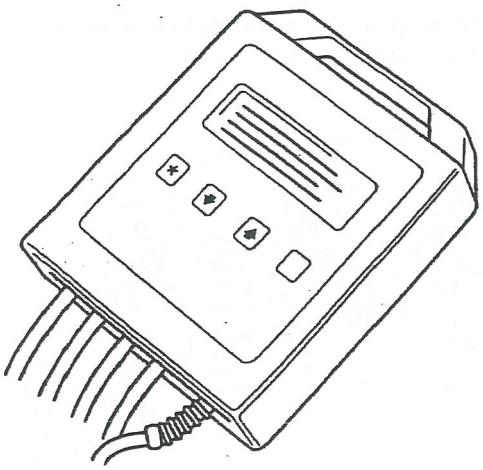

08.82-2

Typical analyser display

Temporarily refit the fuel tank and reconnect the fuel hoses and fuel pump connection.

NOTE:

- **A fuel hose and extension lead kit is available from Triumph to allow remote connection of the fuel tank. Order part numbers T3880124 and T3880127.**

6. Attach an exhaust extraction hoses to the silencer.

7. Start the engine.

NOTE:

- **Throughout the balancing procedure, it will be necessary to open the throttle slightly to prevent the engine from stalling. This is because the idle air control system has been disconnected to allow attachment of the analyser hoses.**

8. Using the throttle twist grip, hold the engine speed at approximately 1100 RPM.

9. Select the bar chart display on the analyser and assess which cylinders require adjustment.

NOTE:

- **The left hand (number 1) cylinder is non-adjustable. All other cylinders are adjusted to match the setting of number 1 cylinder, though it should be noted that adjustment of any cylinder will marginally affect the setting of the other three.**

10. Keeping the engine speed at around 1100 rpm, set both adjusters such that all four throttle bodies have an equal vacuum reading.

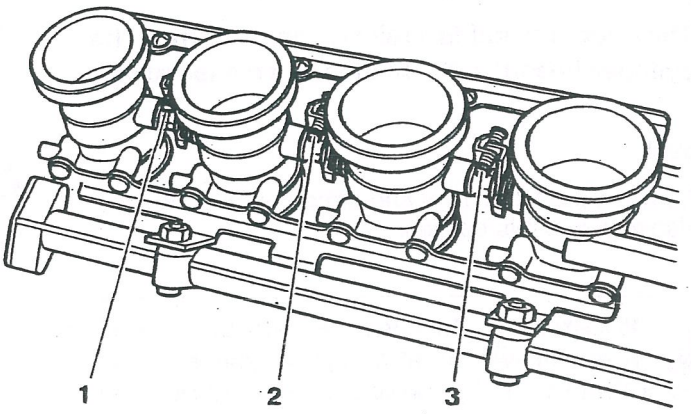

08.83-3

1. Adjuster - number 2 cylinder

2. Adjuster - number 3 cylinder

3. Adjuster - number 4 cylinder

11. Connect the Triumph diagnostic tool. Scroll to "SENSOR DATA" and check the read-out for IACV stepper position.

12. If the read-out is in the range 25-35 steps, no further adjustment is needed. If the value is outside this range, make equal adjustment on all three throttle adjusters to bring the IACV read-out to within 25-35 steps.

13. Check the throttle balance and readjust if necessary (subject to maintaining the IACV in the 25-35 step range).

14. Stop the engine.

15. Disconnect the fuel tank.

16. Remove the analyser hoses and 'T' pieces. Reconnect the idle air control hoses.

17. Refit the air box and fuel tank as described earlier in this section.

18. Start the engine and check that the idle speed is in the range 1100 $\pm$ 50 rpm.

NOTE:

- **If the idle speed now falls outside the above range, adjust the closed throttle position using the Triumph service diagnostic tool. Refer to the tool's operating instructions for details.**

INJECTORS/FUEL RAIL/FUEL PRESSURE REGULATOR

NOTE:

- **The injectors and fuel rail are removed from the cylinder head/throttle bodies as an assembly.**

Removal

1. Remove seat, fuel tank and airbox as described elsewhere in this section.

WARNING: Because fuel stored in the fuel rail will be at 3 bar pressure, it is essential that the fuel pressure is reduced before any dismantling of the throttle bodies takes place.

If the throttle bodies are dismantled without first reducing fuel pressure, pressurised fuel may escape causing clothing and components to be coated with fuel.

This would represent a serious fire hazard which could lead to burn injuries and damage to property.

. Move the gearchange to neutral and crank the engine briefly to reduce fuel pressure in the fuel rail.

Disconnect the battery negative (black) lead first.

OTE:

To release an injector connector, press the wire retainer inwards.

Remove the connectors from the four fuel injectors.

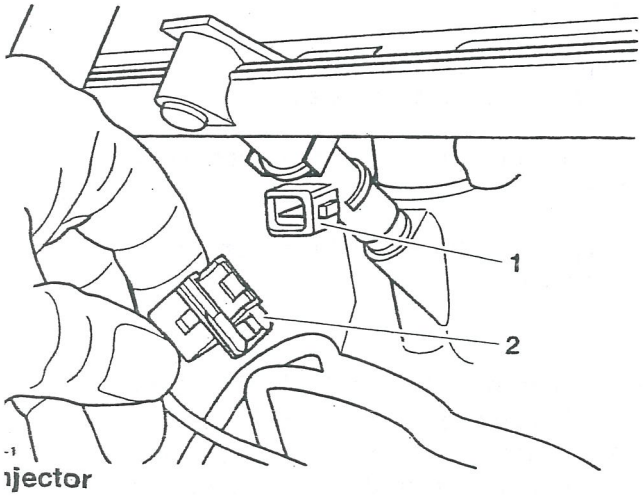

-1
njector

onnector

5. Remove the two screws securing the fuel rail to the throttle body assembly.

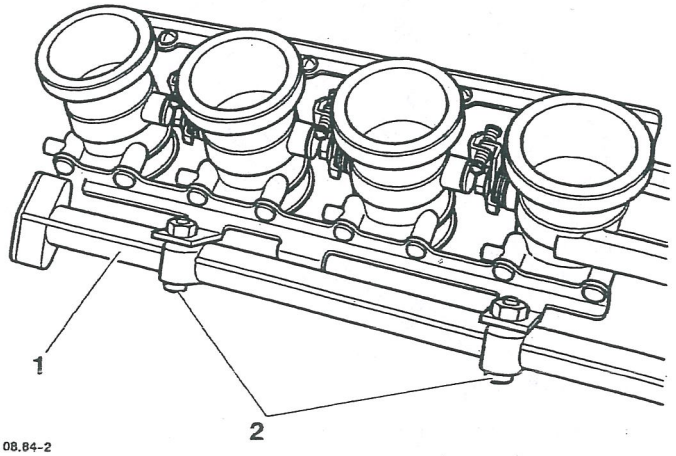

08.84-2

1. Fuel rail

2. Screws

6. Carefully pull fuel rail upwards to release the injectors from the cylinder head.

Disassembly

1. Release the clips and remove the fuel injectors from the fuel rail.

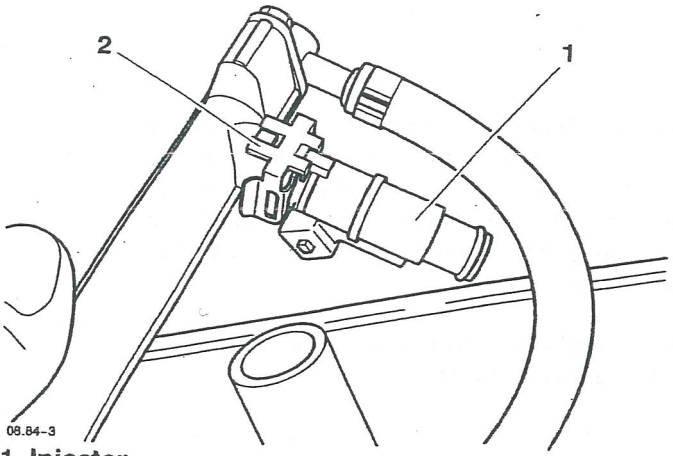

08.84-3

1. Injector

2. Clip

2. Remove spring clip from fuel rail and detach the fuel pressure regulator.

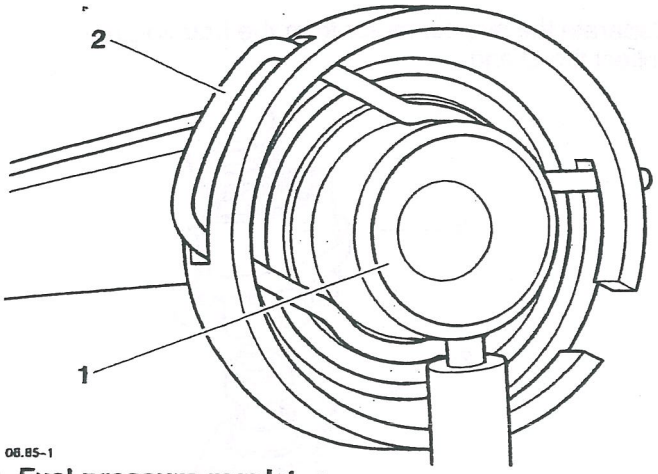

08.85-1

1. Fuel pressure regulator

2 Spring clip

Assembly

1. Ensure the pressure regulator and mating bore are clean. Position pressure regulator to the fuel rail and secure with spring clip.

2. Position the fuel injectors to the fuel rail and secure with the clips.

Installation

1. Carefully position fuel rail and injectors and push home. Ensure each injector is fully seated in its bore.

2. Secure the fuel rail to the throttle body assembly and tighten to **12 Nm.**

3. Refit the multiplugs to each injector.

4. Refit the air box and fuel tank as described earlier in this section.

5. Reconnect the battery, positive (red) lead first.

6. Refit the seat.

IDLE AIR CONTROL VALVE

Removal

1. Remove the seat and disconnect the battery negative (black) lead first.
2. Remove fuel tank and airbox as described elsewhere in this section.
3. Mark the position of each air pipe in relation to the idle air control valve housing.

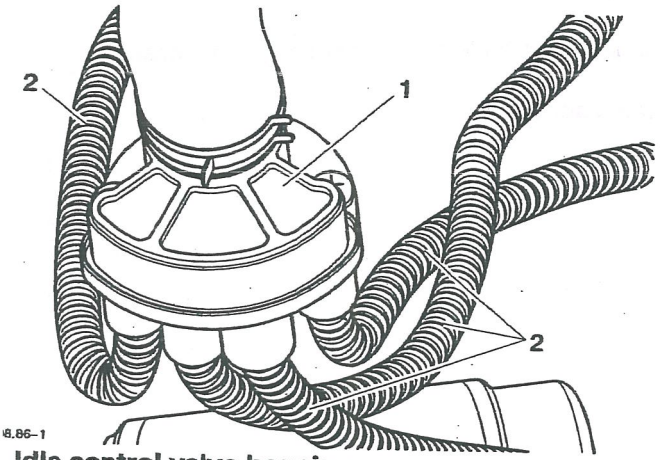

8.86-1

Idle control valve housing

Air pipes

Detach the air pipes.

Release the fixings securing the idle control housing to the bracket.

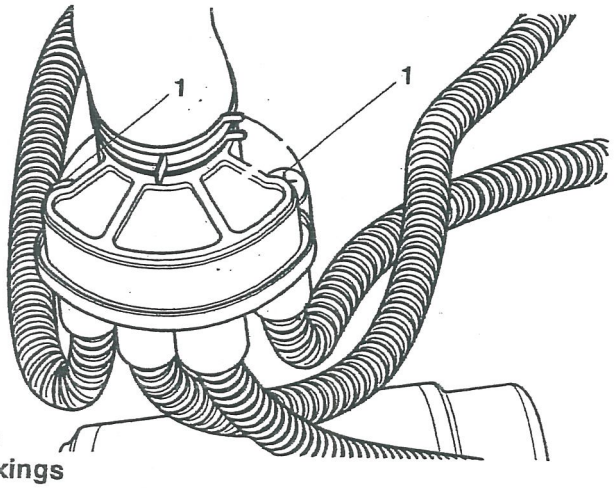

5-1

Fixings

6. Separate the stepper motor from the housing and collect the O ring.

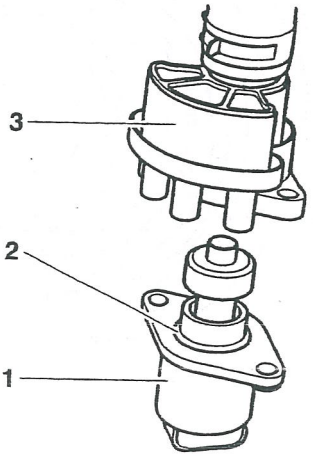

08.86-3

1. Stepper motor

2. 'O' ring

3. Housing

Installation

1. Locate a new O ring to the stepper motor.
2. Assemble the stepper motor to the housing and locate to the bracket at the rear of the engine.
3. Secure the assembly to the bracket and retain with the fixings. Tighten to **3.5 Nm.**
4. Refit the air pipes in the same locations on the housing as noted prior to removal.
5. Refit the air box and fuel tank as described earlier in this section.
6. Reconnect the battery, positive (red) lead first.
7. Refit the seat.

IDLE CO SETTING

In reference to the setting procedure described on page 8-46, the table below shows the correct idle CO levels for both models.

Because of the fitment for some markets, of an exhaust catalyst and secondary air injection equipment, the idle CO setting procedure differs from area to area.

Adjust the CO level according to the following chart:

	Market/Specification		
	Germany to engine number 148032.	**California. Germany from engine number 148033. All EC markets from models built January 2004 onwards**	**Rest of World.**
Build Specification	Catalyst.	Catalyst plus secondary air injection.	No catalyst or secondary air injection.
Measurement position for CO meter	Tapping in number 2 header pipe.	Tapping in number 2 header pipe.	Tail pipe outlet.
CO level (%) at idle	1.0	0.7	1.0
Setting tolerance	+/- 0.1%	+/- 0.1%	+/- 0.1%
Engine temperature	80-95°C	80-95°C	80-95°C
Adjustment Procedure	Raise the engine temperature until the diagnostic tool allows access to the adjustment keys and make adjustments as necessary. Stop the engine, allow it to cool to below the temperature window for adjustment. Restart the engine and run it until the tool allows adjustment again. Make any further adjustments as necessary to ensure the final setting is correct. **DO NOT OMIT THE SECOND CHECK/ADJUSTMENT.**		

NOTE:

For catalyst equipped bikes, it is necessary to measure idle CO using the tapping in number 2 cylinder header pipe. This is for the following reasons:-

When a catalyst is fitted, the CO level is measured at the tailpipe exit, the effect of the catalyst would distort the reading which can only be accurately measured prior to the exhaust gases passing through the catalyst. The position of the tapping in the header for number 2 cylinder is prior to entry of the gases to the catalyst and does, therefore, offer an accurate measurement position.

EXHAUST SYSTEM

NOTE:

- **To remove the exhaust system, both lower fairings and the radiator must first be removed. Refer to the body and cooling sections for details.**

WARNING: If the engine has recently been running, the exhaust components may be hot to the touch.

Contact with the hot components may cause damage to exposed skin. To avoid skin damage, always allow the hot parts to cool before working on the exhaust system.

1. Release the fixings securing the silencer to the header pipe.

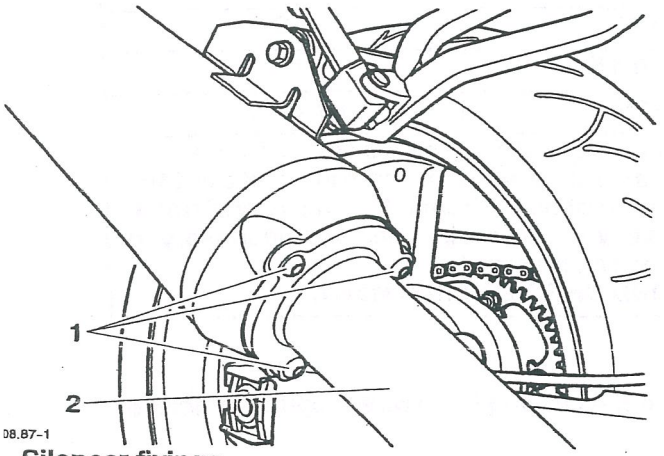

08.87-1

. Silencer fixings

. Header pipe

. Release the fixing securing the silencer bracket to the rear footrest hanger.

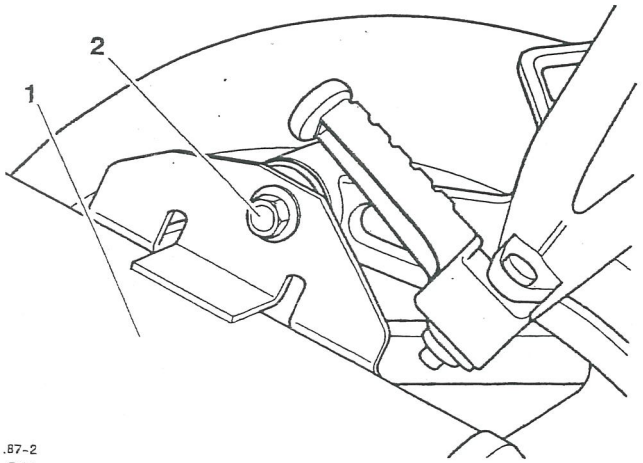

.87-2

Silencer bracket

Fixing

3. Detach the silencer in a rearward direction.

4. At the cylinder head, release the nuts securing the header pipes.

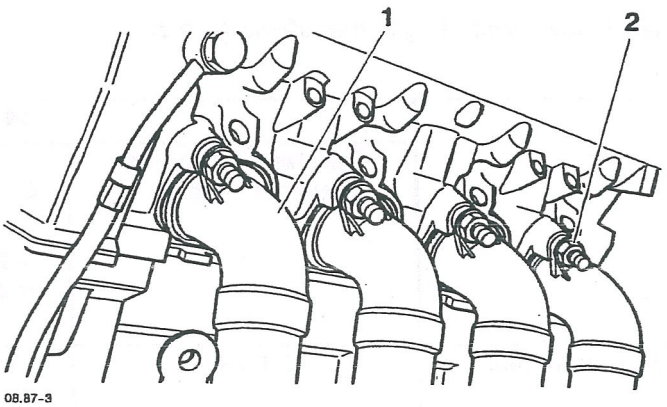

08.87-3

1. Headers

2. Fixings

5. Release the fixing securing the header pipe to the frame.

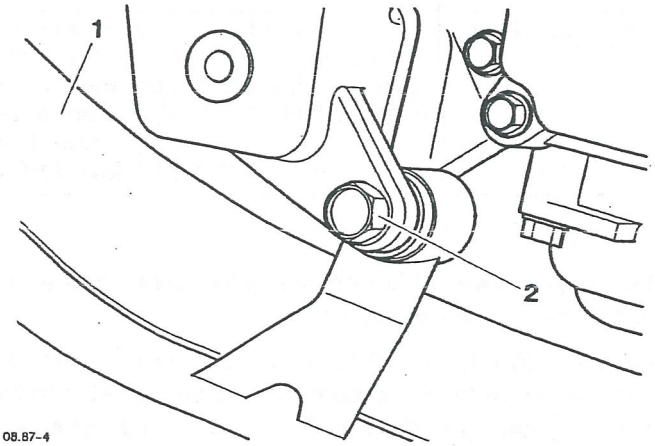

08.87-4

1. Header

2. Fixing

6. Detach and remove the header assembly.

Installation

1. Fit new gaskets to the cylinder head ports.

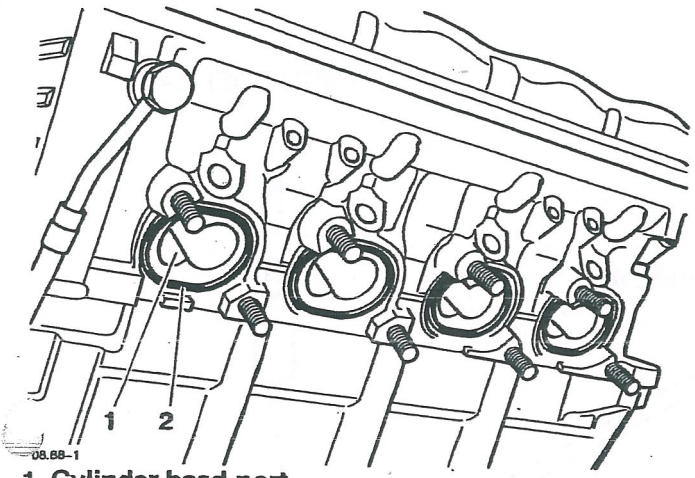

1. Cylinder head port

2. Gasket

NOTE:

- **To retain the gaskets during assembly, apply a smear of grease to the gasket faces in the head.**

2. Apply 'Copperslip' grease top the header studs on the cylinder head.

3. Locate the headers to the cylinder head and secure with the fixings (hand tight only). Ensure the gaskets do not become displaced during assembly.

4. Align the header to the rear mounting point and refit the fixing (hand tight only).

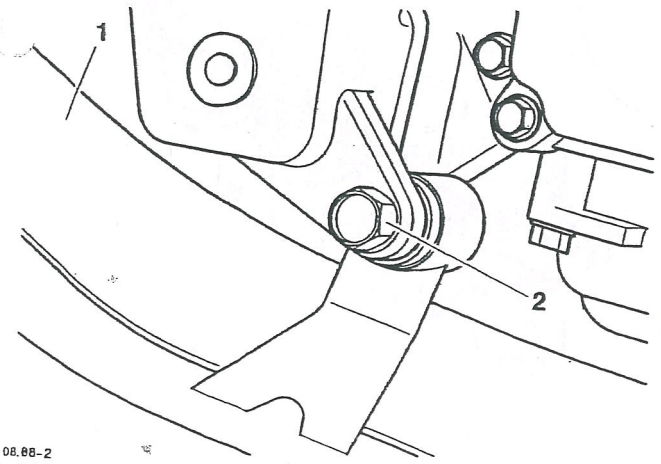

1. Header

2. Fixing

5. Tighten the header nuts to **19 Nm** in the order and sequence shown below.

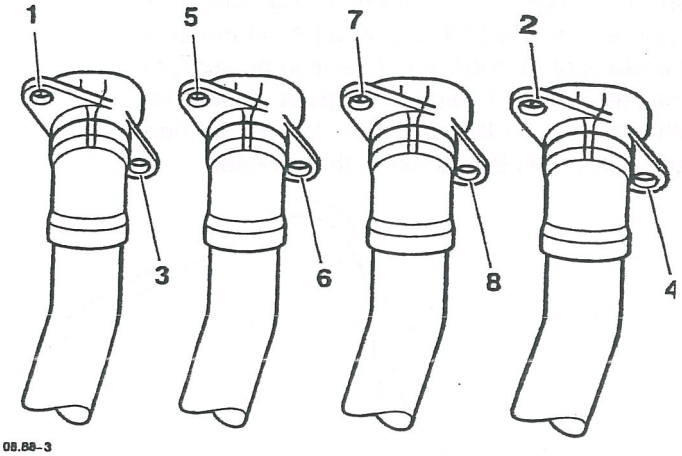

Header tightening sequence

6. Tighten the rear header mounting to **15 Nm.**

7. Fit an new silencer 'O'-ring.

8. Refit the silencer to the header and locate with the three fixings.

9. Align the silencer mounting to the rear footrest hanger and locate with the fixing.

10. Tighten the silencer to header fixings to **15 Nm.**

11. Tighten the silencer mounting to **15 Nm.**

12. Refit the radiator and lower fairings as described in the cooling and bodywork sections respectively.

EVAPORATIVE LOSS CONTROL SYSTEM - CALIFORNIA MODELS ONLY

California Models Only

All California models are fitted with a system to control the evaporation of fuel vapour into the atmosphere.

A carbon cannister absorbs vapour while the engine is not running and, when the engine is started, the vapour is returned to the engine and burnt. There are two distinct phases to the system's operation, engine off and engine running. These two conditions are explained overleaf.

Component Locations

Carbon Cannister - beneath the rear mudguard.

Purge Valve - adjacent to frame, left hand side (electronically controlled by the ECM).

Roll Over Valve - in the vapour line from the fuel tank.

Evaporative Control System - Engine Off.

When the engine is stationary any pressure increase in the fuel tank due to a rise in ambient temperature or through direct heating by sunlight will cause the fuel vapour to pass down the breather pipe A to the canister. Vapour is then stored in charcoal layers within the canister.

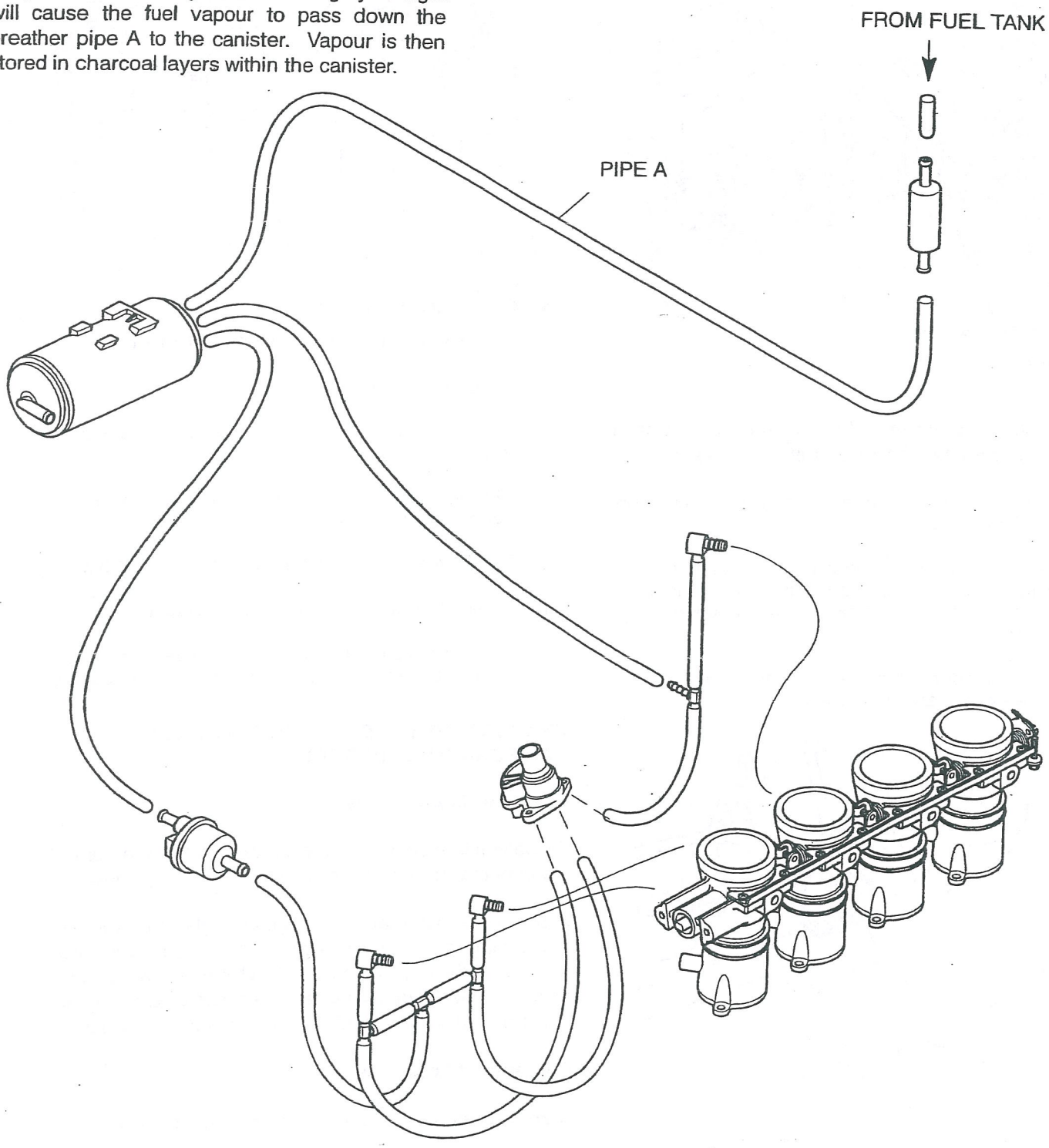

Evaporative Control System - Engine Running

When the engine is started, vacuum is applied via pipe C to the vacuum switch on the canister, causing the canister valve to open. Direct return of vapour, along pipe B, to the idle control housing is prevented by the purge control valve which is governed by the engine management system ECM. The purge control valve is shuttled between the open and closed position during purging to prevent transient rich mixture and high emissions.

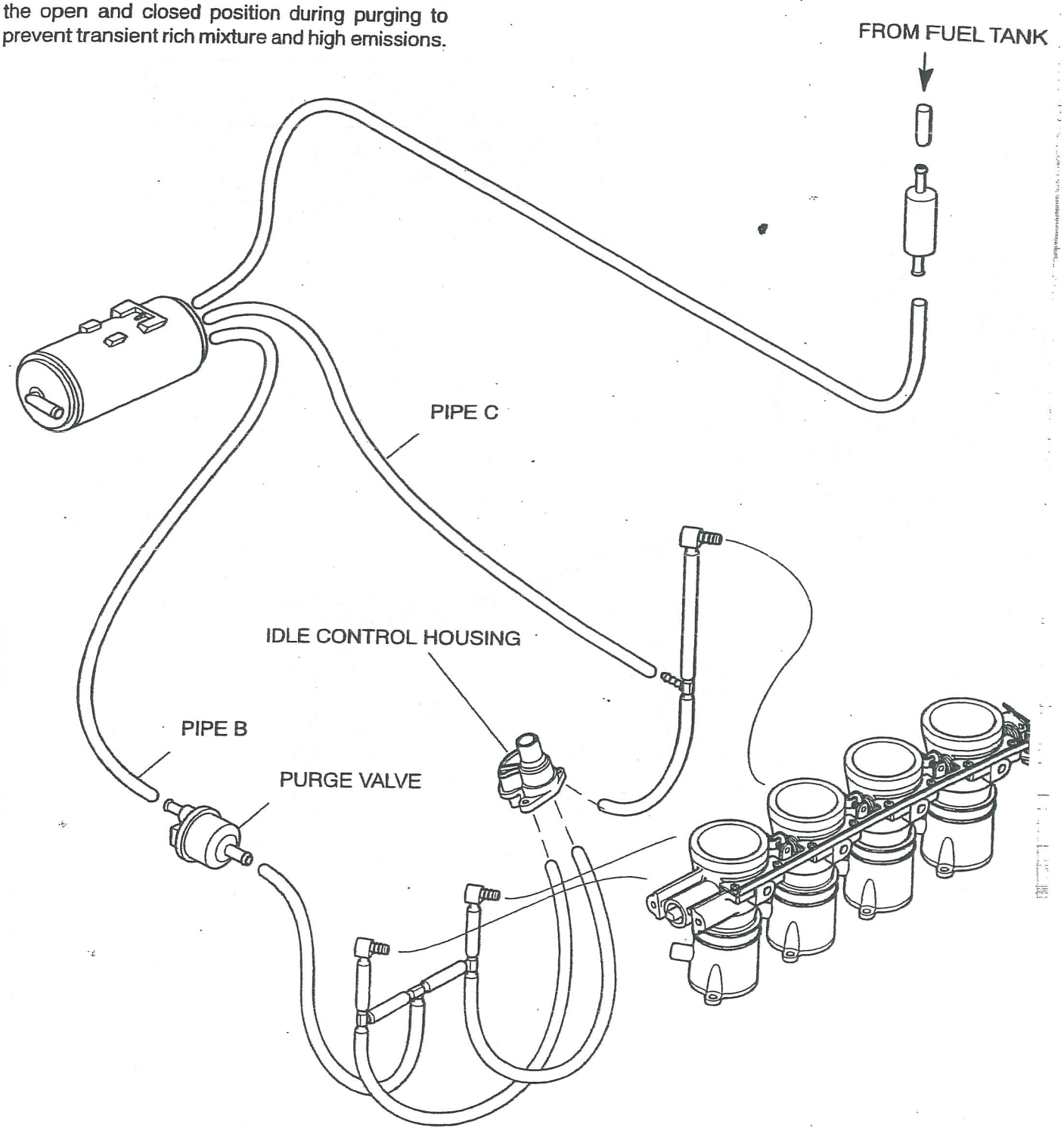

Evaporative Control System - on-bike layout

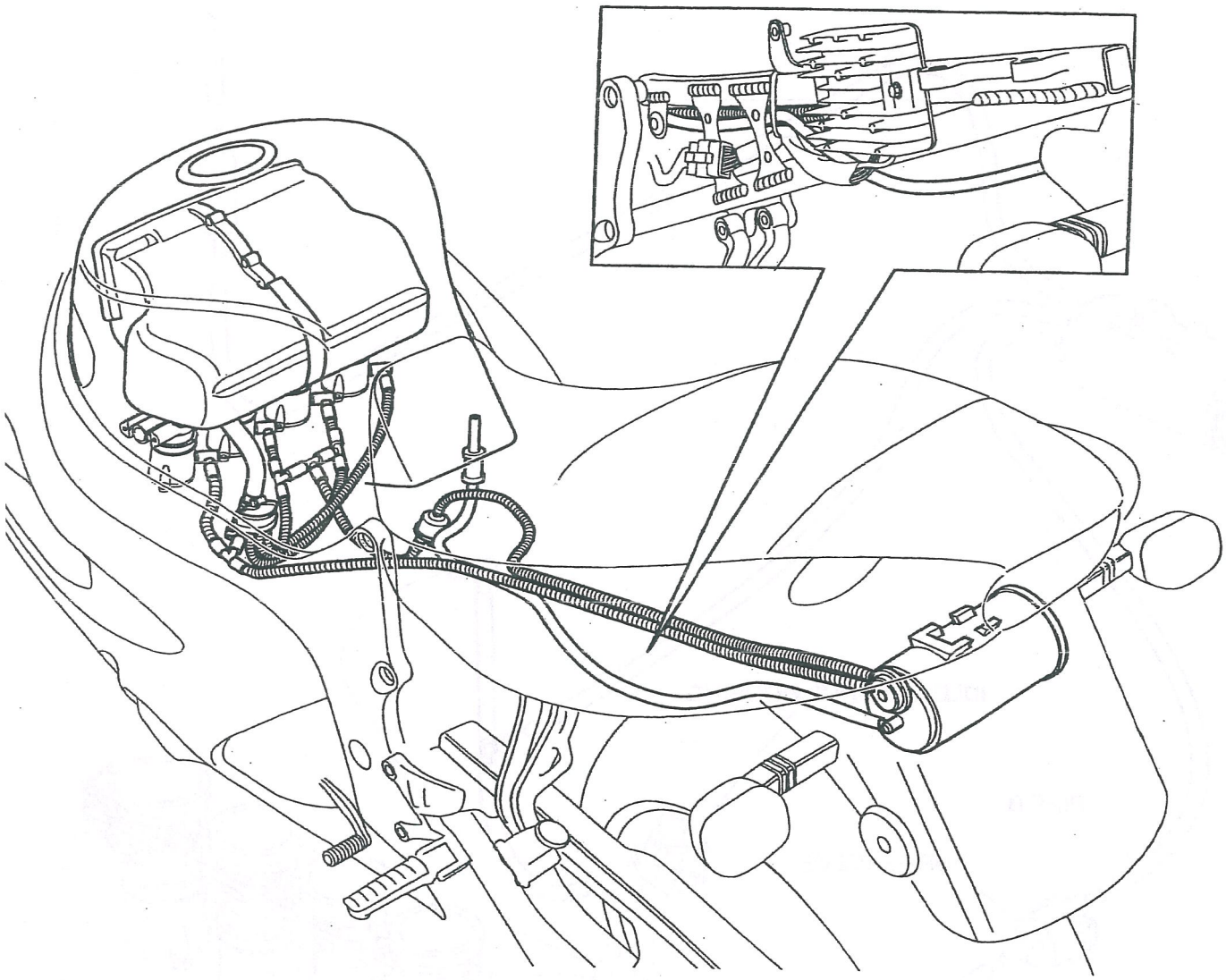

SECONDARY AIR INJECTION SYSTEM (California models only)

System Operation

The secondary air injection system is an aid to reducing levels of pollutants in the exhaust gases.

An exhaust port mounted, reed valve control system is fitted to California models only. Each time a pair of exhaust valves open, the exhaust gases in the exhaust port create a depression which causes reed valves in the secondary air injection system to open. When open, the depression in the exhaust port draws air from the airbox, through the open reed valves, into the exhaust port. This air promotes secondary combustion of the exhaust gases in the ports and header system.

Once the exhaust valves close, the depression is reduced and the reed valves close.

REED VALVE ASSEMBLY

Removal

1. Remove the seat and disconnect the battery negative (black) lead first.
2. Remove fuel tank and airbox as described elsewhere in this section.
3. Remove the radiator as described in the cooling system section.
4. Release the hoses from the two secondary air injection reed valve assemblies.
5. Release the fixings securing the valves to the cylinder head.

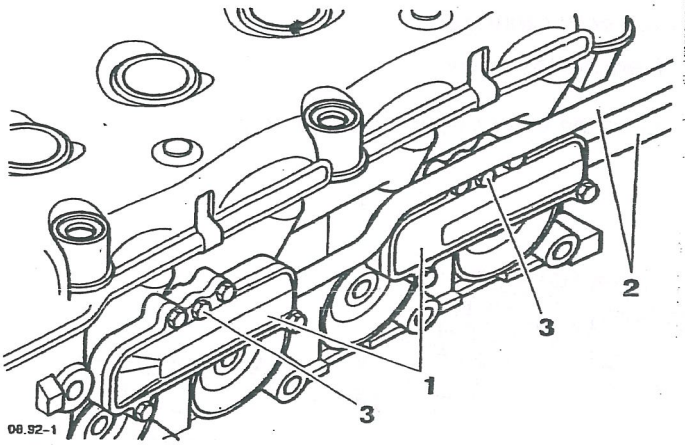

1. Reed valve assemblies

2. Hose connections

3. Fixings to head

6. Gently ease the valve assemblies upwards to remove from the cylinder head.

Disassembly

1. Release the fixings securing the valve cover.

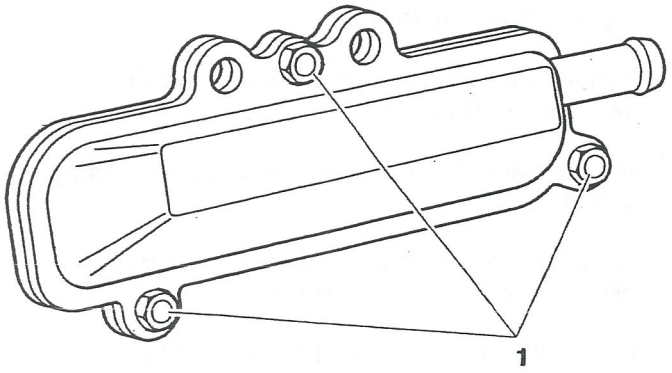

08.93-1

1. Valve cover fixings

2. Remove the cover.

3. Ease the valves from the valve body.

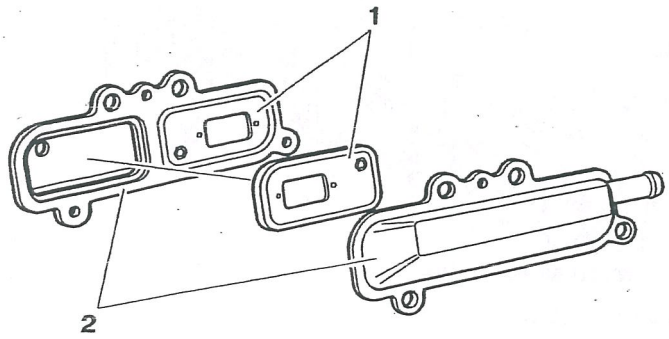

08.93-2

1. Valves

2. Valve body

Inspection

1. Check for cracks, bending or other damage to the valve flaps. Replace as necessary.

2. Check for damage to the red coloured seals. Replace as necessary.

3. Check the valve body to cylinder head 'O'-rings. Replace as necessary.

Assembly

1. Fit a new gasket to the cover.

2. Refit the valves to the valve body.

NOTE:

- **The valves will only fit in one orientation.**

3. Refit the cover and secure with the cover fixings.

Installation

1. Apply a light smear of grease to the valve body 'O'-rings, to aid assembly.

2. Locate the valve assemblies to the cylinder head. Tighten the fixings to **10 Nm.**

3. Refit the air hoses to the valve bodies.

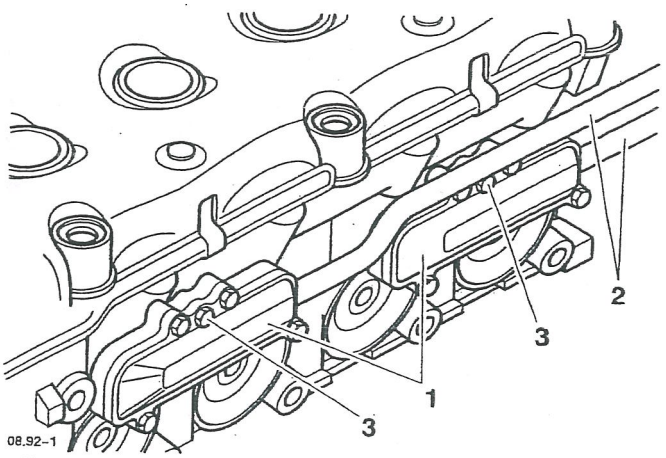

08.92-1

1. Reed valve assemblies

2. Hose connections

3. Fixings to head

4. Refit airbox and fuel tank as described elsewhere in this section.

5. Refit the radiator and refill the cooling system as described in the cooling system section.

6. Reconnect the battery negative (black) lead first. Refit the seat.

COOLING SYSTEM

CONTENTS

	Page
Exploded View – Cooling System	9.2
Coolant	9.4
Heat Exchanger	9.4
Coolant Level Inspection	9.4
Coolant Replacement	9.5
Drainage	9.5
Filling	9.6
Radiator Hoses	9.7
Radiator And Cooling Fan	9.7
Coolant Pressure Cap	9.7
Inspection	9.7
Water Pump	9.8
Removal	9.8
Installation	9.9
Radiator	9.10
Inspection	9.11
Installation	9.11
Thermostat	9.13
Removal	9.13
Installation	9.14

Exploded View - Cooling System TT600

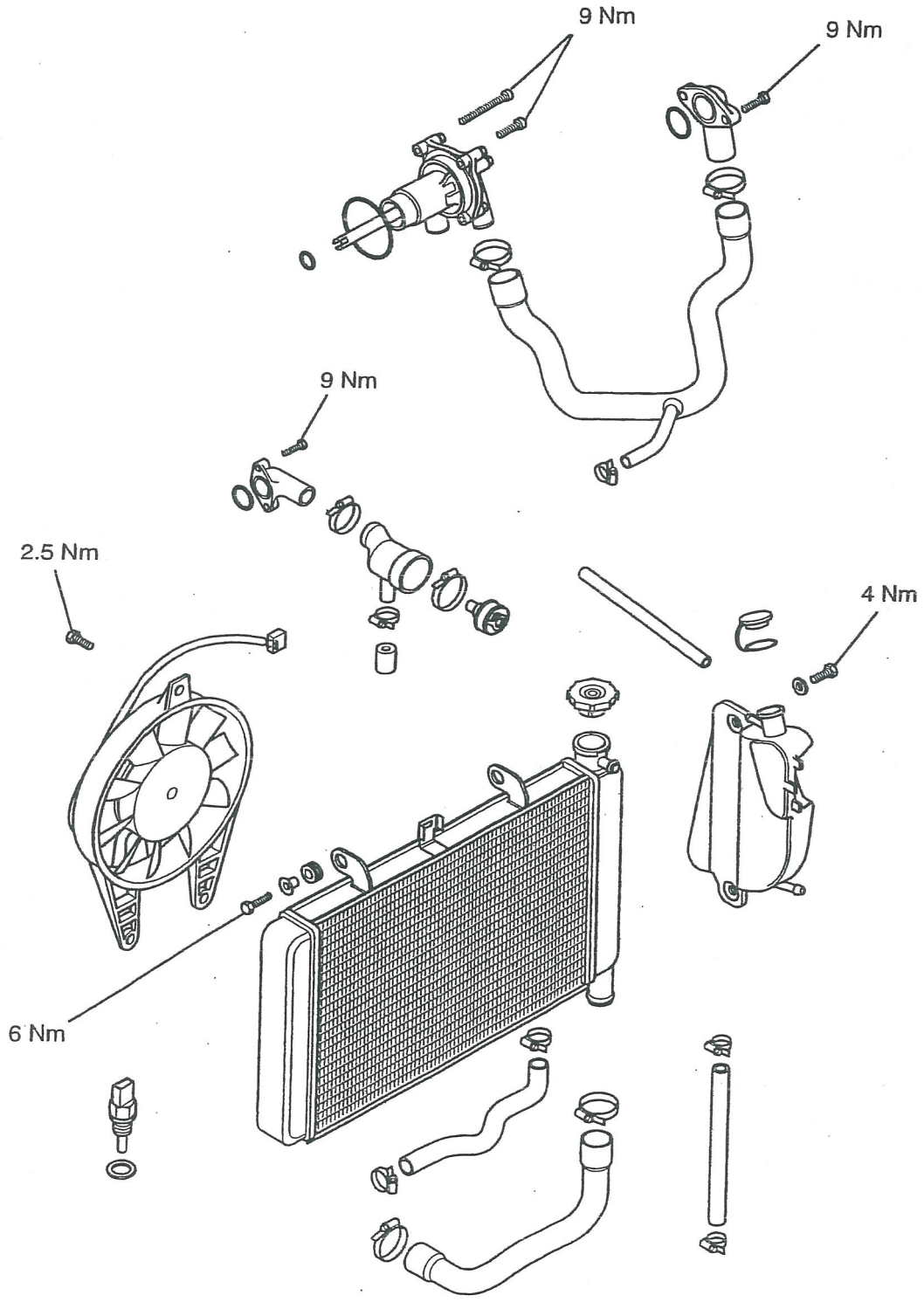

Exploded View - Cooling System - Speed Four

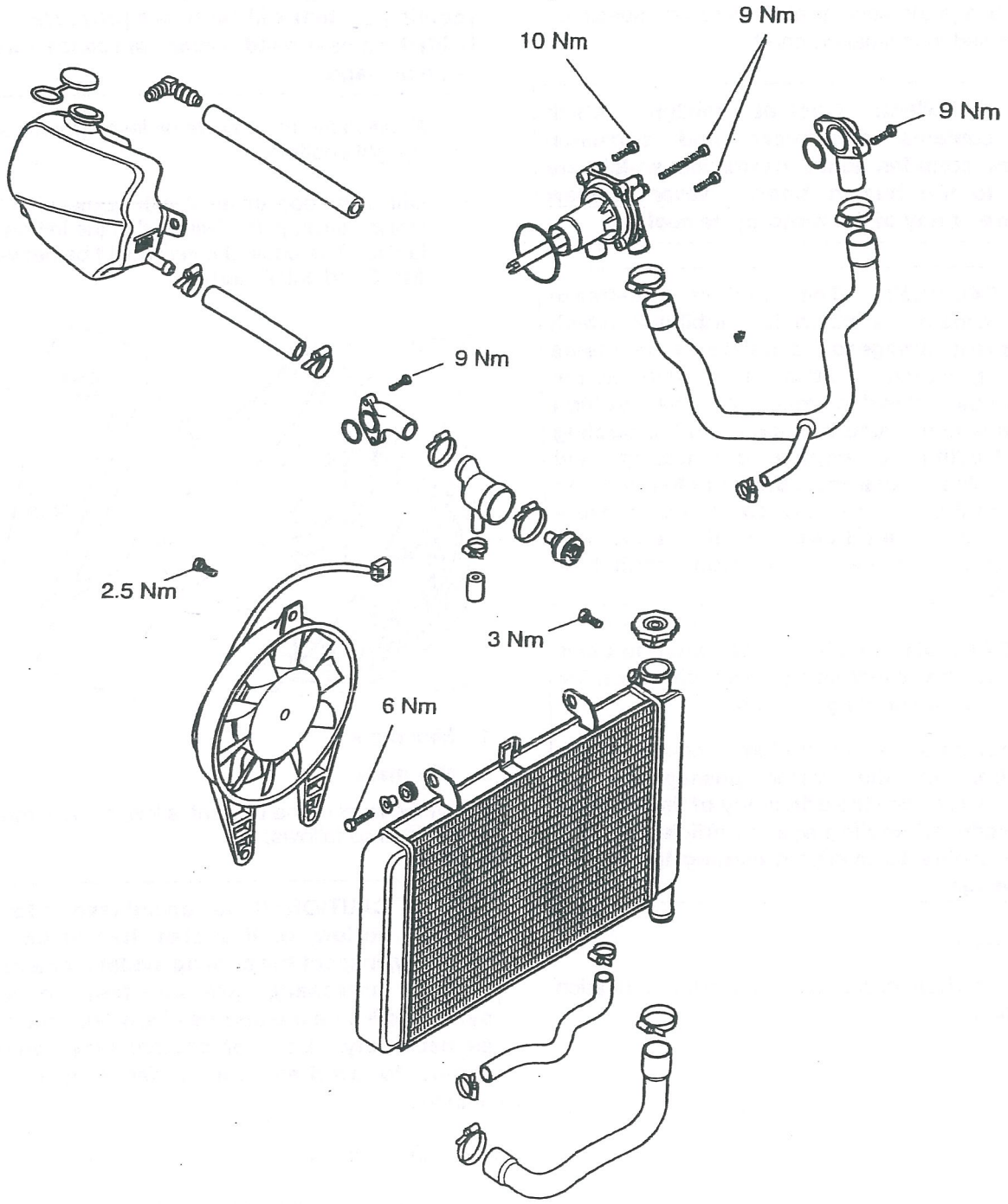

COOLANT

A permanent type of anti-freeze is installed in the cooling system when the motorcycle leaves the factory. It is coloured blue, contains a 50% solution of ethylene glycol, and has a freezing point of -35°C (-31°F).

Always change the coolant at the intervals specified in the scheduled maintenance chart.

WARNING: Coolant mixture which contains anti-freeze and corrosion inhibitors contains toxic chemicals which are harmful to the human body. Never swallow anti-freeze or any of the motorcycle coolant.

CAUTION: The coolant anti-freeze contains a corrosion inhibitor which helps prevent damage to the metal surfaces inside the cooling system. Without this inhibitor, the coolant would 'attack' the metals and the resulting corrosion would cause blockages in the cooling system leading to engine overheating and damage. Always use the correct anti-freeze as specified in the owner's handbook. Never use a methanol based anti-freeze as this does not contain the required corrosion inhibition properties.

CAUTION: Distilled water must be used with the anti-freeze (see specification for anti-freeze) in the cooling system.

If hard water is used in the system, it causes scale accumulation in the water passages, and considerably reduces the efficiency of the cooling system. Reduced cooling system efficiency may cause the engine to overheat leading to severe engine damage.

leat Exchanger

or details of the heat exchanger, refer to the lubrication ystem section.

Coolant Level Inspection

WARNING: Do not remove the coolant pressure cap when the engine is hot. When the engine is hot, the coolant inside the cooling system will be under pressure. Contact with the pressurised coolant will cause scalds and skin damage.

1. Position the motorcycle on level ground and in an upright position.
2. Check the coolant level in the expansion tank by looking through the 'window' in the left hand lower fairing. The coolant level should be between the 'MAX' and 'MIN' marks.

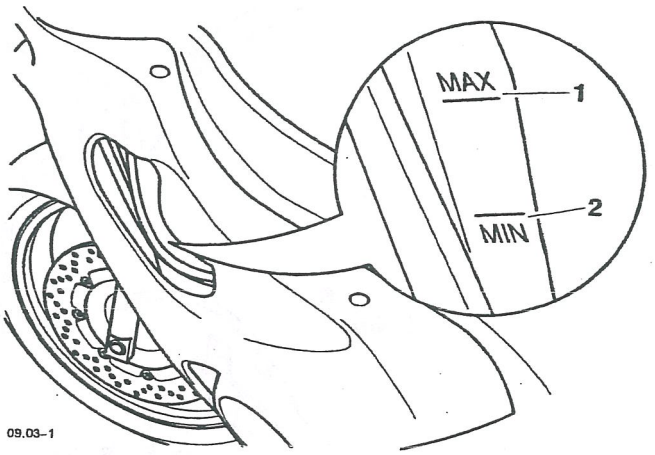

1. **Max mark**
2. **Min mark**

3. If the level of the coolant is low, coolant must be added as follows:

CAUTION: If the coolant level is found to be low, or if coolant has to be added regularly, inspect the cooling system for a coolant leak. If necessary, pressure test the cooling system to locate the source of any leak and rectify as necessary. Loss of coolant may cause the engine to overheat and suffer severe engine damage.

4. Remove the seat.
5. Remove the left hand lower fairing, as described in the body section.

6. Remove the expansion tank cap and add coolant mixture as necessary to bring the coolant level up to the 'MAX' mark (bike upright).

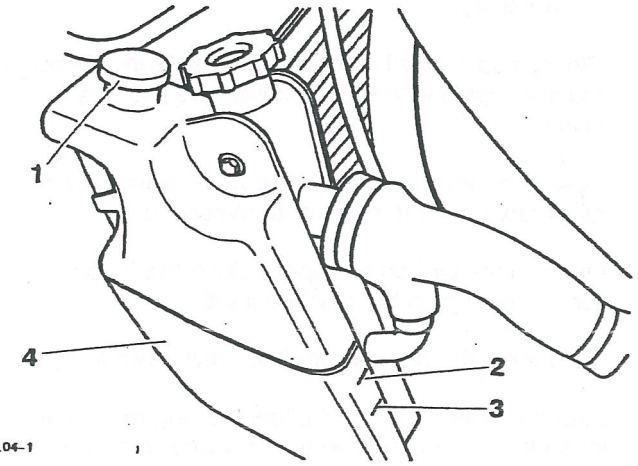

1. **Expansion tank cap**
2. **Max mark**
3. **Min mark**
4. **Expansion tank**

7. Refit the expansion tank cap.

8. Refit the left hand lower fairing, as described in the body section.

9. Refit the seat.

Coolant Replacement

Drainage

WARNING: Do not remove the coola pressure cap when the engine is hc When the engine is hot, the coolant inside th cooling system will be under pressure. Conta with the pressurised coolant will cause scalds an skin damage.

NOTE:

- **The coolant may be replaced after fi removing the seat and disconnecting t battery, negative (black) lead first. The left ha lower fairing must also be removed. Refer to t relevant sections for removal procedures.**

1. Remove the coolant pressure cap on the radiatc

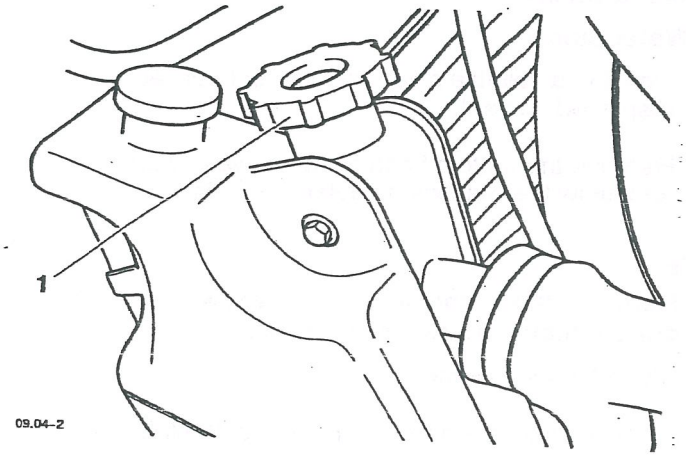

1. **Coolant pressure cap**

2. Remove the drain plug from the crankcase.

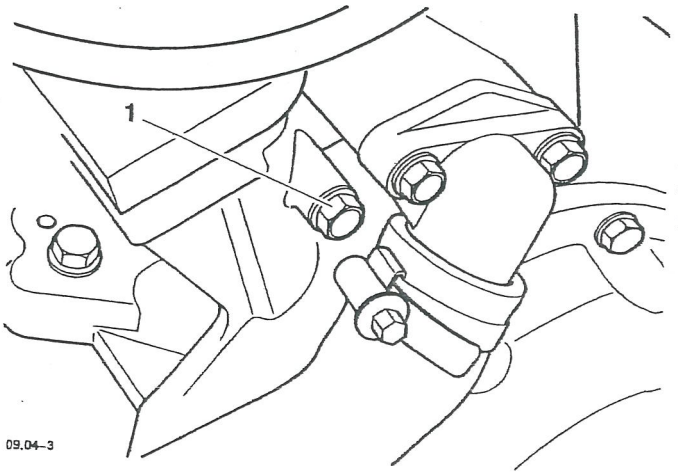

1. **Coolant drain plug**

3. Slacken the bleed screw on the water pump to help drainage.

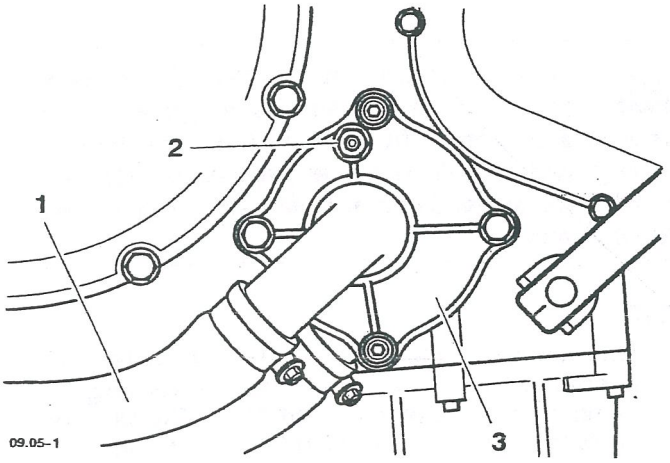

1. **Bottom hose**
2. **Bleed screw**
3. **Water pump**

4. Position a suitable clean receptacle to collect the displaced coolant.

5. Remove the bottom hose from the water pump and allow the remaining coolant to drain.

NOTE:

- **Retain the coolant for reuse unless contaminated or due for renewal.**

6. Close the bleed screw.

7. Fit the coolant drain plug. Tighten to **13 Nm.**

Refill

1. Fit the bottom hose to the water pump and tighten the hose clip.

2. Slowly add coolant mixture to the system, through the filler opening in the radiator, until the system is full.

3. Open the bleed screw, on the water pump, and allow any air in the system to evacuate.

4. Once all the air has escaped, close the bleed screw and top up the coolant level.

5. Reconnect the battery, positive (red) lead first.

6. Start the motorcycle and allow the engine to idle for a short period of time to allow any remaining air to be expelled from the system.

7. Stop the engine and top up the coolant level, if required.

8. Fit the coolant pressure cap.

9. Check the expansion tank level and top up, if required.

10. Refit the lower fairing as described in the body section.

11. Refit the seat.

RADIATOR HOSES

Inspection

1. Regularly check all radiator hoses and clips for cracks, leaks or deterioration in accordance with the scheduled maintenance chart.

RADIATOR AND COOLING FAN

Inspection

WARNING: The cooling fan operates automatically, even with the ignition switched off. To prevent injury, keep hands and clothing away from the fan blades at all times.

CAUTION: Using high pressure water, as from a car-wash facility, can damage the radiator fins and impair the radiators efficiency.

Do not obstruct or deflect airflow through the radiator by installing unauthorised accessories in front of the radiator or behind the cooling fan. Interference with the radiator air flow can lead to overheating and consequent engine damage.

1. Check the radiator fins for obstruction by insect, mud, leaves and general debris. Clean off any obstructions by hand or with a stream of low pressure water.

COOLANT PRESSURE CAP

Inspection

WARNING: Do not remove the coolant pressure cap when the engine is hot When the engine is hot, the coolant inside the cooling system will be under pressure. Contact with the pressurised coolant will cause scalds and skin damage.

1. Check the condition of the upper and lower seals of the coolant pressure cap for damage or deterioration. If any damage or deterioration is found, replace the cap.

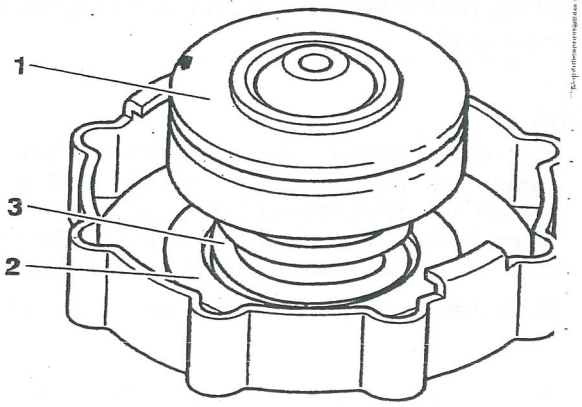

09.06-1

1. Lower seal

2. Upper seal

3. Spring

2. Pressure test the cap to the blow-off pressure of 1.1 bar. If the pressure cap opens at a lower pressure or fails to open at 1.1 bar, replace the cap.

WATER PUMP

Removal

WARNING: Before starting work, ensure the motorcycle is stabilised and adequately supported. This will help prevent it from falling and causing injury to the operator or damage to the motorcycle.

WARNING: Do not remove the coolant pressure cap when the engine is hot. When the engine is hot, the coolant inside the cooling system will be under pressure. Contact with the pressurised coolant will cause scalds and skin damage.

NOTE:

- **The water pump may be removed after first removing the seat and disconnecting the battery negative (black) lead first. The left hand lower fairing must also be removed. Refer to the relevant sections for removal procedures.**

1. Drain the coolant, as described elsewhere in this section.
2. Disconnect the coolant hoses from the water pump.

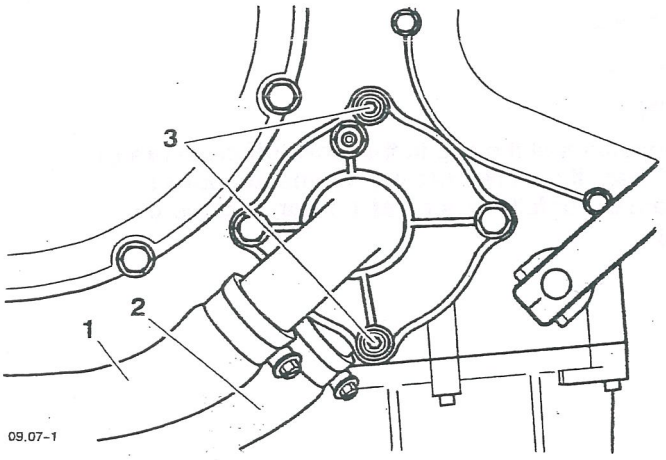

09.07-1

1. Bottom hose
2. Heat exchanger hose
3. Water pump fixings

. Release and remove the bolts securing the water pump to the crankcase.

4. Withdraw the water pump, complete with its 'O' ring.

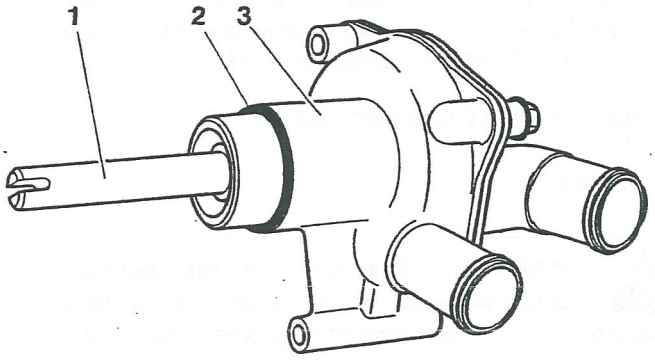

09.07-2

1. **Drive shaft**
2. **'O' ring**
3. **Water pump**

Inspection

1. Check the water pump shaft and bearings for side and end float. Replace if necessary.
2. Release and remove the pump cover bolts and separate the pump cover from the pump body.

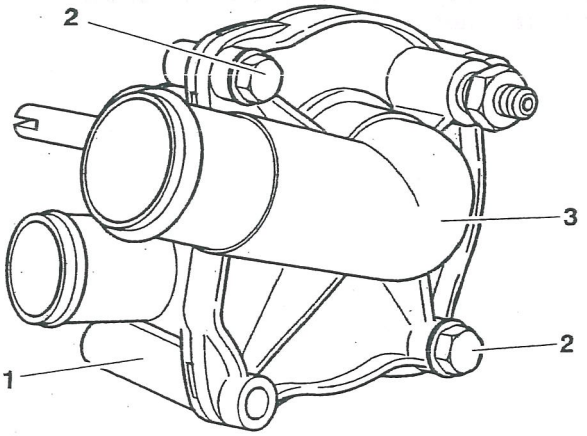

09.07-3

1. **Pump**
2. **Bolts**
3. **Pump cover**

3. Check for corrosion and/or scale build up around the impeller and in the pump body. Replace if corrosion and/or scale build up is found.

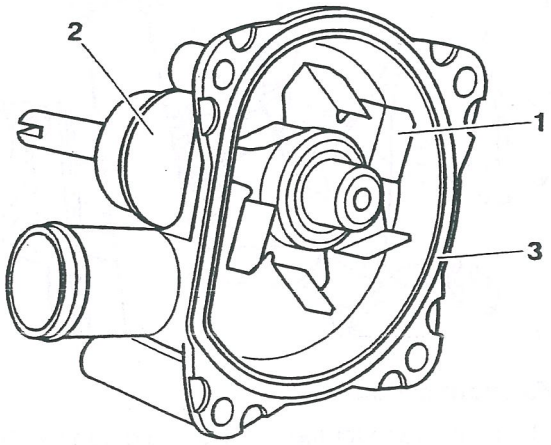

09.08-1

1. **Pump impeller**
2. **Pump body**
3. **'O' ring**

4. Check the 'O' ring (pump body) for damage or deterioration. Replace if necessary.

5. Check the external 'O' ring for damage or deterioration. Replace if necessary.

Installation

1. Fit the pump cover to the pump body, complete with a new 'O' ring if required. Tighten the bolts to **12 Nm.**

2. Fit the external 'O' ring to the pump body.

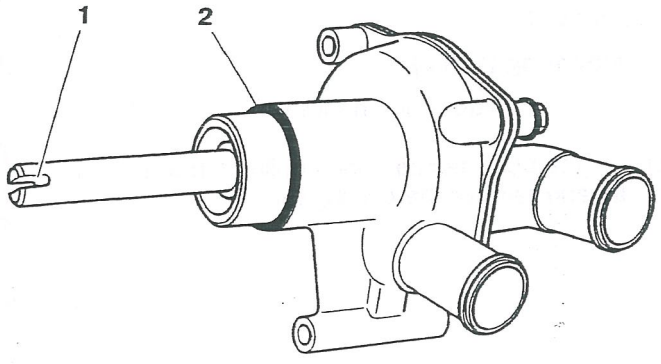

09.08-2

1. Drive slot
2. 'O' ring

3. Align the drive slot in the water pump with the drive peg on the oil pump (inside the crankcase

4. Fit the water pump to the crankcase and tighten the bolts to **9 Nm.**

5. Fit the hoses to the water pump and tighten the clips.

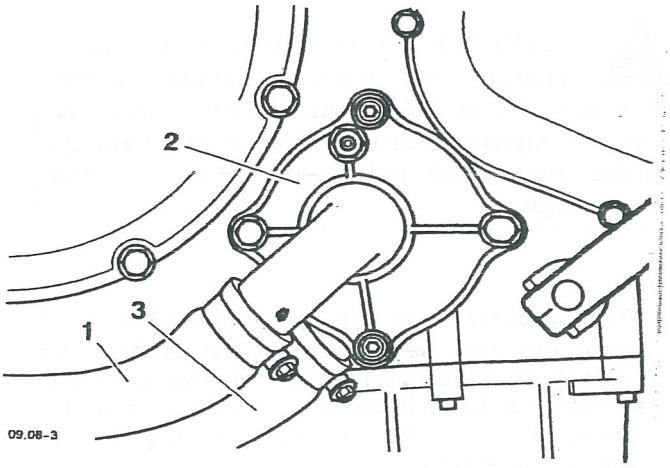

09.08-3

1. **Bottom hose**
2. **Water pump**
3. **Heat exchanger hose**

6. Fill the cooling system, as described elsewhere i this section.

7. Reconnect the battery, positive (red) lead first.

8. Start the motorcycle and allow the engine to idle for a short period of time to allow any air to be expelled from the system.

9. Stop the engine and top up the coolant level, if required.

10. Fit the coolant pressure cap.

11. Check the expansion tank level and top up, if required.

12. Refit the lower fairing, as described in the body section.

13. Refit the seat.

RADIATOR

WARNING: Before starting work, ensure the motorcycle is stabilised and adequately supported. This will help prevent it from falling and causing injury to the operator or damage to the motorcycle.

WARNING: Do not remove the coolant pressure cap when the engine is hot. When the engine is hot, the coolant inside the cooling system will be under pressure. Contact with the pressurised coolant will cause scalds and skin damage.

NOTE:

- **The radiator may be removed after first removing the seat and disconnecting the battery negative (black) lead first. The fuel tank, airbox and both lower fairings must also be removed. Refer to the relevant sections for removal procedures.**

1. Drain the coolant as described elsewhere in this section.

2. Disconnect the top, bottom and by-pass hoses from the radiator.

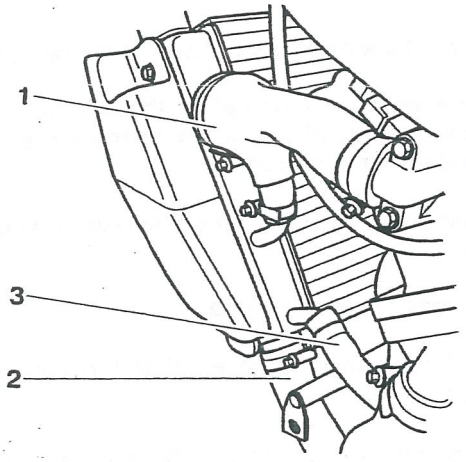

09.09-1

Top hose

Bottom hose

By-pass hose

Disconnect the cooling fan multiplug.

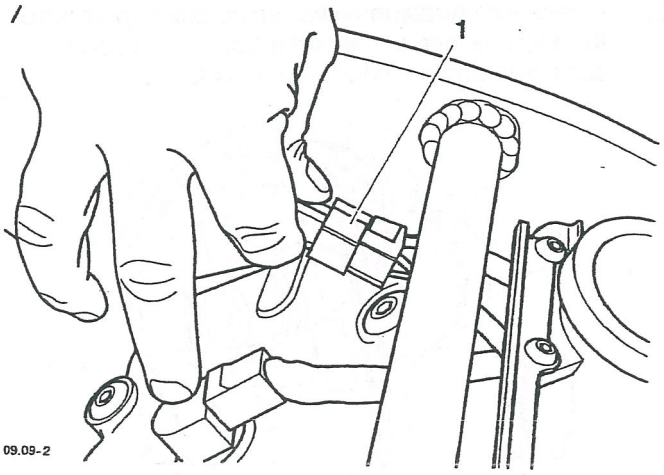

09.09-2

1. Fan connection

4. Undo the radiator top and bottom mounting bolts and move the radiator off the left hand top mounting dowel.

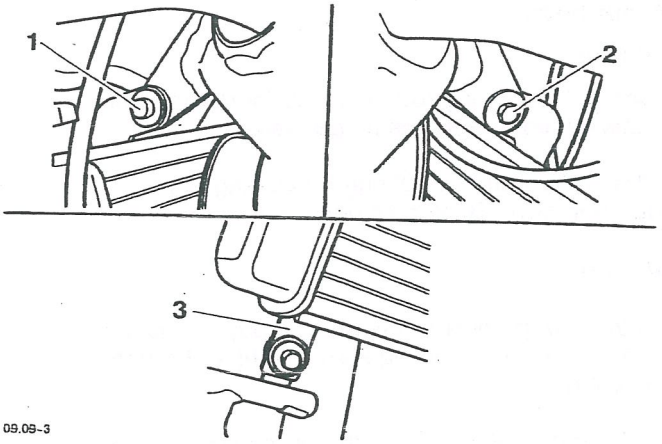

09.09-3

1. Dowel

2. Top mount bolt

3. Lower mounting (1 of 2)

5. Remove the radiator from the frame.

6. Release the bolts securing the cooling fan to the radiator and remove the cooling fan.

7. Release the bolts securing the expansion tank to the radiator and remove the expansion tank.

8. Remove the thermostat.

Inspection

> ⚠ **CAUTION: To avoid overheating and consequent engine damage, replace the radiator if the cores are blocked or if the fins are badly deformed or broken.**

1. Check the radiator for stone damage.

2. Check the radiator core for damage to fins or obstructions of air flow. Any damage to the fins should be repaired or the radiator replaced, as required. Any blockages found should be rectified.

3. Check the cooling fan for damage and/or wear. If damage and/or wear is found, repair or replace the radiator.

Installation

1. Fit the cooling fan to the radiator. Tighten the bolts to **2.5 Nm.**

2. Fit the expansion tank to the radiator. Tighten tl bolts to **4 Nm.**

3. Fit the thermostat with the bypass hole at the to

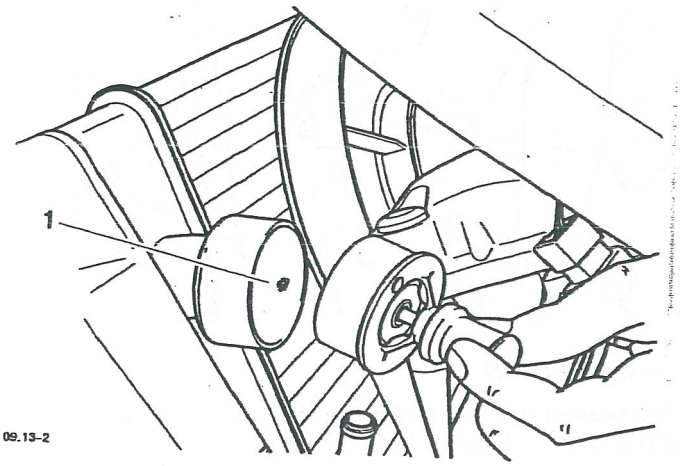

1. Thermostat location

4. Position the radiator to the frame and locate to the top mounting dowel. Ensure the grommet in the mounting bracket does not become detached during assembly.

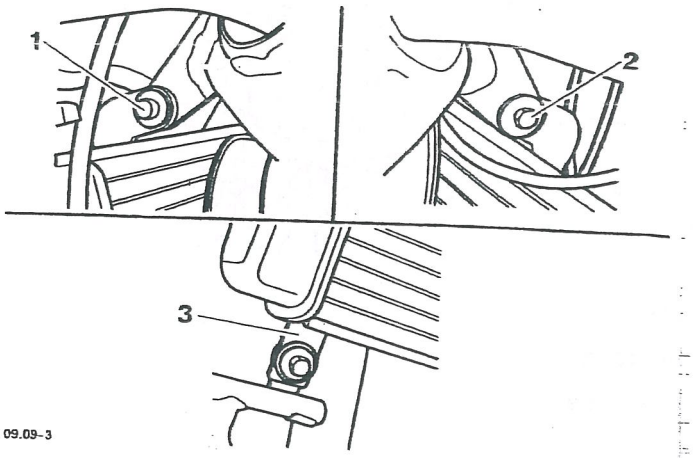

1. Dowel

2. Top mount bolt

3. Lower mounting (1 of 2)

5. Fit the top mounting bolt, hand tight, to the right hand bracket.

6. Fit and tighten the lower mounting bolts.
7. Tighten the top mounting bolt to **6 Nm.**
8. Reconnect the cooling fan multi plug

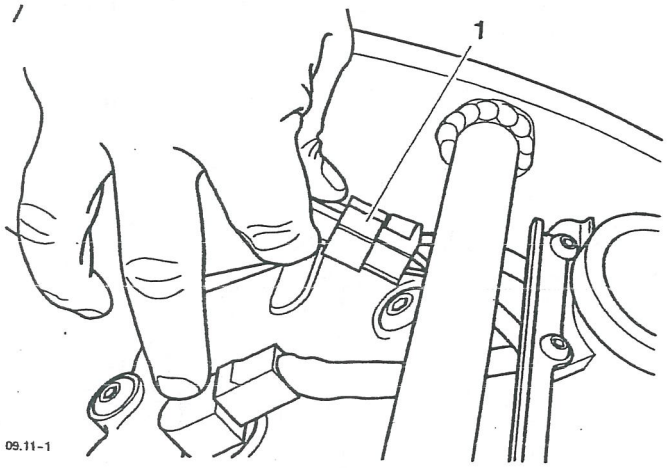

1. Fan connection

9. Reconnect the top, bottom and by-pass hoses to the radiator. Tighten the hose clips.

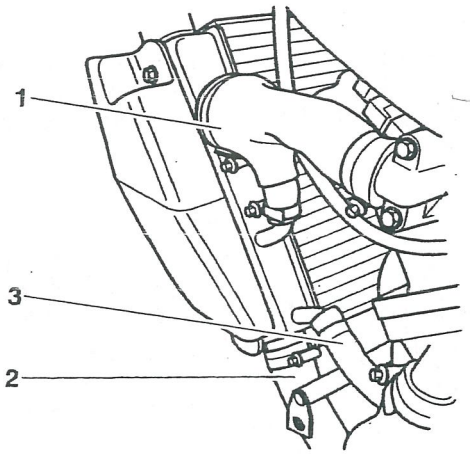

Top hose

Bottom hose

By-pass hose

10. Fill the coolant system as described elsewhere in this section.
11. Fit the airbox and fuel tank as described in the fuel system section.
12. Connect the battery, positive (red) lead first.
13. Start the motorcycle and allow the engine to idle for a short period of time to allow any air to be expelled from the system.
14. Stop the engine and top up the coolant level, if required.
15. Fit the coolant pressure cap.
16. Check the expansion tank level and top up, if required.
17. Refit both lower fairings, as described in the body section.
18. Refit the seat.

THERMOSTAT

Removal

WARNING: Before starting work, ensure the motorcycle is stabilised and adequately supported. This will help prevent it from falling and causing injury to the operator or damage to the motorcycle.

WARNING: Do not remove the coolant pressure cap when the engine is hot. When the engine is hot, the coolant inside the cooling system will be under pressure. Contact with the pressurised coolant will cause scalds and skin damage.

NOTE:

- **The thermostat may be removed after first removing the seat and disconnecting the battery (negative (black) lead first). The left hand lower fairing must also be removed. Refer to the relevant sections for removal procedures.**

1. Drain the cooling system as described elsewhere in this section.
2. Remove the top hose.

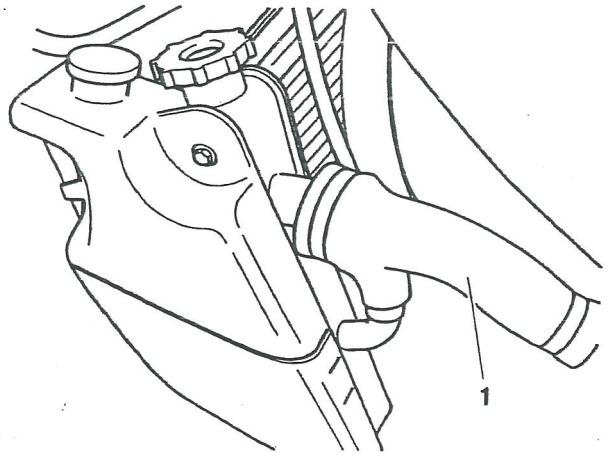

09.12-1

1. Top hose

3. Remove the thermostat from within the radiator.

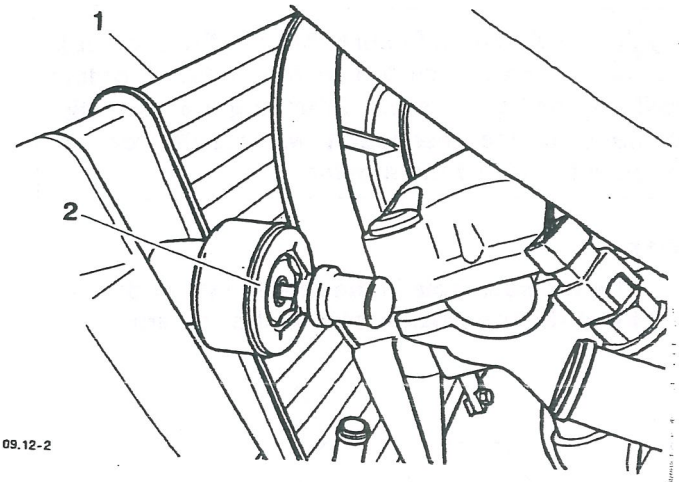

09.12-2

1. **Radiator**
2. **Thermostat**

Inspection

1. Inspect the thermostat at room temperature. If the valve is open the thermostat must be replaced.
2. Check the valve opening temperature:
   - Suspend the thermostat in a container of water and raise the temperature of the water until the thermostat opens. Note the opening temperature.
   - If the temperature at which the thermostat opens differs from the nominal setting of **84°C +/- 0.5°C**, the thermostat must be replaced.

Installation

CAUTION: Ensure that the thermostat is correctly seated in the radiator before refitting the top hose and tightening the hose clip. Damage to the thermostat will result from an incorrectly seated thermostat.

NOTE:

- **The by-pass hole in the thermostat body must be at the top when seated in the radiator**

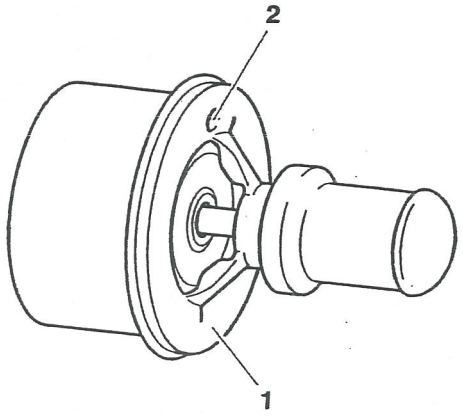

09.13-1

1. **Thermostat temperature rating**
2. **By-pass hole**

1. Locate the thermostat into the radiator outlet with the bypass hole to the top.

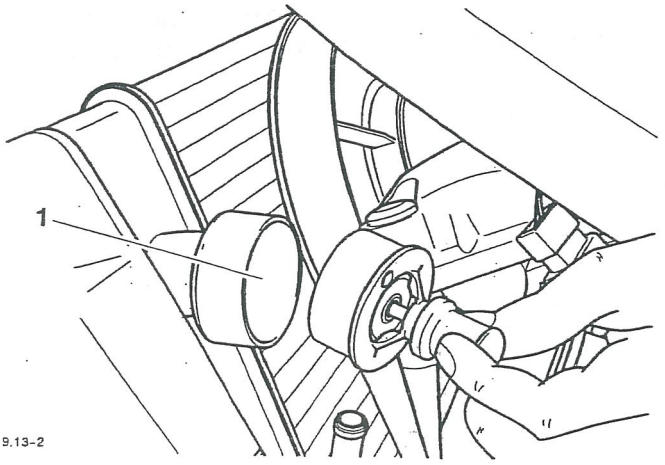

9.13-2

Thermostat location

2. Refit the top hose and tighten the hose clips.
3. Fill the cooling system as described earlier in this section.
4. Reconnect the battery, positive (red) lead first.
5. Start the motorcycle and allow the engine to idle for a short period of time to allow any air to be expelled from the system.
6. Stop the engine and top up the coolant level, if required.
7. Fit the coolant pressure cap.
8. Check the expansion tank level and top up, if required.
9. Refit the lower fairing as described in the body section.
10. Refit the seat.

REAR SUSPENSION

CONTENTS

	Page
Exploded View - Swinging Arm	10.2
Exploded View - Rear Hub	10.3
Exploded View - Rear Suspension Unit	10.4
Exploded View - Drop / Drag Link	10.5
Drive Chain	10.6
Chain Lubrication	10.6
Chain Slack Inspection	10.7
Chain Wear Inspection	10.7
Drive Chain adjustment	10.8
Rear Suspension Unit	10.9
Removal	10.9
Inspection	10.10
Installation	10.10
Drag Link	10.12
Removal	10.12
Inspection	10.13
Installation	10.13
Swinging Arm/Drive Chain Renewal	10.14
Removal	10.14
Inspection	10.16
Installation	10.16
Final Drive	10.18

Exploded View - Swinging Arm

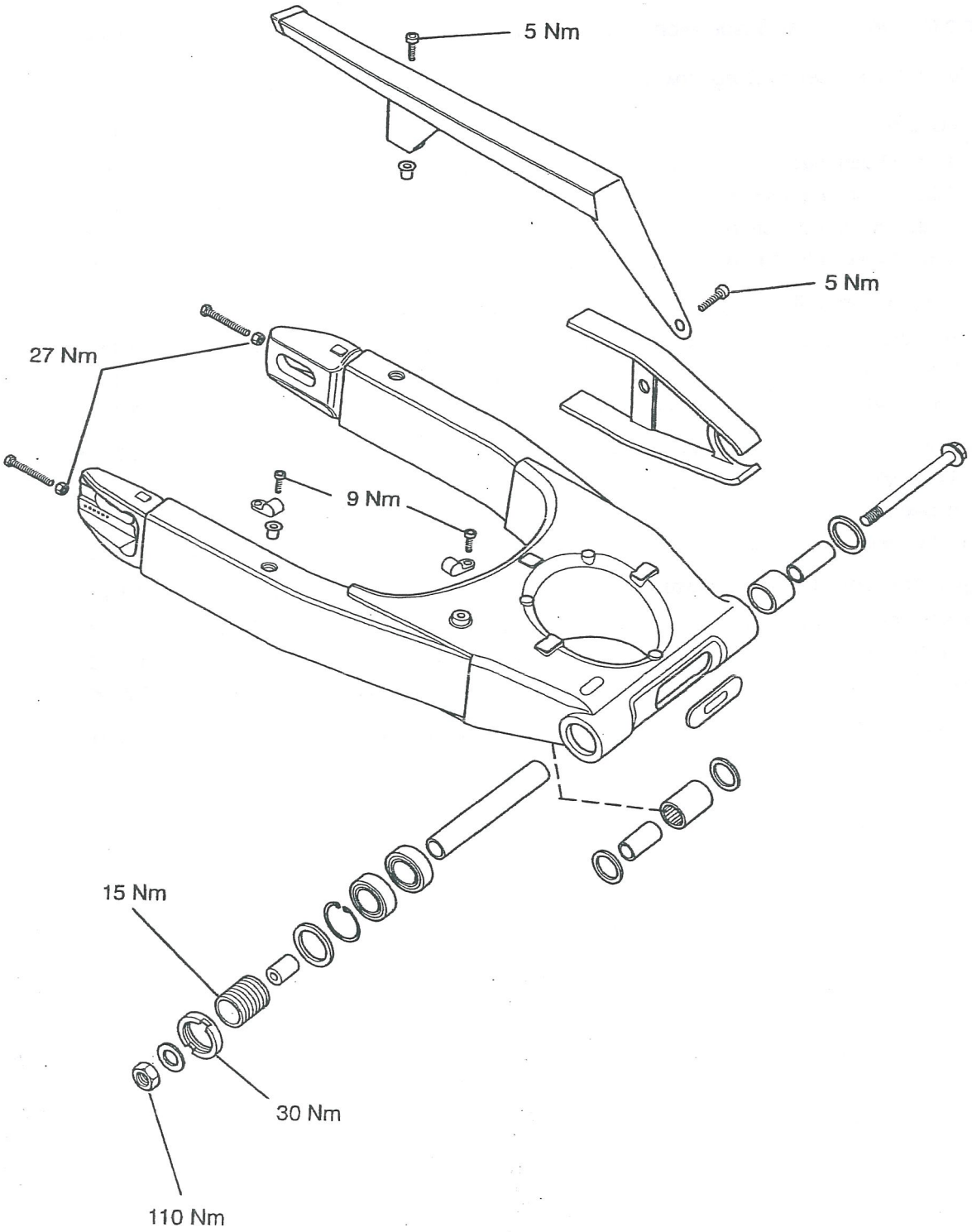

Exploded View - Rear Hub

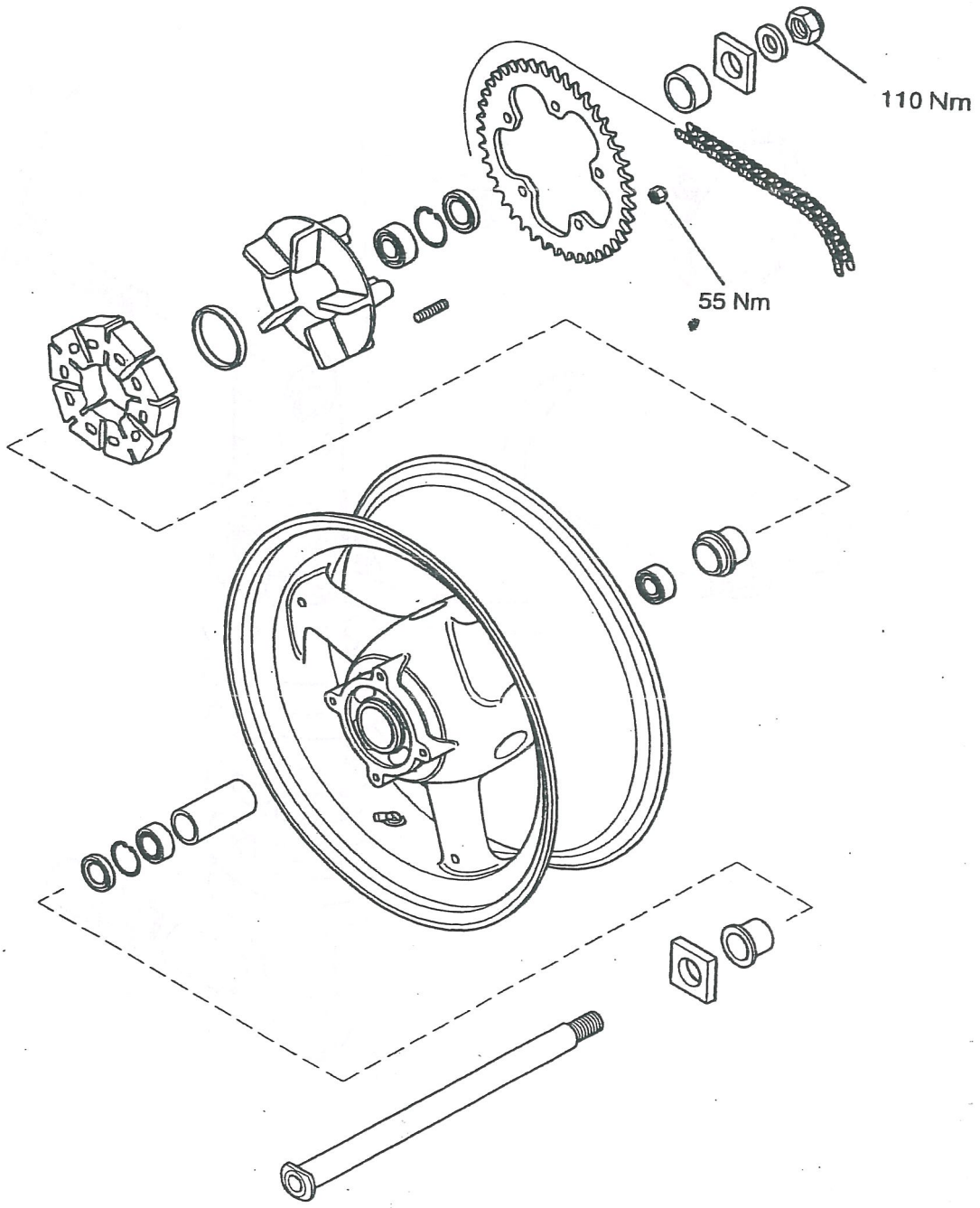

Exploded View - Rear Suspension Unit

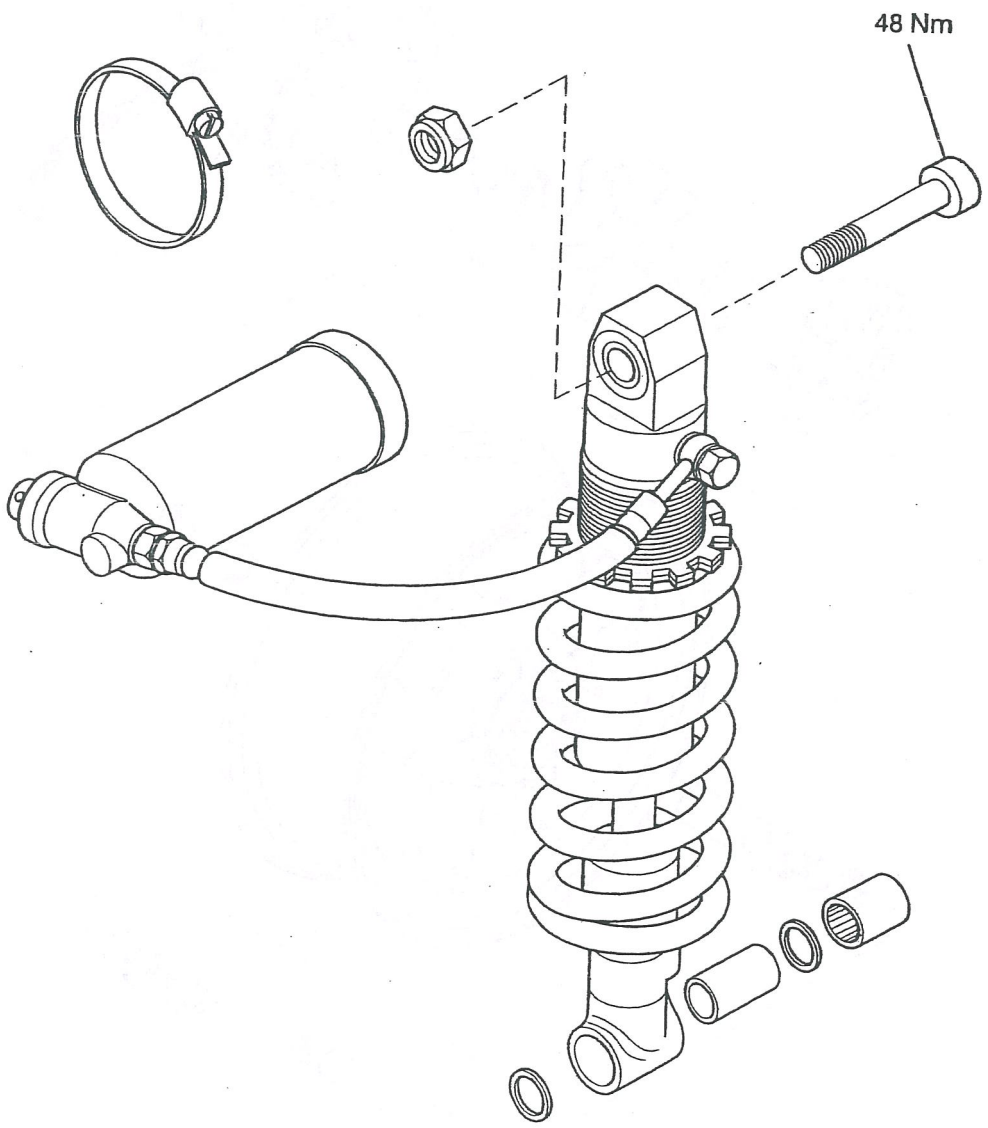

Exploded View - Drop/Drag Link

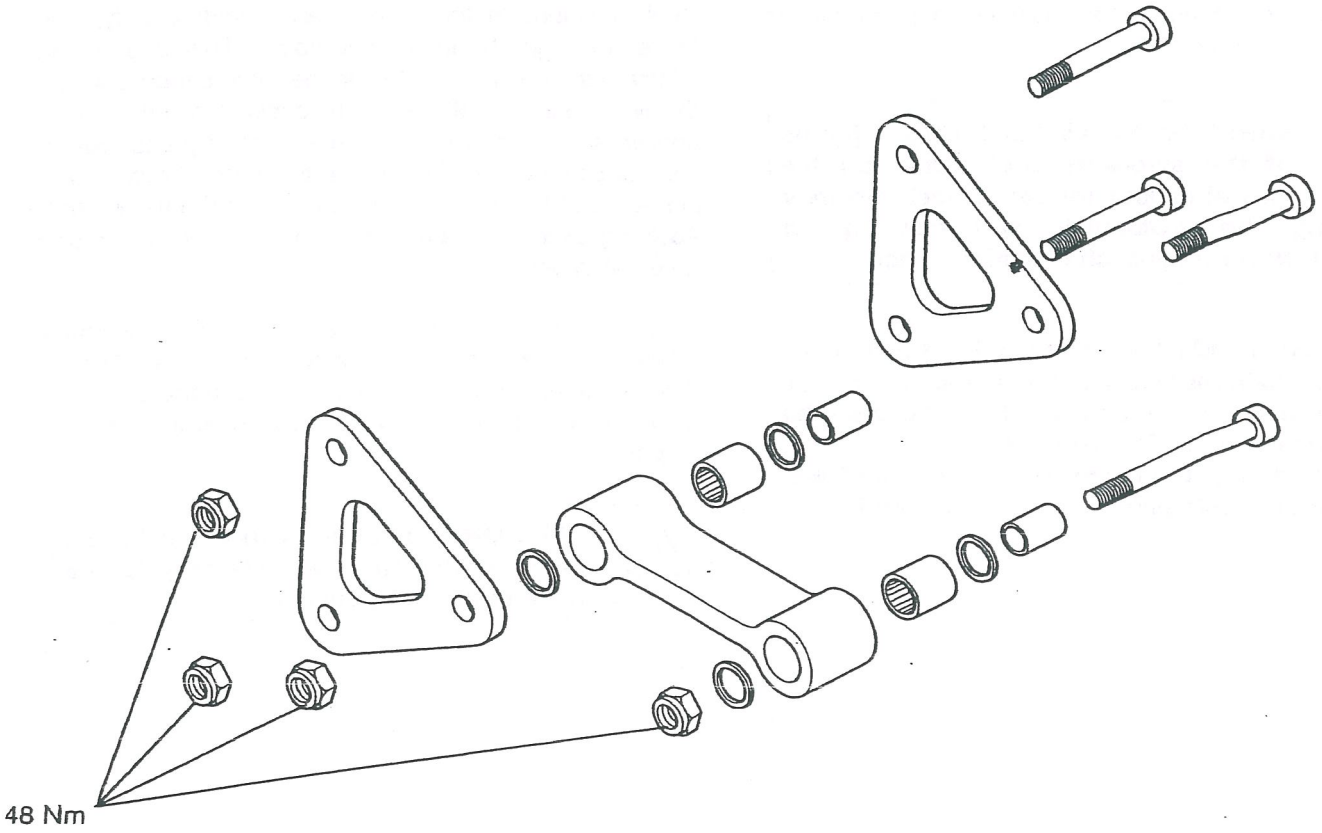

DRIVE CHAIN

For safety and to prevent excessive wear, the drive chain must be checked, adjusted, and lubricated in accordance with scheduled maintenance requirements. Checking, adjustment and lubrication must be carried out more frequently for extreme conditions such as salty or heavily gritted roads.

If the chain is badly worn or incorrectly adjusted (either too loose or too tight) the chain could jump off the sprockets or break.

WARNING: A chain that breaks or jumps off the sprockets could snag on the engine sprocket or lock the rear wheel, severely damaging the motorcycle and causing an accident. Never neglect chain maintenance.

NOTE:

- **Checking, adjustment and lubrication of the drive chain must ideally be carried out with the motorcycle set up on a paddock stand so that the rear suspension hangs free.**
  Alternatively, the chain may be adjusted with the motorcycle parked on the side stand

Chain Lubrication

Lubrication is necessary every 500 miles and also after riding in wet weather, on wet roads, or any time that the chain appears dry.

Use the special chain lubricant as recommended in the specification section.

Correct application method is critical for chain lubricant. Apply the lubricant for one full chain revolution only, then leave for eight hours before riding. This allows the lubricant's solvent (used to thin the oil) to evaporate and the oil to 'soak' into all parts of the chain. If the lubricant is applied and the motorcycle is ridden shortly afterwards, the lubricant is unlikely to reach the internal rollers and bushes and the majority will be flung off and wasted. Applying excessive amounts is not helpful under any circumstances.

It should be noted that the lubricant is applied to the chain to lubricate its action across the sprockets. In an 'O' ring chain, external lubrication does not penetrate to the bushes and rollers as the 'O' ring seal prevents this from happening.

CAUTION: Do not use a power 'jet' wash to clean the chain as this may cause damage to the chain components.

Chain Slack Inspection

WARNING: Before starting work, ensure the motorcycle is stabilised and adequately supported. This will help prevent it from falling and causing injury to the operator or damage to the motorcycle.

1. Position the motorcycle on the side stand.
2. Rotate the rear wheel to find the position where the chain has least slack. Measure the chain's vertical movement, mid-way between sprockets.
3. If correct, the vertical movement of the drive chain midway between the sprockets should be 25-35 mm.

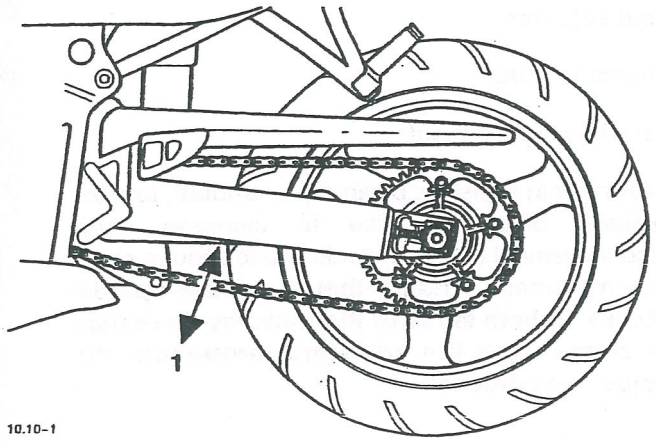

10.10-1

1. Vertical Movement 25-35 mm

Chain Wear Inspection

WARNING: Before starting work, ensu the motorcycle is stabilised a adequately supported. This will help prevent from falling and causing injury to the operator damage to the motorcycle.

1. Remove the chainguard from the swinging arm.
2. Stretch the chain taut by hanging a 10-20 kg (20-40 lb) weight on the chain.
3. Measure the length of 20 links on the straight par the chain from pin centre of the 1st pin to pin cen of the 21st pin. Repeat the test at various section the chain to establish an average reading. This because the chain may wear unevenly.

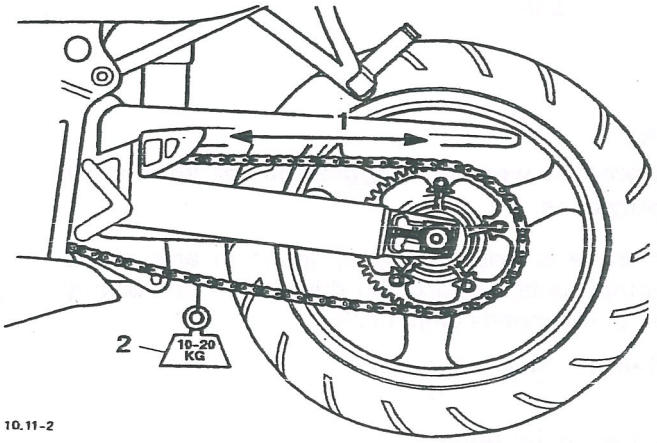

10.11-2

1. Measurement position

2. 10-20kg Weight

4. If the length exceeds the service limit of 321 mm, t chain must be replaced.

WARNING: Use a genuine Triumph supplied chain as specified in the Triumph Parts Catalogue. The use o non-approved chains may result in a broken chain or may cause the chain to jump off the sprockets. A chain that breaks or jumps off the sprockets could snag on the engine sprocket or lock the rear wheel, severely damaging the motorcycle and causing loss of motorcycle control and an accident.
Never neglect chain maintenance and always have chains installed by an authorised Triumph Dealer.

5. Examine the whole length of the chain. If there are any excessively tight or loose sections, loose pins or damaged rollers, the chain should be replaced.

6. Inspect sprockets for unevenly or excessively worn teeth. Also examine the sprockets for damaged teeth.

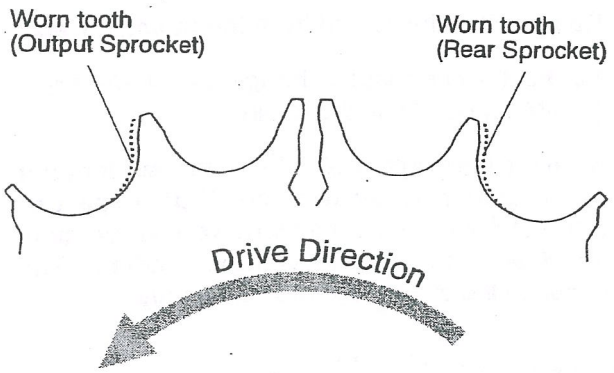

10.12-1

NOTE:

- **Sprocket wear is exaggerated for illustration purposes.**

7. If there is any irregularity found in any of the components, replace the drive chain and/or any other damaged components.

8. Refit the chain/wheel guard.

Drive chain adjustment

WARNING: Before starting work, ensure the motorcycle is stabilised and adequately supported. This will help prevent it from falling and causing injury to the operator or damage to the motorcycle.

Position the motorcycle on its side stand.

Loosen the rear wheel spindle nut.

3. Slacken the adjuster locknuts on each side of the swinging arm.

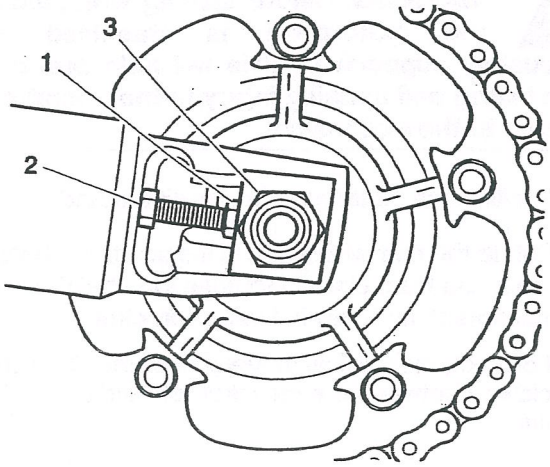

10.10-2

1. Chain adjuster

2. Adjuster locknut

3. Rear wheel spindle nut

4. Moving both adjusters by an equal amount, turn the adjuster bolts clockwise to increase chain free-movement and anti-clockwise to reduce chain free-movement. **Ensure that the wheel spindle blocks on both sides of the motorcycle remain in contact with the adjusters throughout the adjustment process.**

NOTE:

- **Check for equal adjustment on both sides using the graduation marks on the swinging arm.**

5. When the correct amount of chain free-movement has been set, push the wheel into firm contact with the adjuster. Tighten both adjuster locknuts to **27 Nm** and the rear wheel spindle nut to **110 Nm.**

6. Rotate the rear wheel and repeat the chain adjustment check. Re-adjust if necessary

WARNING: Operation of the motorcycle with insecure adjuster locknuts or a loose wheel spindle may result in impaired stability and handling. This impaired stability and handling may lead to loss of control or an accident.

7. Check the rear brake effectiveness.

REAR SUSPENSION UNIT

Removal

WARNING: Before starting work, ensure the motorcycle is stabilised and adequately supported. This will help prevent it from falling and causing injury to the operator or damage to the motorcycle.

1. Place the motorcycle on a paddock stand.
2. Remove the seat.
3. Disconnect the battery, negative (black) lead first.

WARNING: If the engine has recently been running, the exhaust system will be hot. Before working on or near the exhaust system, allow sufficient time for the exhaust system to cool as touching any part of a hot exhaust system could cause burn injuries.

4. Remove the lower fairings as detailed in the bodywork section.
5. Remove the exhaust system as detailed in the fuel system section.
6. Place a jack beneath the frame with two wooden blocks positioned so that the motorcycle can be lifted from beneath the frame outriggers.

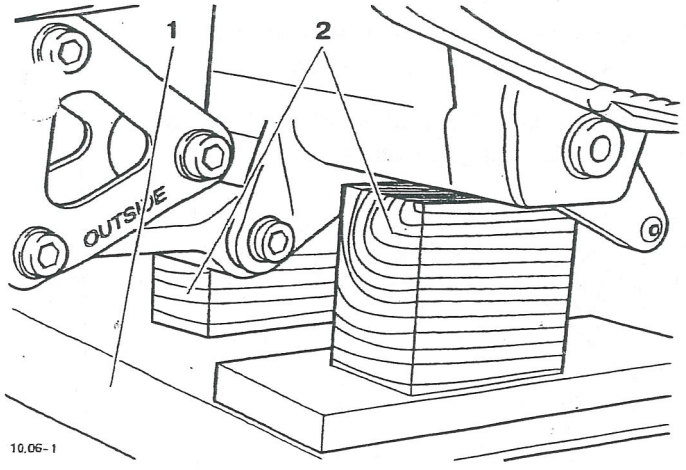

1. Jack

2. Wooden blocks

7. Raise the jack until the swinging arm is just clear of the paddock stand.
8. Remove the three drop link fixings as shown in the illustration below. Remove drop link plates and position the drag link clear.

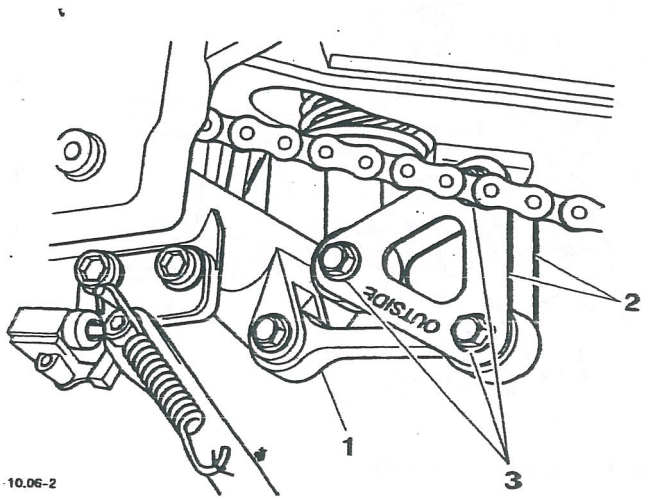

1. Drag link

2. Drop links

3. Fixings

WARNING: Never disconnect the reservoir from the rear suspension unit. It contains fluid under pressure and serious injury could result if any part of the system is disturbed.

9. Detach the rear suspension unit reservoir from the re-usable clip.

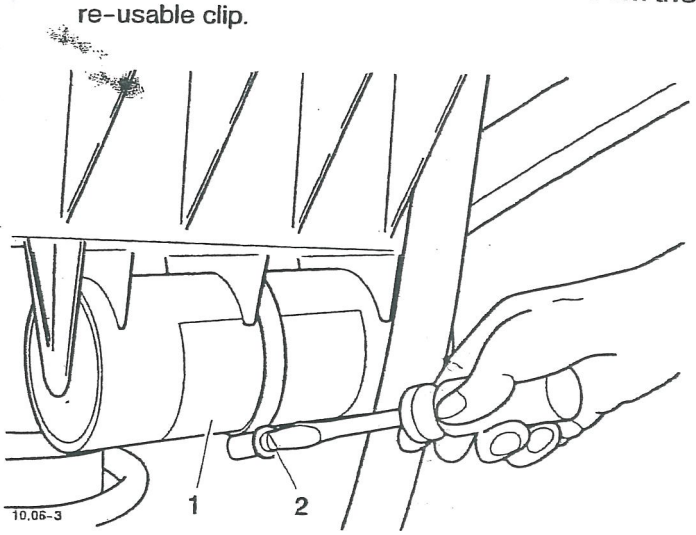

1. Reservoir

2. Securing clip

10. Remove the fixing from the suspension unit upper mounting.

11. Lower the rear suspension unit through the swinging arm.

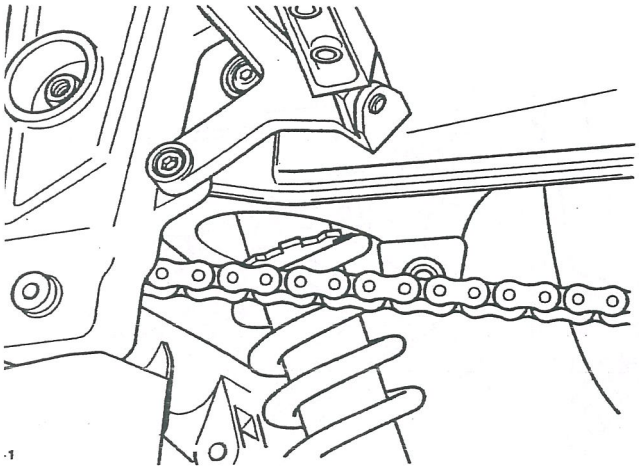

1

emoving the rear suspension unit.

spection

Clean all components and inspect for damage/wear to the rear suspension unit upper mounting, lower mounting, spacers and seals. Renew as necessary.

Inspect the reservoir hose for damage and check for fluid leaks from all parts of the unit. If there is any damage, or any leaks are evident, the unit must be replaced.

Check the drag link bearings, bushes and seals. Replace as necessary.

Installation

1. Remove the drag link sleeve and pack the bearing with fresh grease.
2. Refit the sleeve.
3. Remove the sleeve and pack the bearing in the rear suspension unit lower mounting with fresh grease.
4. Refit the sleeve.
5. Refit the rear suspension unit by sliding the reservoir up through the hole in the swinging arm, followed by the suspension unit itself. Secure the suspension unit at its upper mounting. Do not tighten the fixings at this stage.

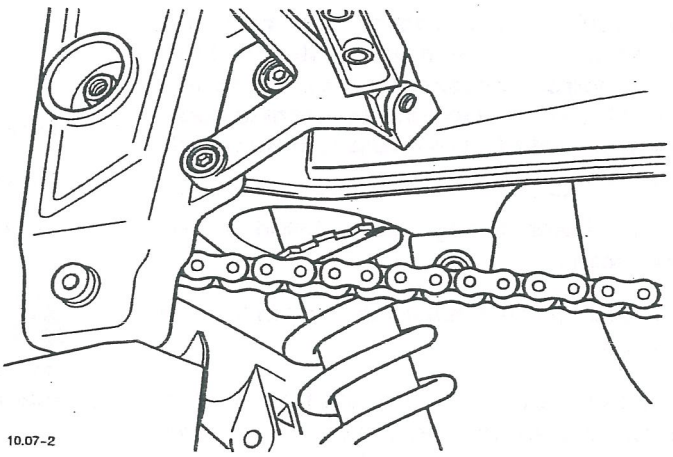

10.07-2

1. Rear suspension installation

6. Refit the rear suspension unit reservoir into its support bracket and secure with the clip.
7. Position the two drop link plates with the sides marked 'OUTSIDE' facing outwards.

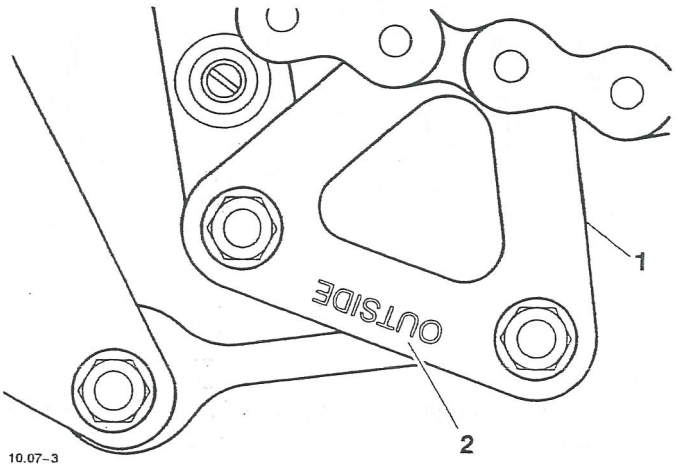

10.07-3

1. Drop link plate

2. 'OUTSIDE' marking

8. Locate with the fixing to the swinging arm.

9. Align the lower mounting of the rear suspension unit with the holes in the drop links. Refit the fixings.

10. Position the drag link and secure with the fixing to the drop links. Tighten the fixing to **48 Nm.**

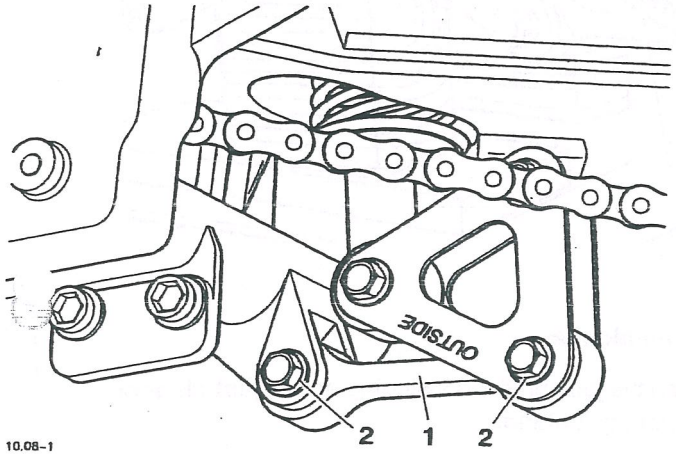

10.08-1

1. Drag link

2. Drag link fixings

11. Tighten the drop link to swinging arm fixing to **48Nm.**

12. Tighten the drop link to rear suspension unit fixing to **48 Nm.**

13. Lower the jack so that the weight of the motorcycle is taken on the paddock stand. Remove the wooden blocks and the jack.

14. Tighten the rear suspension unit upper fixings to **48 Nm.**

15. Refit the exhaust system as detailed in the fuel system section.

16. Refit the lower fairings as described in the bodywork section.

17. Connect the battery, red (positive) lead first.

18. Refit the seat.

19. Remove the paddock stand and place the motorcycle on its side stand.

DRAG LINK

Removal

WARNING: Before starting work, ensure the motorcycle is stabilised and adequately supported. This will help prevent it from falling and causing injury to the operator or damage to the motorcycle.

WARNING: If the engine has recently been running, the exhaust system will be hot. Before working on or near the exhaust system, allow sufficient time for the exhaust system to cool as touching any part of a hot exhaust system could cause burn injuries.

1. Place the motorcycle on a paddock stand.
2. Remove the seat.
3. Disconnect the battery, negative (black) lead first.
4. Remove the lower fairings as detailed in the bodywork section.
5. Remove the exhaust system as detailed in the fuel system section.
6. Place a jack beneath the frame with two wooden blocks positioned so that the motorcycle can be lifted from beneath the frame outriggers.

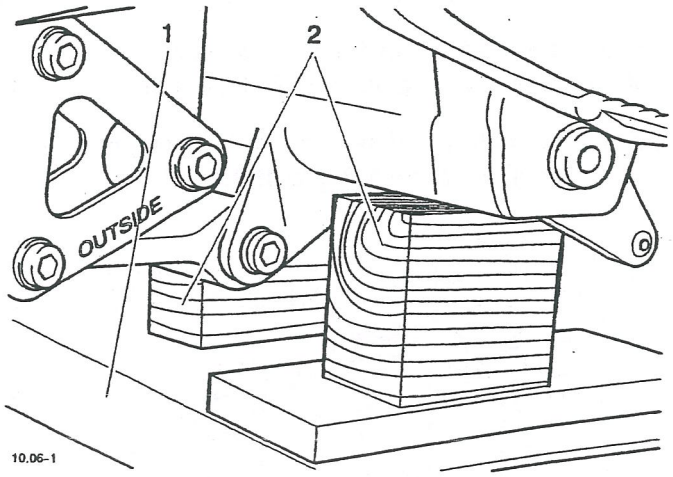

1. Jack

2. Wooden blocks

7. Raise the jack until the swinging arm is just clear of the paddock stand.
8. Remove the two fixings securing the drag link.
9. Remove the link.

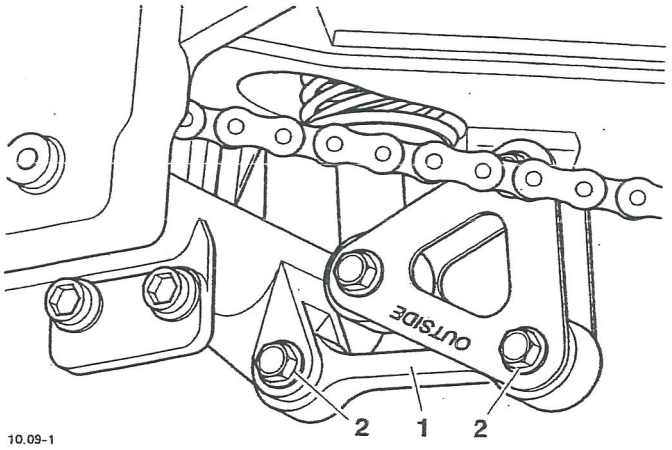

1. Drag link

2. Drag link fixings

Inspection

1. Clean all components and inspect for damage/wear to:

- Needle roller bearings,
- Sleeves,
- Seals,

NOTE:

- **If any of the above items are worn or damaged, they must be replaced with new components.**

Installation

1. Refit the drag link and tighten the fixings to **48 Nm.**
2. Lower the jack so that the weight of the motorcycle is taken by the paddock stand. Remove the wooden blocks and the jack.
3. Refit the exhaust system as described in the fuel system section.
4. Refit the lower fairings as described in the bodywork section.
5. Connect the battery, red (positive) lead first.
6. Refit the seat.
7. Remove the paddock stand and position the motorcycle on its side stand.

SWINGING ARM/DRIVE CHAIN RENEWAL

Removal

WARNING: Before starting work, ensure the motorcycle is stabilised and adequately supported. This will help prevent it from falling and causing injury to the operator or damage to the motorcycle.

1. Place the motorcycle on a paddock stand.
2. Remove the seat.
3. Disconnect the battery, negative (black) lead first.

WARNING: If the engine has recently been running, the exhaust system will be hot. Before working on or near the exhaust system, allow sufficient time for the exhaust system to cool as touching any part of a hot exhaust system could cause burn injuries.

4. Remove the lower fairings as detailed in the bodywork section.
5. Remove the exhaust system as detailed in the fuel system section.
6. Place a suitable jack beneath the frame with two wooden blocks positioned so that the motorcycle can be lifted from beneath the frame.

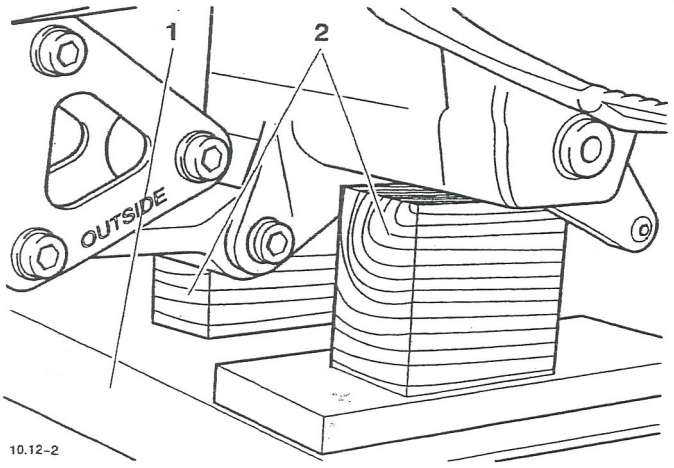

1. Jack

2. Wooden blocks

7. Raise the jack until the swinging arm is just clear of the paddock stand.
8. Remove the rear wheel, rear brake caliper, brake hose clips and chain guard as described in the wheels and tyres section.

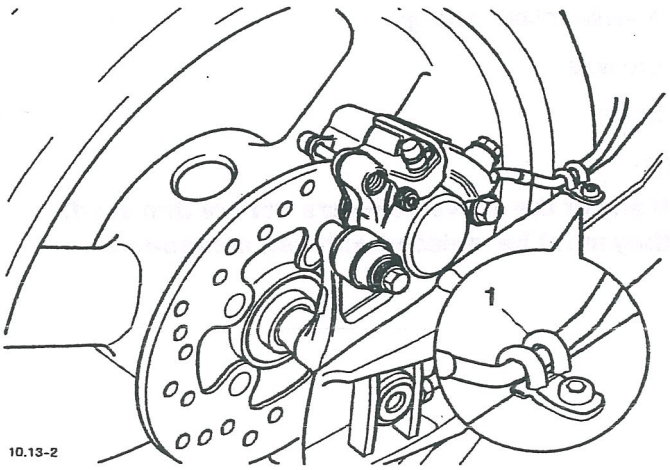

1. Brake hose clip

9. Remove the three drop link fixings as shown in the illustration below. Detach the drag link and remove both drop link plates.

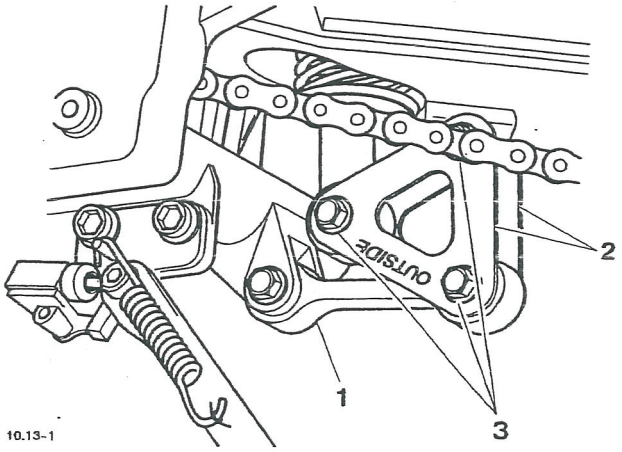

1. Drag link

2. Drop links

3. Fixings

NOTE:

- **It is not necessary to disconnect the brake pipe union from the caliper.**

10. If replacing the chain, remove the sprocket cover.

11. Remove the locknut and washer from the right hand end of the swinging arm spindle.

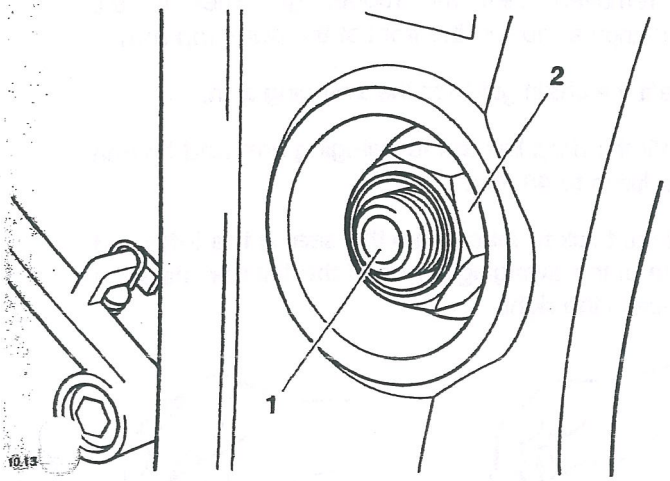

1. Spindle

2. Spindle locknut

12. Using special tool, part number T3880350, remove the lock ring from the end float adjuster.

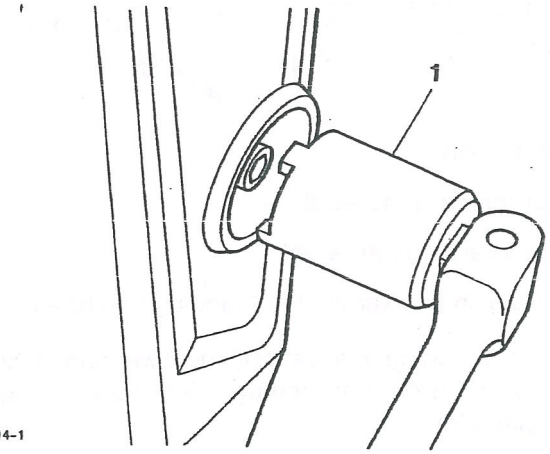

1. Special tool T3880350

13. Using special tool, part number T3880355, slacl the end float adjuster.

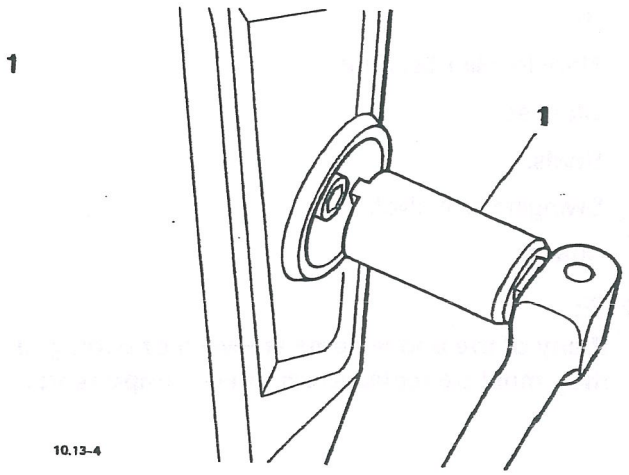

1. Special tool T3880355

14. Remove the paddock stand.

15. Whilst supporting the swinging arm, remove tl swinging arm spindle from the left hand side of tl motorcycle.

16. Remove the swinging arm sliding the chain over tl left hand swinging arm beam.

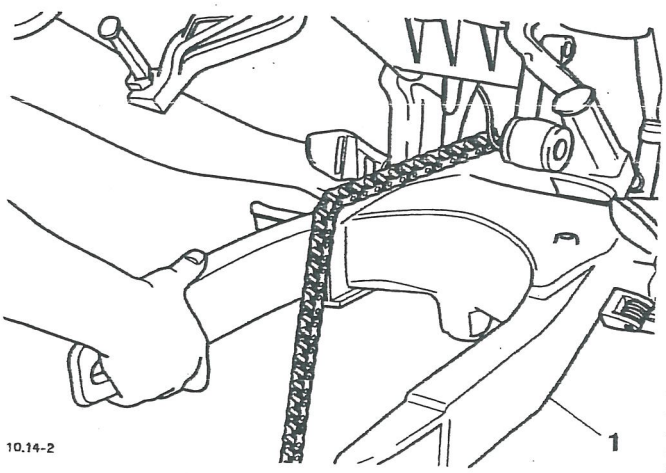

1. Swinging arm

17. Collect the spacers from the seals in both sides (the swinging arm.

18. Remove the rubber chain guide, chain, drag lin and rectangular rubber grommet from the swingin arm.

Inspection

1. Clean all components and inspect for damage/wear to:

- Needle roller bearings.
- Sleeves.
- Seals.
- Swinging arm pivot.
- Spacer.

NOTE:

- **If any of the above items are worn or damaged, they must be replaced with new components.**

Installation

1. If removed, refit the rubber grommet to the rectangular hole in the front of the swinging arm.
2. Refit the chain guide to the swinging arm.
3. Refit the drag link to the swinging arm and tighten the fixing to **48 Nm.**
4. Fit the thicker spacer into the seal in the left hand side of the swinging arm and the thinner distance piece in the right.

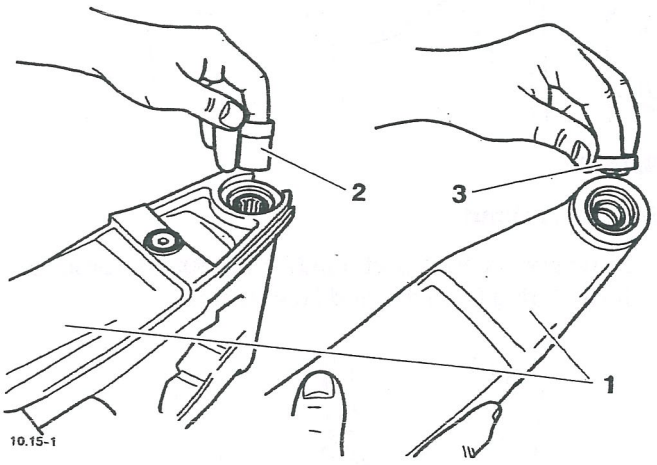

1. Swinging arm

2. Thicker spacer (left side)

3. Thinner spacer (right side)

5. Loop the chain over the left swinging arm beam.
6. Refit the swinging arm, passing the lower part of the rear suspension unit through the hole in the swinging arm.

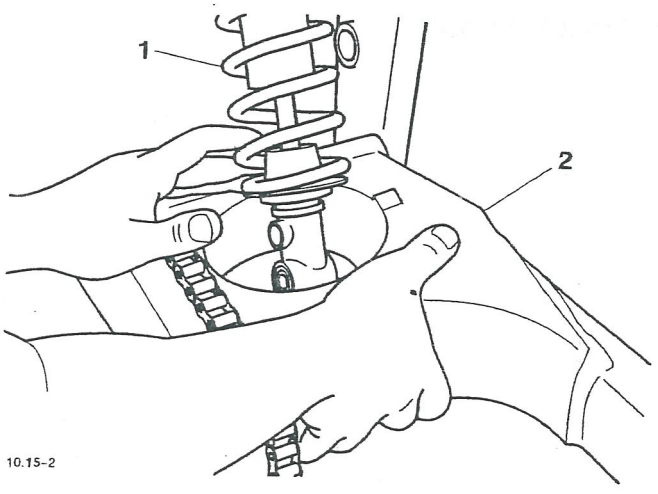

1. Rear suspension unit

2. Swinging arm

7. Align the swinging arm to the frame and refit the swinging arm spindle from the left hand side.

8. Refit the end float adjuster to the right hand frame outrigger and, using special part tool T3880355, tighten to **15 Nm.**

9. Refit the end float adjuster lock ring and, using special tool part number T3880350, tighten to **30 Nm.**

10. Refit the plain washer to the swinging arm spindle followed by the locknut. Tighten to **110 Nm.**

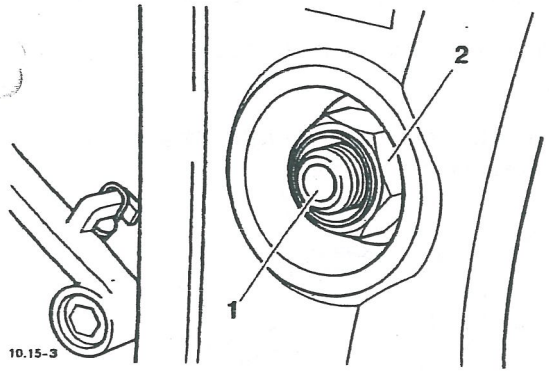

1. Spindle

2. Spindle locknut

11. If previously removed, refit the chain to the output sprocket.

12. Position the two drop link plates with the word 'OUTSIDE' facing outwards. Secure with the fixing to the swinging arm. Do not tighten at this stage.

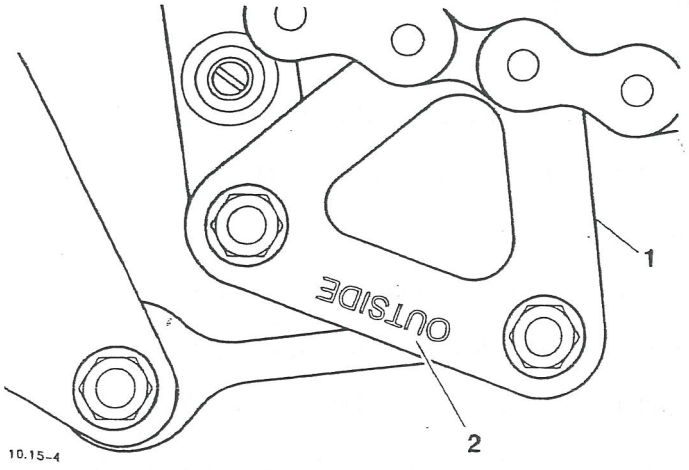

Drop link plate

2. 'OUTSIDE' marking

13. Reposition the paddock stand below the swing arm.

14. Using the jack to adjust the height of the frame, al the lower mounting of the rear suspension unit v the holes in the drop links and rear suspension u Refit the fixing.

15. Align the drag link to drop links.

16. Tighten all three drop link fixings to **48 Nm.**

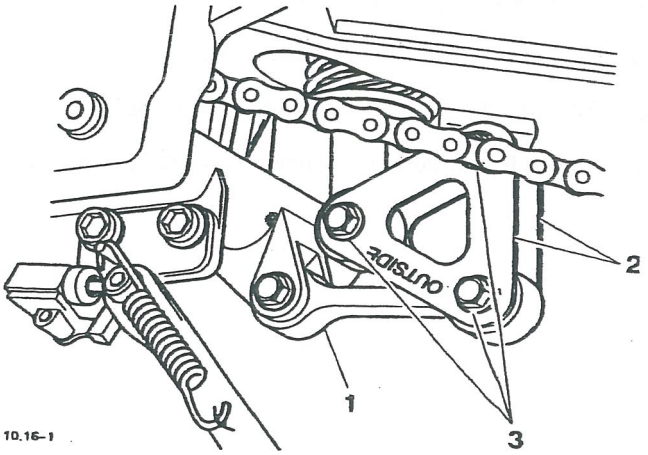

1. Drag link

2. Drop link

3. Fixings

17. Lower the jack so that the weight of the motorcyc is taken on the paddock stand. Remove th wooden blocks and the jack.

18. Refit the rear wheel, rear brake caliper, calip carrier and chain guard as described in the releva sections.

19. Refit the brake hose clips to the swinging arm an tighten to **7 Nm.**

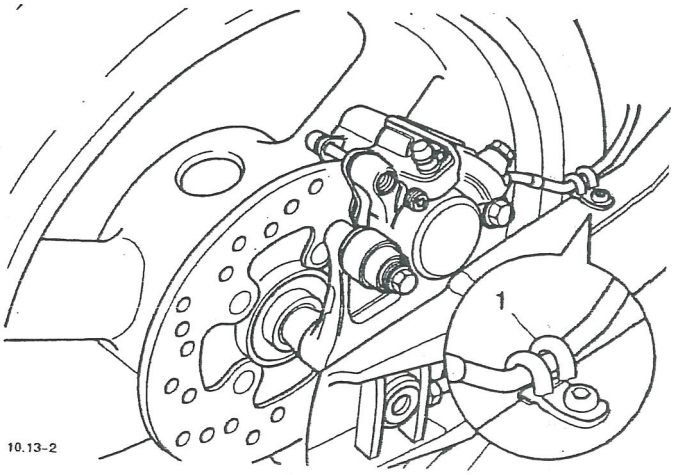

1. Brake hose clip

20. If removed, refit the sprocket cover.
21. Refit the exhaust system as described in the fuel system section.
22. Refit the lower fairing as described in the bodywork section.
23. Connect the battery, red (positive) lead first.
24. Refit the seat.
25. Remove the paddock stand.
26. Check the rear brakes effectiveness.
27. Position the motorcycle on its side stand.
28. Check the drive chain tension. Adjust if necessary.

FINAL DRIVE

Removal

1. Raise and support the rear of the motorcycle.

WARNING: Before starting work, ensure the motorcycle is stabilised and adequately supported. This will help prevent it from falling and causing injury to the operator or damage to the motorcycle.

2. Remove the seat.
3. Disconnect the battery, negative (black) lead first.
4. Remove the rear wheel as described in the wheel section.
5. Gently lever the drive flange from the wheel hub and remove the cush drive rubbers.

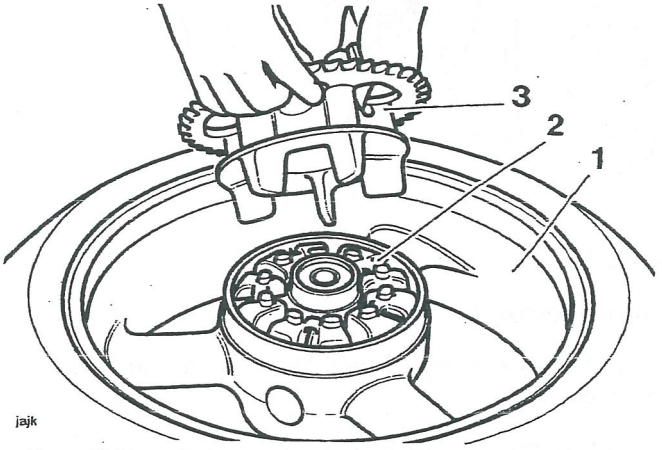

1. Rear Wheel

2. Cush Drive Rubbers

3. Drive Flange

Inspection

1. Check the rubbers for deterioration, cracks etc.
2. Check the wheel and drive flange for cracks.

Installation

1. Install the cush drive rubbers into the wheel.
2. Refit the drive flange to the rubbers/wheel.
3. Refit the wheel as described in the wheel section.
4. Lower the motorcycle to the ground and place on the side stand.
5. Reconnect the battery positive (red) lead first.
6. Refit the seat.

FRONT SUSPENSION

CONTENTS

	Page
Exploded View - Front Fork	11.2
Exploded View - Handlebars	11.3
Front Suspension	11.4
Fork Inspection	11.4
Front Fork	11.4
Removal	11.4
Installation	11.5
Fork Oil	11.6
Oil change	11.6
Using the tool	11.7
Fork Oil Level Chart	11.8
Front Fork	11.9
Dismantling	11.9
Inspection	11.11
Assembly	11.11
Headstock Bearing Check / Adjustment	11.13

Exploded View - Front Fork

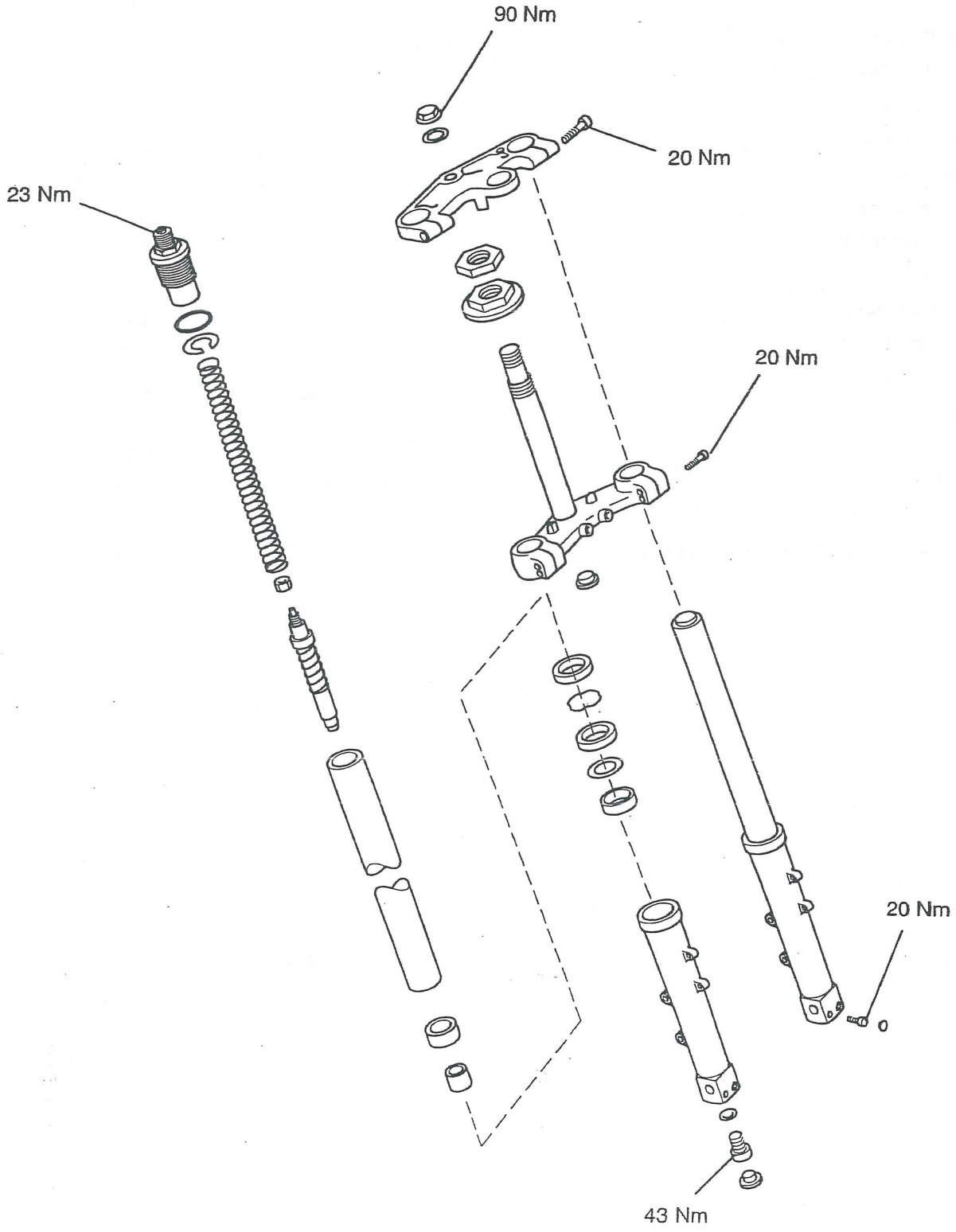

Exploded View - Handlebars

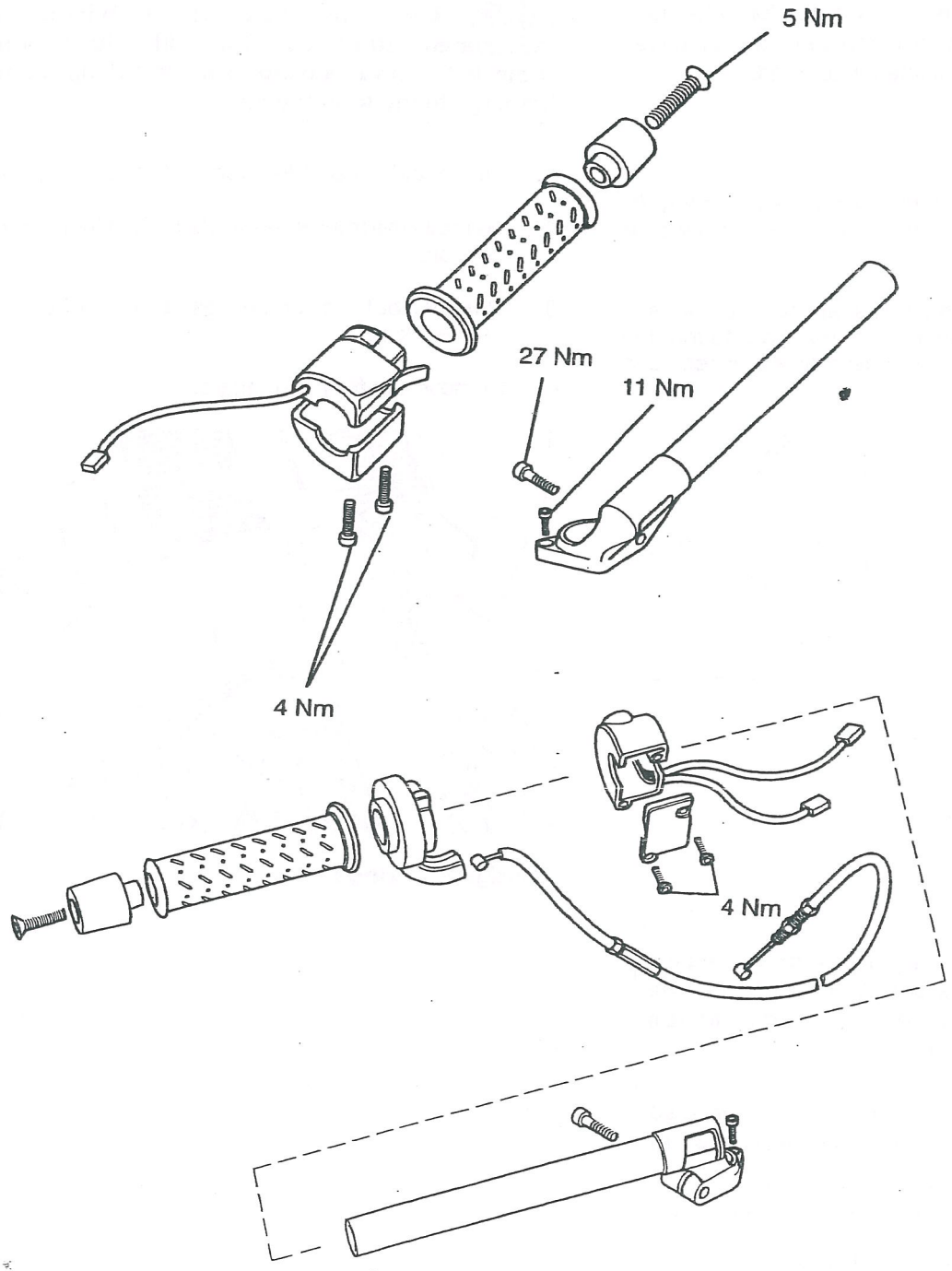

FRONT SUSPENSION

This model is equipped with hydraulic, telescopic front forks which are fully adjustable for spring pre-load, rebound and compression damping. Periodic inspection for damage and fluid leaks is essential for safe riding. Always follow the inspection instructions at the intervals stated in the scheduled maintenance chart.

FORK INSPECTION

1. Visually inspect the fork inner tube assembly for stone-chips and damage. Repair or replace as necessary.

2. Visually inspect the dust/oil seal areas for signs of damage and fluid leaks. If oil leaks are found, the fork must be stripped and overhauled or replaced completely.

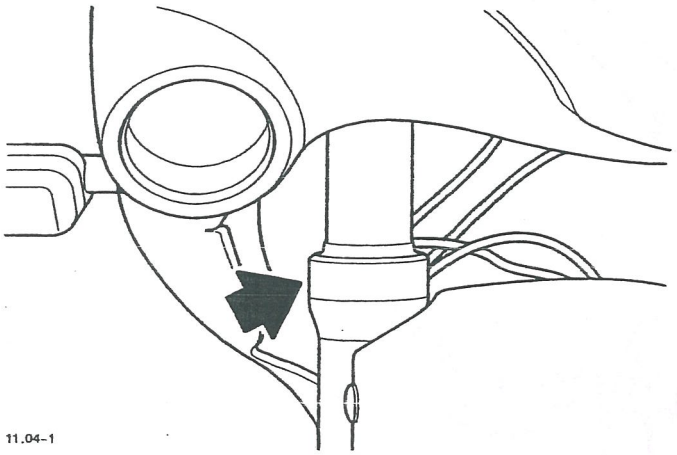

Arrowed: Fork Seal Area

WARNING: If roughness or excessive stiffness is detected, investigate the cause and take the necessary remedial action before riding the motorcycle.

Riding the motorcycle with defective or damaged suspension can cause loss of control and an accident.

3. Check for smooth operation of the forks as follows:

- Place the motorcycle on level ground.

- While holding the handlebars and applying the front brake, pump the forks up and down several times. The forks should operate smoothly with no excessive stiffness, roughness or tight spots

FRONT FORK

Removal

WARNING: Before staring work, ensure the motorcycle is stabilised and adequately supported. This will help prevent it from falling and causing injury to the operator or damage to the motorcycle.

1. Raise and support the front of the motorcycle.

2. Remove the front wheel as described in the 'wheels' section.

3. Remove both lower fairings as described in the bodywork section.

4. Remove the front mudguard.

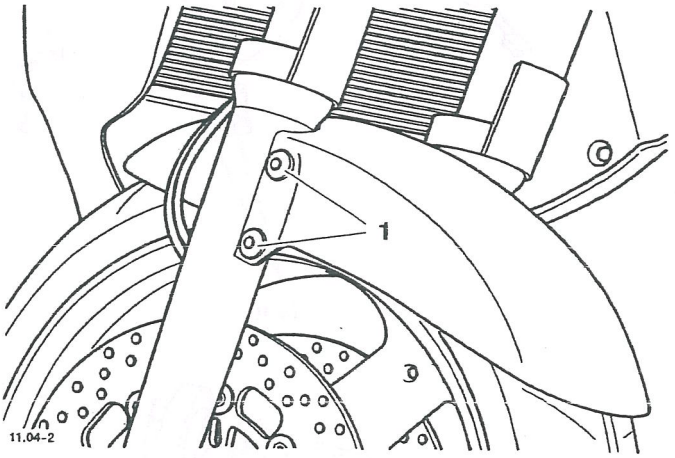

1. Mudguard fixings

5. Slacken the handlebar fixings.

NOTE:

- **It is not necessary to remove the handlebars.**

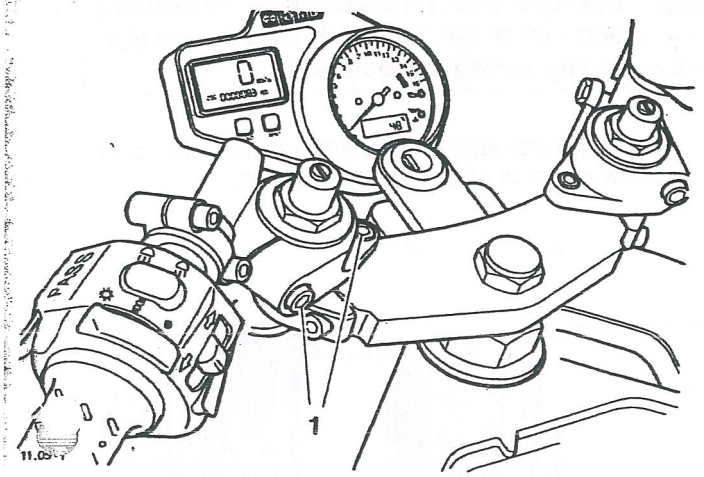

1. Handlebar fixings

NOTE:

- **If the fork is to be dismantled, slacken the fork cap before releasing the yoke clamps.**

6. Slacken but do not remove the pinch bolts on the top and bottom yokes and, using a downward twisting motion, slide the fork out of the yokes.

Installation

1. Fit the forks into the yokes and adjust the fork pi through to that shown in the chart later in th section.
2. Tighten the top and bottom yoke pinch bolts to 2 **Nm.**
3. Tighten the handlebar-to-fork clamp bolts to **27 Nm**
4. Tighten the handlebar-to-yoke fixings to **11 Nm.**

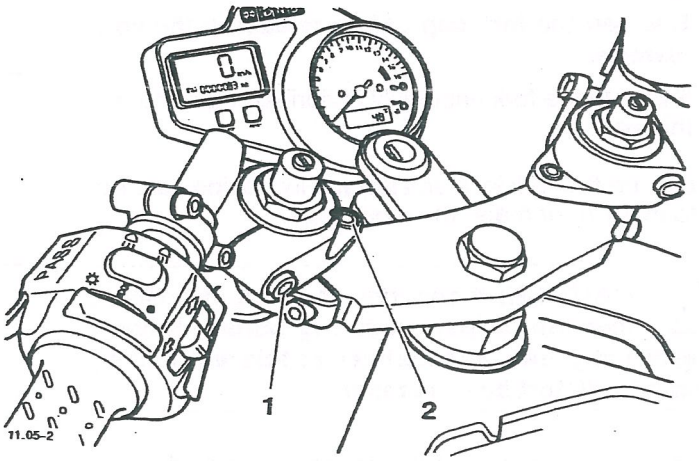

1. Handlebar-to-fork clamp bolts

2. Handlebar-to-yoke fixings

5. Refit the mudguard. Tighten the mudguard fixings to **3 Nm.**
6. Refit the lower fairings as described in the body section.
7. Refit the front wheel as described in the wheel section.
8. Lower the motorcycle to the ground and place on the sidestand.

FORK OIL

Oil change

WARNING: Before staring work, ensure the motorcycle is stabilised and adequately supported. This will help prevent it from falling and causing injury to the operator or damage to the motorcycle.

NOTE:

- **Slacken the fork cap before releasing the yoke clamps.**

1. Remove the fork assembly described elsewhere in this section.
2. Secure the fork in a soft jawed vice taking care not to mark or damage the mountings.

CAUTION: If securing the fork in a vice, use the caliper mounting points. Never clamp directly onto the tube itself as this will cause the tube to distort beyond repair.

3. Record the position of the spring preload adjuster. This setting must be retained on re-assembly.

WARNING: Do not change the compression and rebound adjuster settings. If they are changed, this will affect the handling of the motorcycle from those which the rider is familiar with. Riding with unfamiliar fork settings may cause unexpected handling characteristics leading to loss of motorcycle control and an accident.

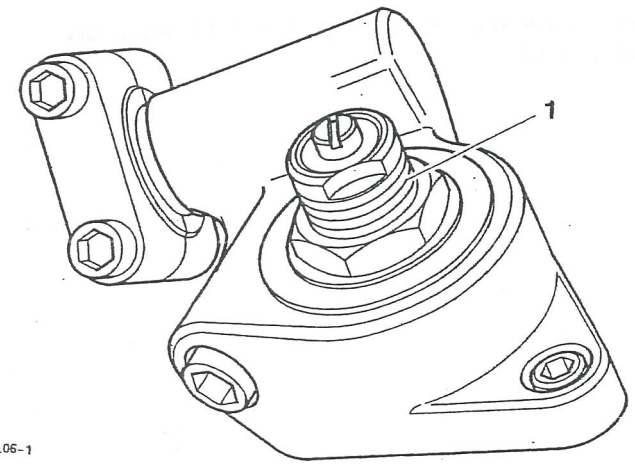

11.06-1

1. Preload adjuster marks

4. Remove the top cap.

WARNING: The fork cap will spring clear due to internal spring tension. To prevent injury, always wear eye, face and hand protection when removing spring loaded items.

5. Using hand pressure only, compress the fork spring to allow removal of the slotted washer.

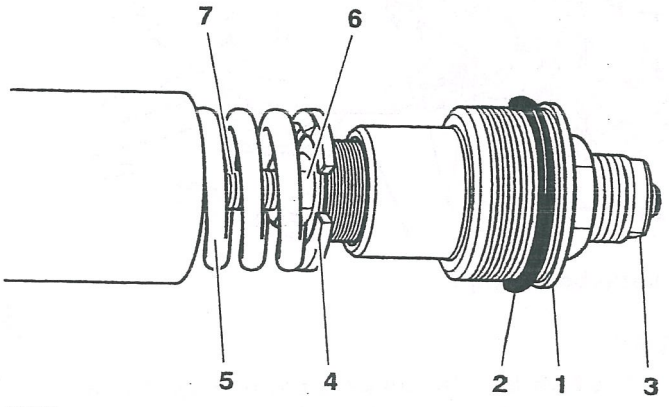

11.06-2

1. Top cap

2. Top cap O ring

3. Preload adjuster

4. Slotted washer

5. Spring

6. Locknut

7. Damper rod

NOTE:

- **Before releasing the locknut on the damper rod, note the number of visible threads below the locknut. During re-assembly, the same number of visible threads must still be present after tightening the locknut.**

6. Slacken the locknut and remove the top cap from the damper rod. Discard the top cap 'O'-ring.
7. Remove the fork spring.
8. Invert the fork assembly and allow all the oil to drain into a suitable container. Pump the fork several times to ensure all the oil has been drained.
9. Turn the fork back to an upright position.
10. Fill the fork with the grade of oil specified in the fork oil table, to a level above that which will finally be required.

11. Set the scale on tool 3880160-T0301 to the level specified in the fork oil table.

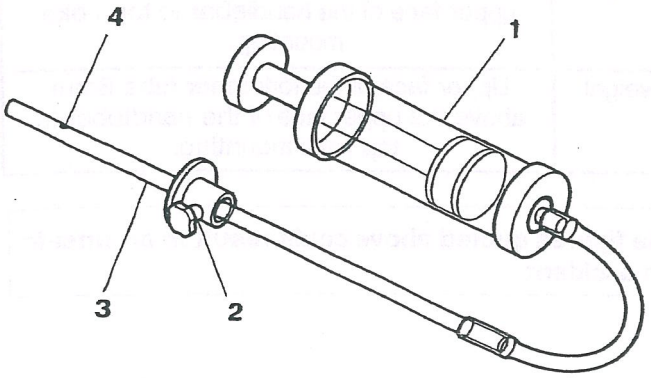

11.07-1

1. Tool 3880160-T0301
2. Adjustment plate
3. Scale area
4. Hole (zero position)

NOTE:

- **Zero level on the tool is set at the small exit hole in the side of the scale tube, NOT AT THE END TIP. Do not attempt to block this side hole as this will cause the final fluid level to be incorrect.**

12. Operate the fork several times to expel any trapped air from the valves, then **fully compress the fork.**
13. Insert the scale end of the tool into the fork inner tube.
14. Hold the tool adjuster plate level with the upper surface of the fork inner tube and draw fluid into the syringe until fluid flow ceases (empty the syringe if the body becomes full before fluid flow stops).
15. The fluid level in the fork is now set to the height set on the tool scale. Check the tool scale setting and repeat the process if incorrectly set.
16. Fit a new 'O' ring to the top cap.
17. Reassemble the fork components in the reverse order in which they were removed.

NOTE:

- **Ensure that the damper rod locknut is returned to the same position as prior to removal.**

18. Refit the fork and tighten the top cap to **23 Nm.**
19. Reset the spring pre-load.

Using the tool

WARNING: Incorrect tool adjustme and/or failure to keep the tool level wi the fork inner tube will affect the final fluid lev setting.

Incorrect fork oil levels could result in an unsa riding condition leading to loss of control and a accident.

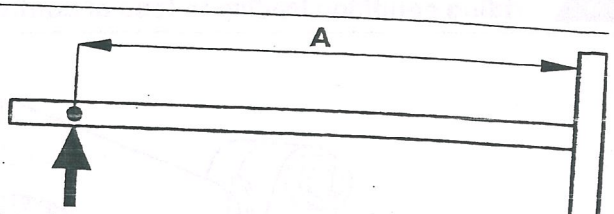

Zero level measured from oil hole
Set dimension 'A' to the required oil level

TEC11.07-2

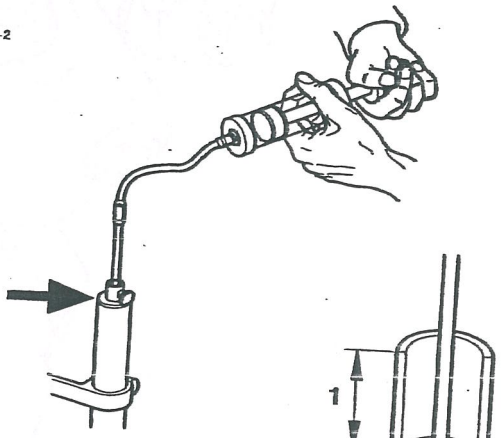

TEC11.07-3

Plate arrowed must be level with fork slider

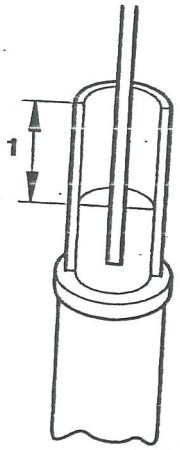

TEC11.07-4

1. Fork oil level setting (fork fully compressed)

FORK OIL LEVEL CHART

Model	Oil Level	Oil Volume	Oil Grade	Fork Pull Through
TT600	132 mm	455 cc	10 weight	Upper face of the fork inner tube flush with upper face of the handlebar to top yoke mounting.
Speed Four	132 mm	455 cc	10 weight	Upper face of the fork inner tube 6mm above the upper face of the handlebar to top yoke mounting.

WARNING: Any variation in fork oil level from the figures quoted above could result in an unsafe riding condition leading to loss of control and an accident.

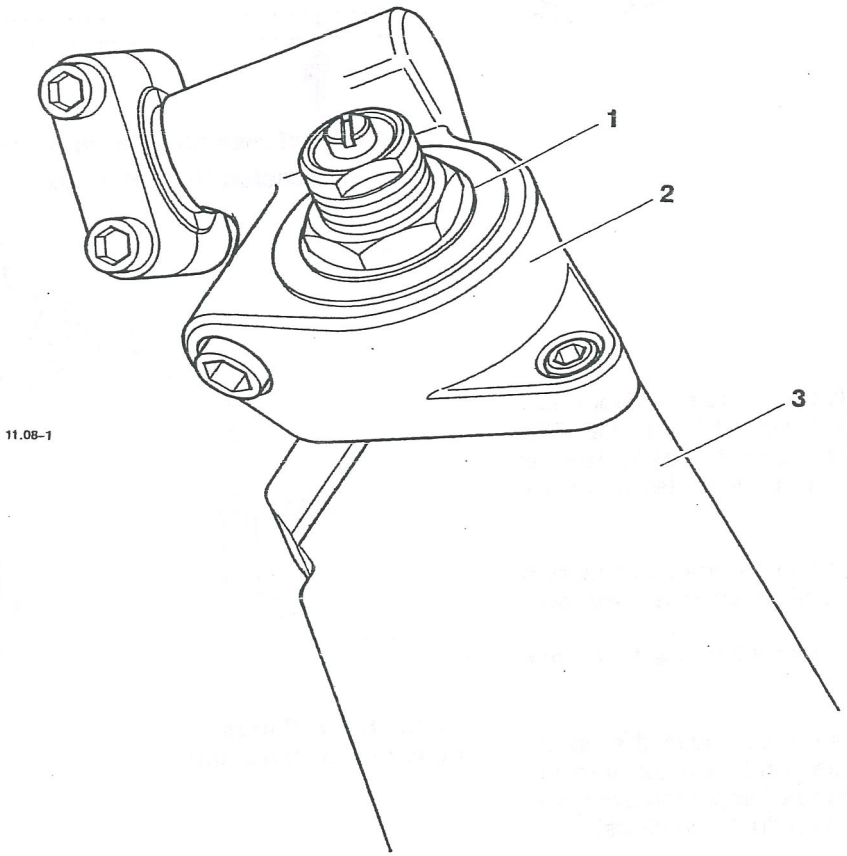

1. Fork inner tube
2. Handlebar to yoke mounting
3. Top yoke

FRONT FORK

Dismantling

1. Remove the fork assembly as previously described.

NOTE:

- **To aid removal, slacken but do not remove the top cap before releasing the fork from the yoke.**

CAUTION: When securing the fork in a vice use the caliper mounting points. Never clamp directly onto the tube itself as this will cause the tube to distort beyond repair.

2. Secure the fork in a soft jawed vice taking care not to mark or damage the mountings.

WARNING: Do not change the compression and rebound adjuster settings. If they are changed, this will affect the handling of the motorcycle from those which the rider is familiar with. Riding with unfamiliar fork settings may cause unexpected handling characteristics leading to loss of motorcycle control and an accident.

3. Record the position of the spring preload adjuster. This setting must be retained on re-assembly.

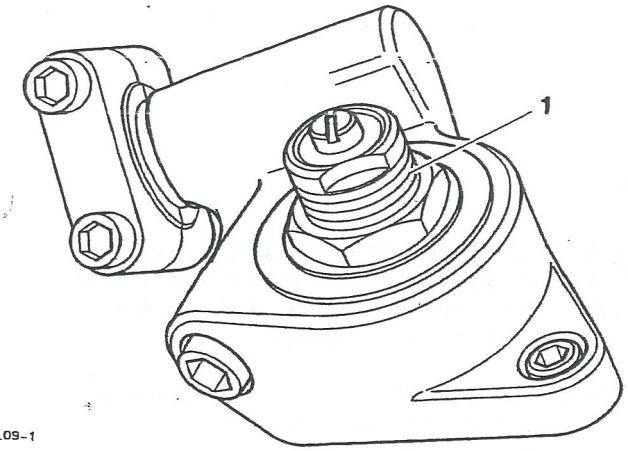

11.09-1

1. Preload adjuster marks

WARNING: The fork cap will spring clear due to spring tension. To prevent injury, always wear eye, face and hand protection when removing spring loaded items.

4 Release the fork cap from the inner tube.

5 Using hand pressure only, compress the fork spring to allow removal of the slotted washer.

6. Slacken the locknut and remove the top cap fro the damper rod. Discard the top cap 'O' ring.

NOTE:

- **When releasing the locknut, do not hold th hexagonal portion of the top cap. Instead us the two flats used to change the preload setting**

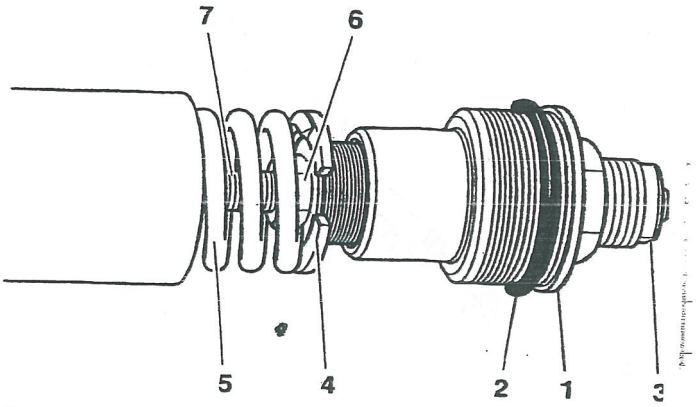

11.09-2

1. Top cap

2. Top cap 'O' ring

3. Preload adjuster

4. Slotted washer

5. Spring

6. Locknut

7. Damper rod

7. Remove the locknut.

8. Remove the damper tube from inside the damper rod.

9. Remove the fork spring.

10. Invert the fork assembly and drain the oil into a suitable container for re-use. Turn the fork back to an upright position.

11. Return the fork to the vice.

12. Slide the square end of service tool 3880090-T0301 over the damper rod and turn until a positive engagement is felt in the cylinder

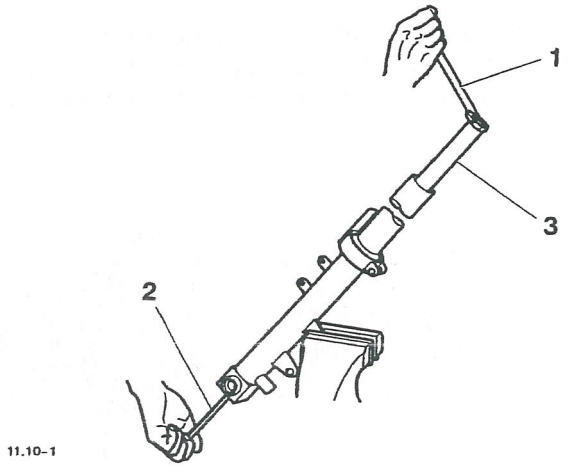

11.10-1

1. Spanner

2. Allen key

3. Tool 3880090-T0301

13. Hold the hexagonal end of service tool 3880090-T0301 with a spanner.

14. With the service tool preventing damper rotation, remove the capscrew from the base of the fork using an allen key.

15. Remove the copper washer from the capscrew and discard.

16. Remove the special tool.

17. Withdraw the damper assembly.

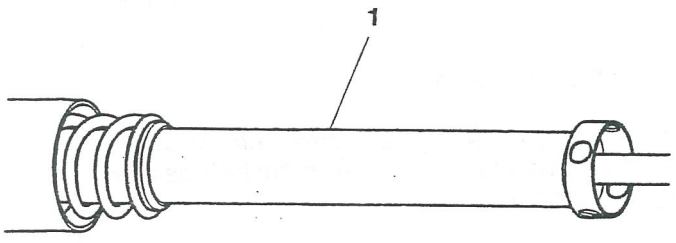

11.10-2

1. Damper assembly

18. Ease the dust seal up the fork inner tube.

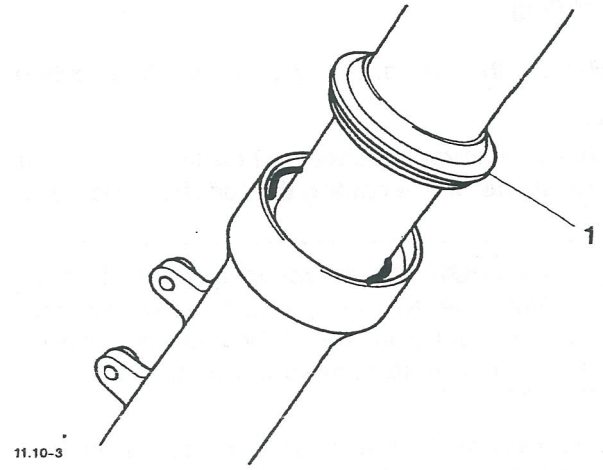

11.10-3

1. Dust seal

19. Remove the circlip from beneath the dust seal.

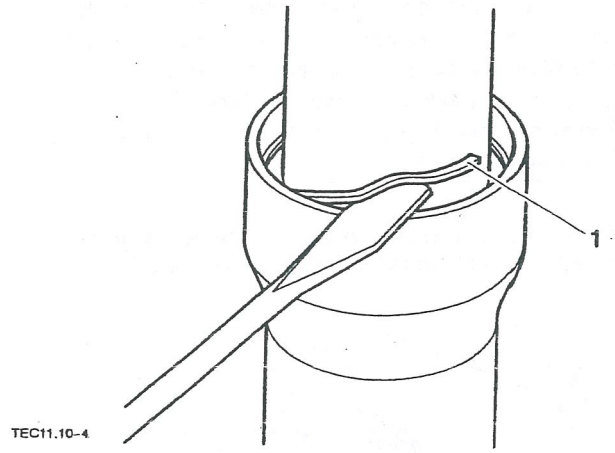

TEC11.10-4

1. Circlip

20. Using a sharp upward movement of the inner tube against the outer, withdraw the inner fork tube from the outer tube complete with the oil seal, oil seal washer, upper and lower bearings.

21. Discard the oil seal and remove the washer and upper bearing from the inner fork tube.

CAUTION: Do not attempt to remove the lower bearing from the inner tube as this will damage the bearing.

22. Remove the fork from the vice, invert the fork and collect the oil lock assembly and any remaining oil.

Inspection

1. Thoroughly clean and examine all components for damage, wear, scoring, corrosion etc. Renew as necessary.
2. Renew the oil and dust seals.

Assembly

WARNING: The front forks comprise many precision machined parts. Total cleanliness must be observed at all times and, assembly must take place in a dirt/dust-free environment.

Dirt ingress may cause damage to the fork parts, leading to incorrect operation, instability, loss of control or an accident.

NOTE:

- **During assembly of the fork, tool 3880080-T0301 will be used extensively. In the text, reference to a plain end and a recessed end will be made. This describes the two ends of the tool, as shown in the illustration below.**

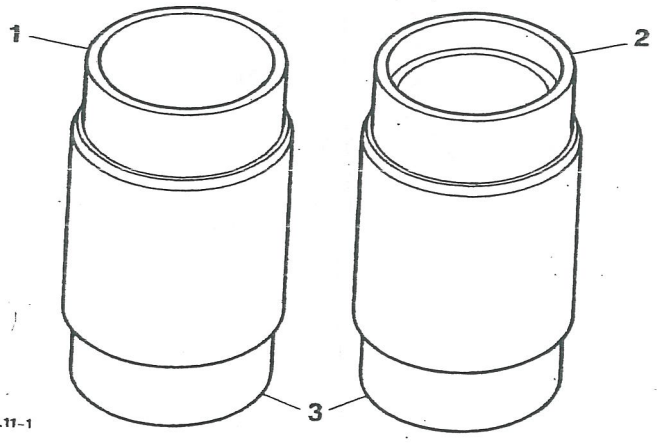

1. Plain end

2. Recessed end

3. Tool 3880080-T0301

1. Refit the upper bearing over the inner fork tube.
2. Locate the oil lock into the lower end of the fork outer tube.
3. With the outer fork tube secured in the vice by the caliper mounting, slide the inner tube into the outer tube.
4. Slide the upper bearing down the tube and drift into its location in the outer tube using the plain er of tool 3880080-T0301.

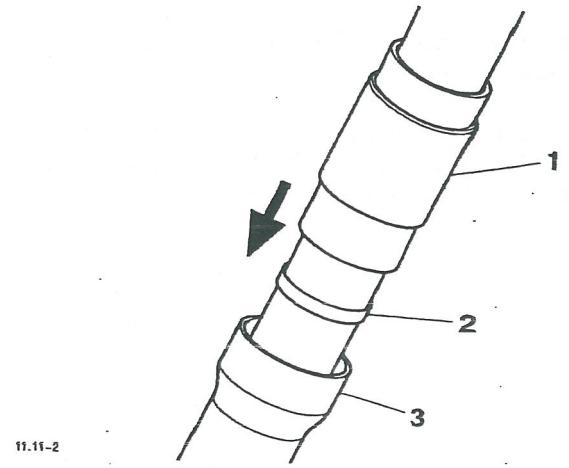

1. Tool 3880080-T0301

2. Bearing

3. Outer tube

5. Fit the oil seal washer.
6. Lubricate a new oil seal and position over the inne tube.
7. Drift it into position in the outer tube using the plair end of tool 3880080-T0301.
8. Secure the assembly with a new circlip.
9. Fit a new dust seal over the inner tube, drifting it into position in the outer tube using the recessed end of tool 3880080-T0301.

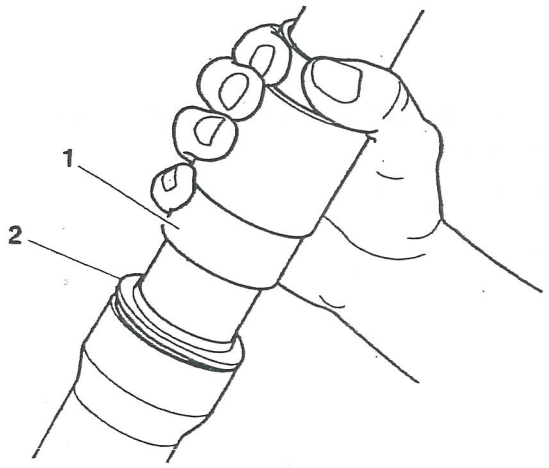

1. Tool 3880080-T0301

2. Dust seal

10. Refit the damper assembly to the inner tube.

11. Refit tool 3880090-T0301 to the damper rod and engage the square end in the damper.

12. Fit a new copper washer to the capscrew in the base of the fork outer tube.

13. Prevent the damper from turning by holding tool 3880090-T0301 and tighten the capscrew in the base of the outer tube to **43 Nm.**

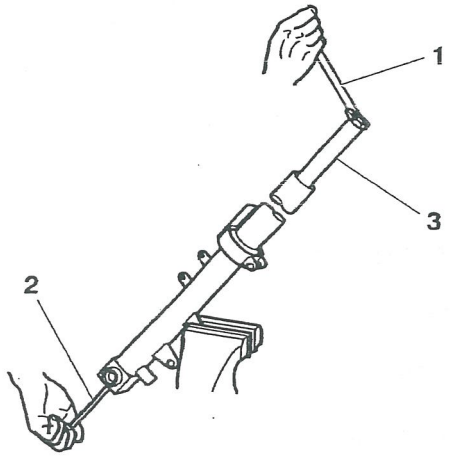

11.12-1

1. Spanner

2. Allen Key

3. Tool 3880090-T0301

14. Remove the special tool.

15. Refit the damper tube to the damper rod.

16. Fill the forks with oil as previously described in this section.

NOTE:

- **Work the fork several times to ensure oil enters the valves etc.**

17. Refit the fork spring.

18. Fit a new 'O' ring to the top cap.

19. Locate the threaded end of tool 3880085-T0301 to the damper rod and temporarily engage the thread. Raise the damper rod using the tool then hold the damper rod and remove the tool.

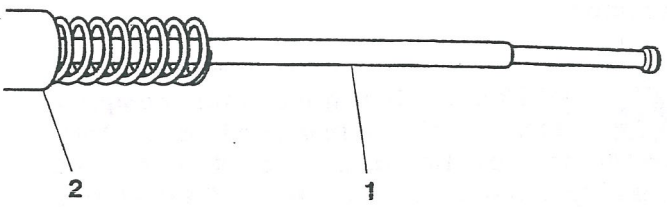

11.12-2

1. Tool 3880085-T0301

2. Damper rod (inside inner tube)

20. Refit the locknut to the damper rod and adjust the nut until 11mm of thread are visible above the nut.

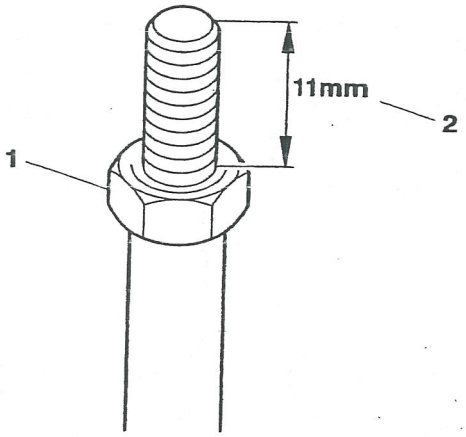

11.12-3

1. Locknut

2. 11 mm

21. Refit the slotted washer.

22. Ensuring the 11mm setting for the locknut does not change, locate the top cap to the damper rod and tighten the locknut to **15 Nm.**

23. Compress the spring and engage the threads of the top cap. Tighten by hand as far as possible.

NOTE:

- **Final tightening of the top cap can only be correctly achieved when the fork is installed in the yokes. Prior to installation in the yokes, attempts to tighten the cap will result in the inner tune and cap rotation, thus preventing the correct torque being achieved.**

24. Return the spring pre-load adjuster to the original setting.

25. Tighten the top cap to **25 Nm** after the fork has been securely refitted into the yokes.

HEADSTOCK BEARING CHECK / ADJUSTMENT

Check

1. Raise and support the front of the motorcycle.

WARNING: Before staring work, ensure the motorcycle is stabilised and adequately supported. This will help prevent it from falling and causing injury to the operator or damage to the motorcycle.

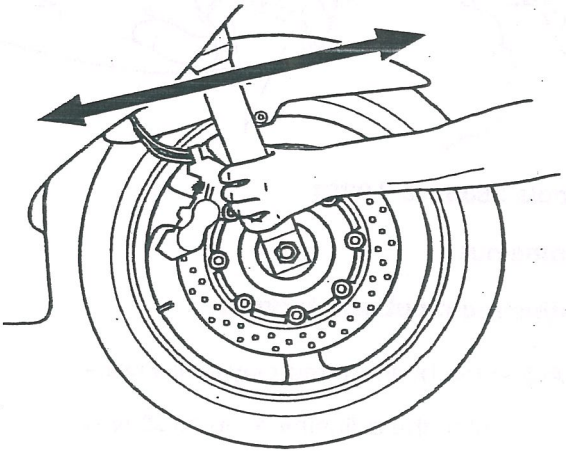

11.13-1

Checking headstock bearings

2. Hold the lower end of the front forks and try to move them forward and backward. If any free-play can be detected, the headstock bearings require adjustment.

Adjustment

1. Raise and support the front of the motorcycle.
2. Slacken the yoke pinch bolts **on the top yoke only.**

WARNING: If the lower yoke fixings are also slackened, the forks will no longer support the weight of the motorcycle.

Do not slacken the lower yoke fixings as, in this condition, the motorcycle could topple over causing damage and/or risk of injury.

3. Slacken the nut in the centre of the top yoke.

4. Slacken the headstock bearing locknut using tools 3880140-T0301

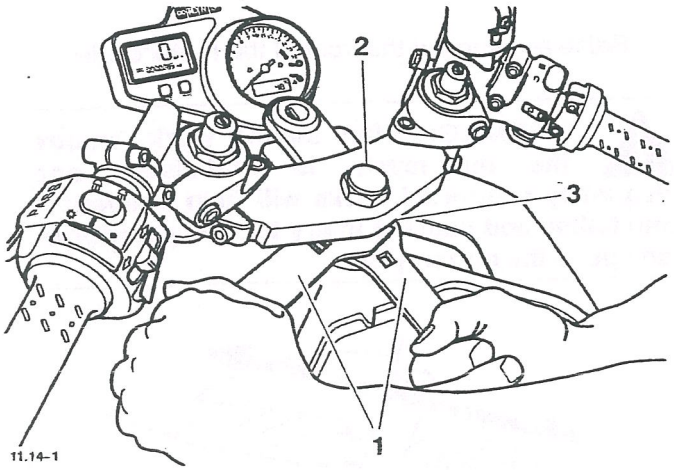

1. **Tools 3880140-T0301**
2. **Dome nut**
3. **Adjustment nut and locknut**

5. Adjust the bearing free-play as follows:-
   - Tighten the adjustment nut to **32 Nm.**
   - Loosen the nut and then retighten by hand until any bearing free play is eliminated.

WARNING: It is essential that the adjuster nut is not over-tightened. If the adjuster is over-tightened it will cause a pre-load on the headstock bearings. This will introduce tight steering which will lead to premature bearing wear and could cause loss of control and an accident.

NOTE:

- **Correct adjustment is attained when the bearing play is eliminated without preloading the bearings.**
- **Before tightening the headstock nut, or if the nut is ever removed for any other reason, apply a smear of 'Copperslip' grease to the nut threads in order to prevent the nut from binding.**

6. Hold the adjuster nut and tighten the locknut to **40 Nm** using tools 3880140-T0301.
7. Tighten the top yoke pinch bolts to **20 Nm.**
8. Check that the free play has been eliminated, and that the steering can be turned freely from lock to lock without any sign of tightness. Re-adjust if necessary.
9. Tighten the top yoke centre nut to **90 Nm.**

BRAKING SYSTEM

CONTENTS

	Page
Exploded Views	12.2
Braking System Maintenance Safety Precautions	12.6
Fluid Level Inspection	12.7
Changing Brake Fluid	12.7
Brake Pads	12.7
Brake Wear Inspection	12.7
Bleeding The Front Brakes, Renewing Brake Fluid	12.8
Front Brake Pads	12.9
Removal	12.9
Installation	12.10
Front Brake Caliper	12.10
Removal	12.10
Disassembly	12.11
Inspection	12.11
Assembly	12.11
Installation	12.12
Front Discs	12.12
Wear	12.12
Front Disc Thickness	12.12
Disc Run-out	12.12
Removal	12.13
Installation	12.13
Front Brake Master Cylinder	12.13
Removal	12.13
Disassembly	12.14
Inspection	12.14
Assembly	12.14
Installation	12.15
Bleeding The Rear Brakes, Renewing Brake Fluid	12.16
Rear Brake Pads	12.17
Removal	12.17
Installation	12.19
Rear Brake Caliper	12.20
Removal	12.20
Disassembly	12.20
Inspection	12.20
Assembly	12.20
Installation	12.21
Rear Brake Disc	12.21
Wear	12.21
Rear Disc Thickness	12.21
Disc Run-out	12.21
Rear Master Cylinder	12.22
Removal	12.22
Disassembly	12.22
Inspection	12.22
Assembly	12.23
Installation	12.23

Exploded View - Front Brake Master Cylinder

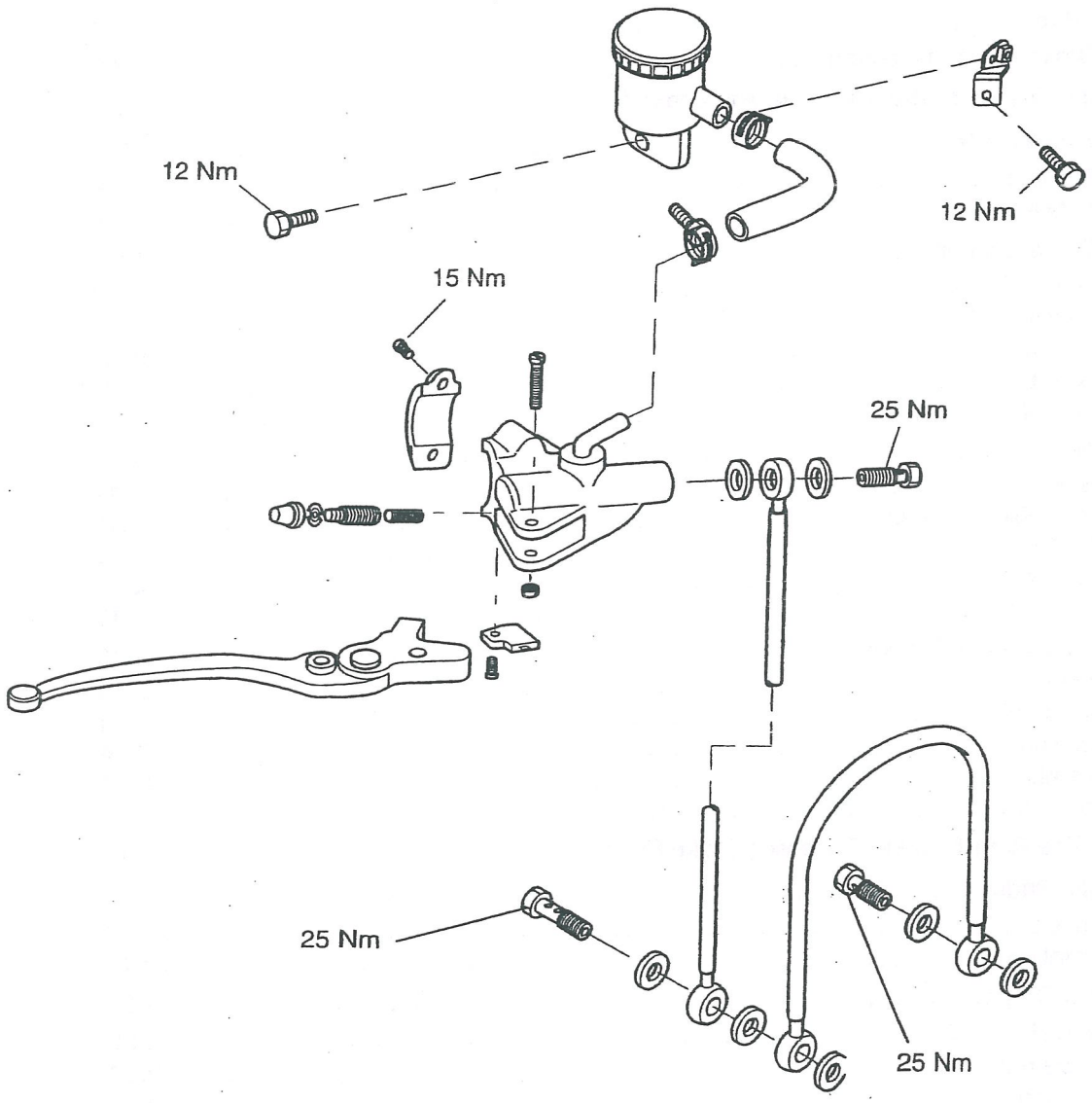

Exploded View - Front Brake Caliper

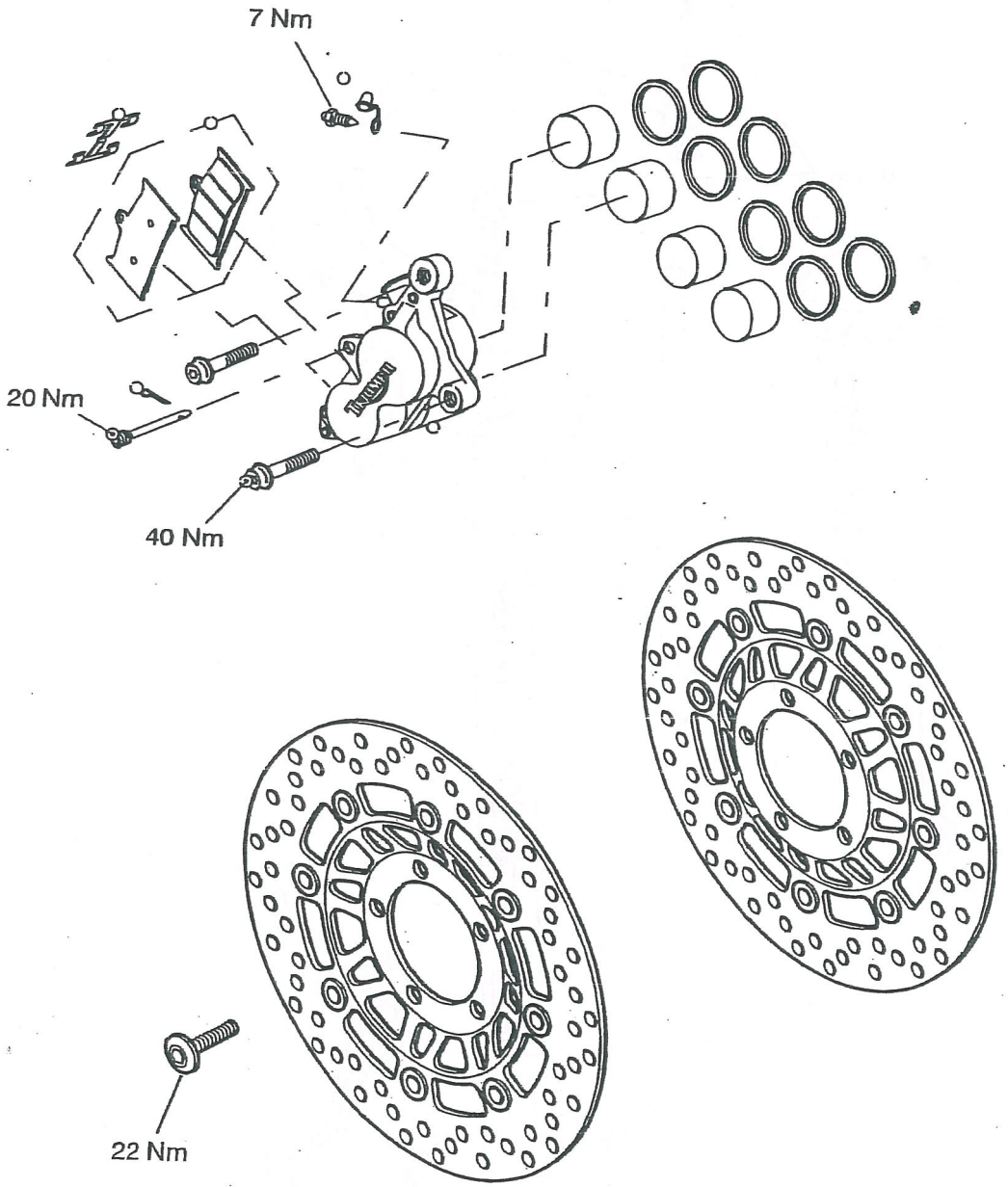

Exploded View - Rear Brake Master Cylinder

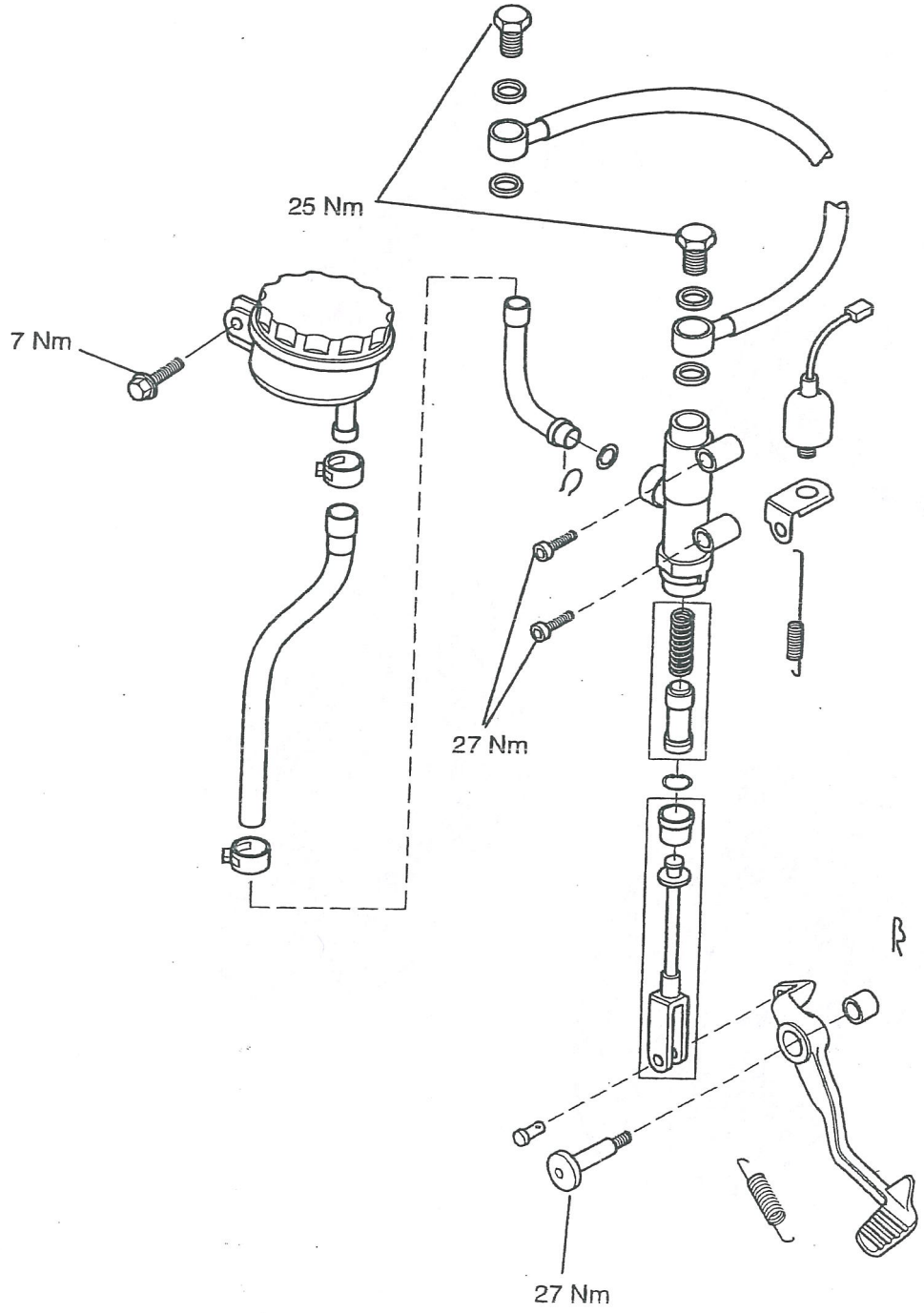

Exploded View - Rear Brake Caliper

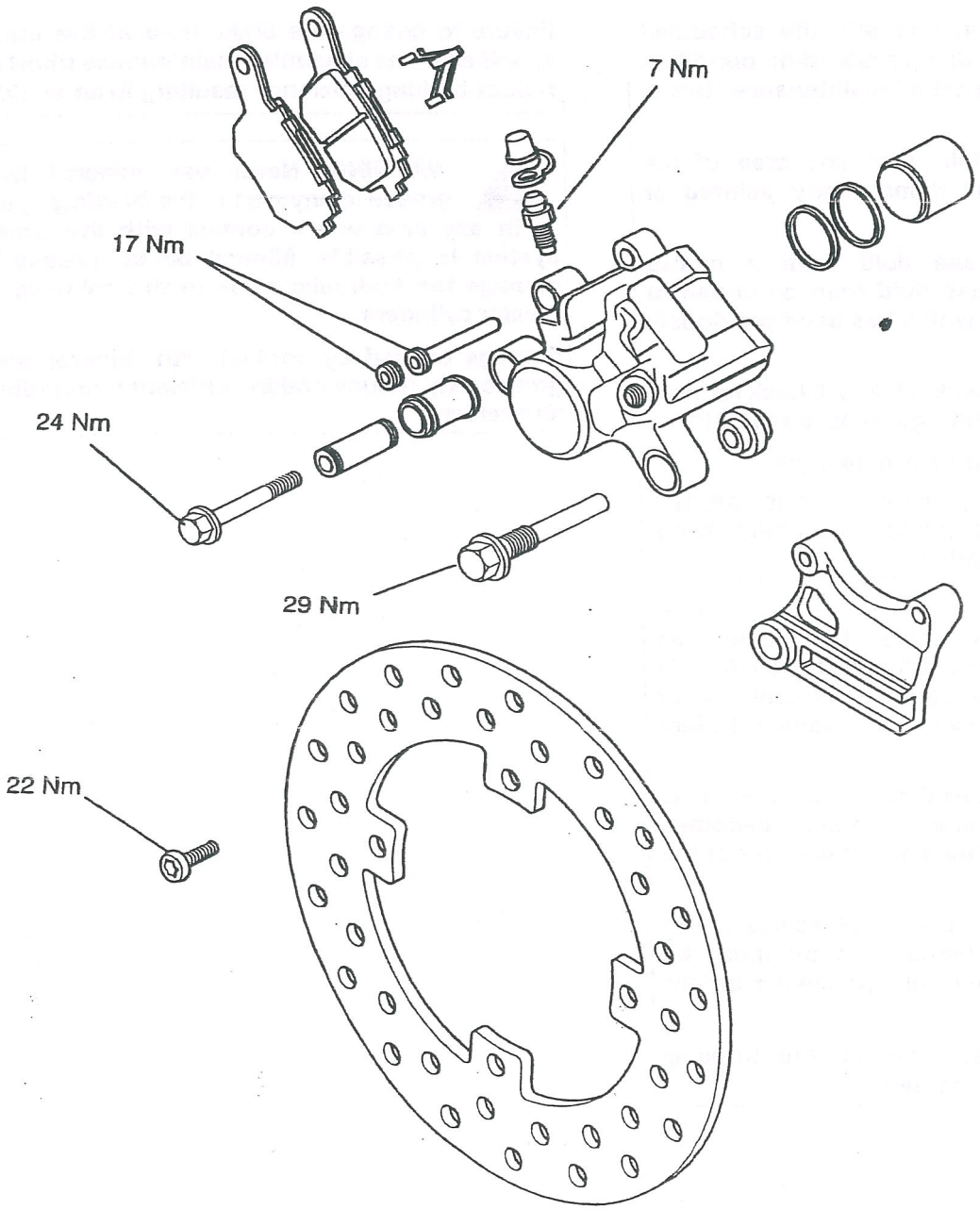

BRAKING SYSTEM MAINTENANCE SAFETY PRECAUTIONS

WARNING: Brake fluid is hygroscopic which means it will absorb moisture from the air. The absorbed moisture will greatly reduce the boiling point of the brake fluid causing a reduction in braking efficiency.

Replace brake fluid in line with the scheduled maintenance chart. A dangerous riding condition could result if this important maintenance item is neglected.

Do not spill brake fluid onto any area of the bodywork as this will damage any painted or plastic surface.

Always use new brake fluid from a sealed container and never use fluid from an unsealed container or from one which has been previously opened.

Do not mix different brands of fluid. Check for fluid leakage around brake fittings, seals and joints.

Check regularly for brake hose damage.

FAILURE TO OBSERVE ANY OF THE ABOVE WARNINGS MAY REDUCE BRAKING EFFICIENCY LEADING TO AN ACCIDENT.

WARNING: If there has been an appreciable drop in the level of the fluid in either brake fluid reservoir, consult your authorised Triumph Dealer for advice before riding.

If the brake lever or pedal feel soft when it is applied, or if the lever/pedal travel becomes excessive, there may be air in the brake lines or the brake may be defective.

It is dangerous to operate the motorcycle under such conditions and remedial action must be taken by your authorised Triumph Dealer before riding the motorcycle.

Failure to take remedial action may reduce braking efficiency leading to an accident.

WARNING: Use only D.O.T. 4 specification brake fluid as listed in the general information section of this manual. The use of brake fluids other than those D.O.T. 4 fluids listed in the general information section may reduce the efficiency of the braking system leading to an accident.

Failure to change the brake fluid at the interval specified in the scheduled maintenance chart may reduce braking efficiency resulting in an accident.

WARNING: Never use mineral based grease in any part of the braking system or in any area where contact with the braking system is possible. Mineral based grease will damage the hydraulic seals in the calipers and master cylinders.

Damage caused by contact with mineral based grease may reduce braking efficiency resulting in an accident.

FLUID LEVEL INSPECTION

In accordance with the scheduled maintenance chart, inspect the brake fluid level in the front and rear master cylinder reservoirs.

1. Ensure that the brake fluid level in the front and rear brake fluid reservoirs is between the upper and lower level lines (reservoir held horizontal).

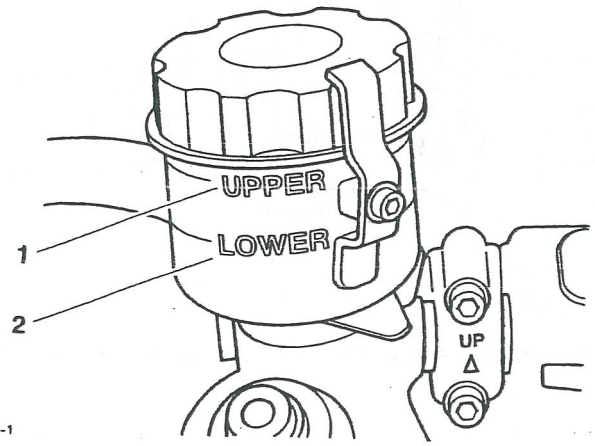

12.07-1

1. Front reservoir upper level
2. Front reservoir lower level

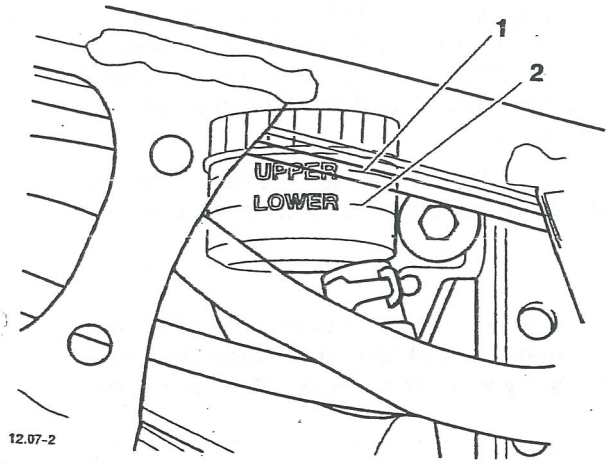

12.07-2

1. Rear reservoir upper level
2. Rear reservoir lower level

CHANGING BRAKE FLUID

Brake fluid should be changed at the interval specified i the scheduled maintenance chart.

BRAKE PADS

Front and rear pad wear is automatically compensate for and has no effect on brake lever or pedal action.

Brake Wear Inspection

In accordance with the scheduled maintenance chart inspect the brake pads for wear. The minimum thickness of lining material for any front or rear brake pad is 1.5mm

If any pad has worn to the bottom of the groove in the pad centre, replace all the brake pads on that wheel.

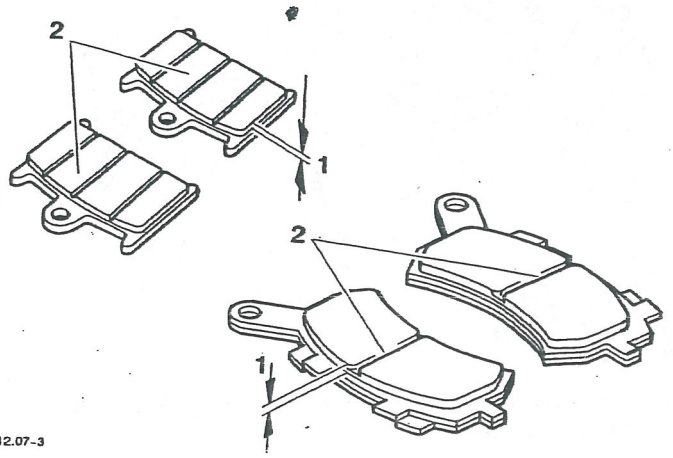

12.07-3

1. Lining material thickness
2. Centre groove

WARNING: Do not replace individual brake pads, instead always replace both pads in the brake caliper. On the front where two calipers are mounted on the same wheel, all the pads in both calipers must be replaced together. Replacing individual pads will reduce braking efficiency and may cause an accident.

BLEEDING THE FRONT BRAKES, RENEWING BRAKE FLUID

WARNING: Before starting work, ensure the motorcycle is stabilised and adequately supported. This will help prevent it from falling and causing injury to the operator or damage to the motorcycle.

1. Note the original setting of the brake lever adjuster in order that it can be returned to the same position when the bleeding operation is complete.
2. Set the brake lever adjuster to position No.1.

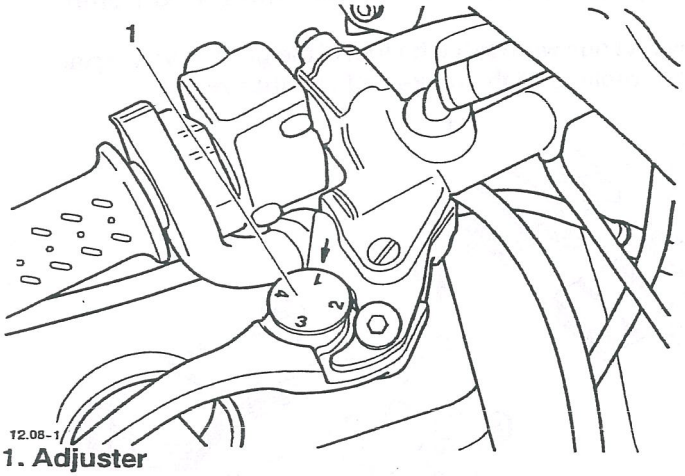

1. Adjuster

3. Remove the rubber cap from the bleed nipple on the right hand caliper.
4. Attach a transparent tube to the bleed nipple.

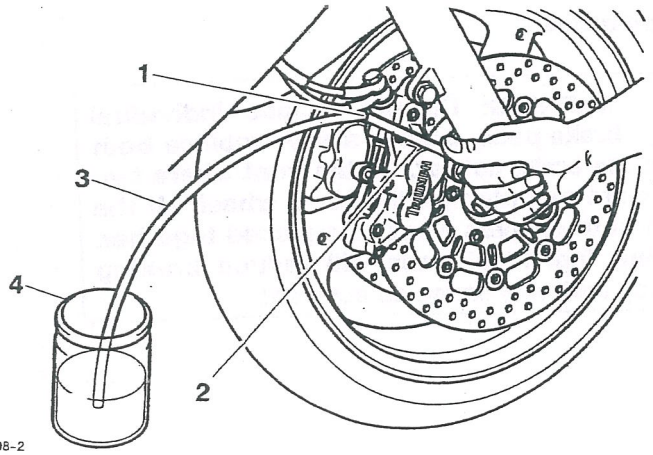

1. Bleed nipple
2. Spanner
3. Bleed tube
4. Container

5. Place the other end of the tube in a suitable receptacle containing new brake fluid, keeping the tube end below the level of fluid.
6. Turn the handlebars to bring the fluid reservoir to a level position.

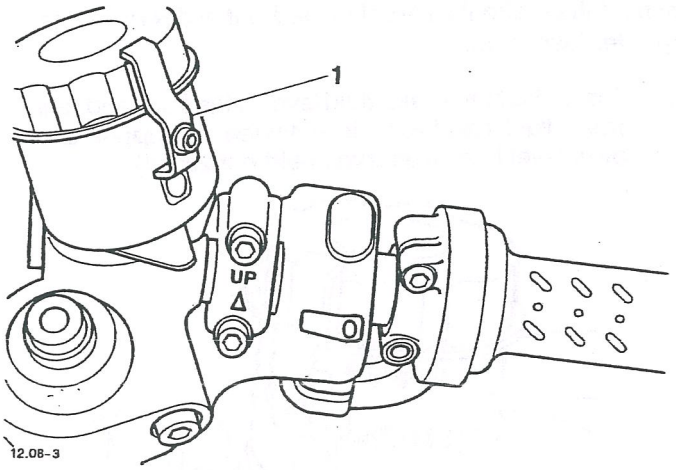

1. Safety clip

7. Remove the safety clip from the brake reservoir cover.

WARNING: Ensure absolute cleanliness when adding brake fluid to the brake fluid reservoir. Do not allow moisture or debris to enter the cylinder as this will adversely affect the fluid properties. Always use fluid from a sealed container and do not use fluid from a container which has been previously opened. Always check for fluid leakage around hydraulic fittings and for damage to hoses.

A dangerous riding condition leading to an accident could result if any element of this warning is ignored.

CAUTION: To prevent body/paint damage, do not spill brake fluid onto any area of the bodywork or other painted or plastic surface.

8. Carefully remove the reservoir cover taking care not to spill any fluid.
9. Check the condition of the sealing diaphragm inside the reservoir. Replace if necessary.
10. Release the bleed nipple.

WARNING: Use only D.O.T. 4 specification brake fluid as listed in the general information section of this manual. The use of brake fluids other than those D.O.T. 4 fluids listed in the general information section may reduce the efficiency of the braking system leading to an accident.

Observe the brake fluid handling warnings given earlier in this section of the manual.

NOTE:

- **During bleeding, do not allow the fluid level to fall below the lower level mark in the reservoir. If the level is allowed to fall below this mark, air may enter the system and the sequence of bleeding must be repeated.**

11. Slowly pull the brake lever to the handlebar and, holding the lever fully in, close the bleed nipple.

    Repeat steps 10 and 11 until no more air appears in the bleed tube.

12. Maintain the brake fluid level between the upper and lower reservoir levels whilst bleeding is being carried out.

13. When all air has been expelled from the system, hold the lever in and close the bleed nipple. Tighten the nipple to **7 Nm.**

14. Fill the reservoir to the upper level with new D.O.T. 4 fluid.

WARNING: Use only D.O.T. 4 specification brake fluid as listed in the general information section of this manual. The use of brake fluids other than those D.O.T. 4 fluids listed in the general information section may reduce the efficiency of the braking system leading to an accident.

Observe the brake fluid handling warnings given earlier in this section of the manual.

15. Remove the transparent bleed tube.

16. Replace the bleed nipple cap.

    Repeat the procedure for the left-hand caliper.

18. Refit the reservoir cover and diaphragm. Refit the safety clip and screw.

WARNING: Always return the lever adjuster to the original setting as noted in paragraph 1. Operating the motorcycle with lever settings which are unfamiliar may lead to loss of control or an accident.

19. Reset the brake lever adjuster to the original setting.

20. Check that the brake operates correctly.

FRONT BRAKE PADS

Removal

WARNING: Before starting work, ensure the motorcycle is stabilised and adequately supported. This will help prevent it from falling and causing injury to the operator or damage to the motorcycle.

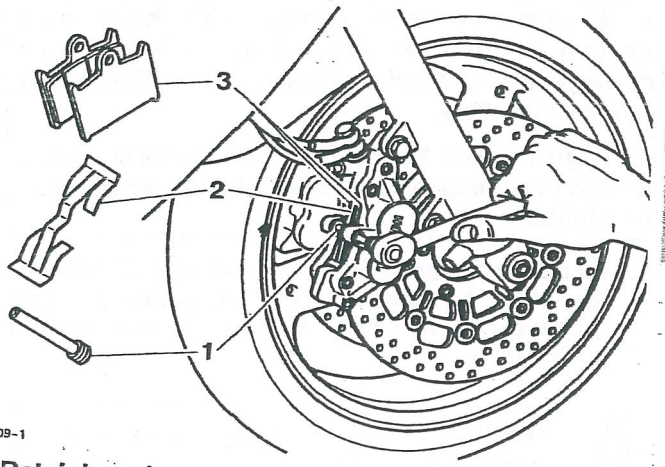

12.09-1

1. **Retaining pin**
2. **Anti-rattle spring**
3. **Brake pads**

1. Remove the split pin from the inner end of the pad retaining pin.

2. Release and remove the pad retaining pin.

3. Remove the anti-rattle spring and inspect the spring for damage, replace if necessary.

CAUTION: Never lever directly against the disc, caliper or the brake pad as this will damage these components. Always use a levering tool made from a soft material which will not cause damage to the load bearing surfaces.

Brake fluid will be displaced as the caliper pistons are compressed. To prevent body/paint damage, do not spill brake fluid onto any area of the bodywork or other painted or plastic surface.

4. Carefully push the brake pads apart to force the caliper pistons back and allow withdrawal of the pads.

5. Remove both brake pads and inspect for damage and wear beyond the service limit, replace if necessary.

NOTE:

- **Complete the assembly of the brake pads to one caliper (see assembly for details) before removing the pads from the other caliper.**

Installation

WARNING: Never use mineral based grease in any part of the braking system or in any area where contact with the braking system is possible. Mineral based grease will damage the hydraulic seals in the calipers and master cylinders.

Damage caused by contact with mineral based grease may reduce braking efficiency resulting in an accident.

1. Fit new brake pads as an axle set or, if all the pads are in a serviceable condition, clean the pad grooves before refitting all pads in their original positions.

WARNING: Do not apply more than a minimum coating of grease to the pad retaining pins. Excess grease may contaminate the brake pads, hydraulic seals and discs causing reduced braking efficiency and an accident.

2. Lubricate the pad retaining pins using a minimum amount of proprietary high temperature 'Copperslip' type grease.
3. Fit the anti-rattle spring over the pads and push down in the centre to allow the pad retaining pin to slide across the top of the spring.
4. Tighten the pad retaining pins to **20 Nm**, and secure with new split pins at the inner end.
5. Pump the brake lever to correctly position the caliper pistons.

WARNING: Use only D.O.T. 4 specification brake fluid as listed in the general information section of this manual. The use of brake fluids other than those D.O.T. 4 fluids listed in the general information section may reduce the efficiency of the braking system leading to an accident.

Observe the brake fluid handling warnings given earlier in this section of the manual.

6. Check the front brake fluid level and adjust as required with new D.O.T. 4 fluid.

FRONT BRAKE CALIPER

Removal

WARNING: Before starting work, ensure the motorcycle is stabilised and adequately supported. This will help prevent it from falling and causing injury to the operator or damage to the motorcycle.

CAUTION: To prevent body/paint damage, do not spill brake fluid onto any area of the bodywork or other painted or plastic surface.

1. Disconnect the brake hose at the caliper (two hoses on right hand caliper), and place the free end of the hose(s) in a suitable container to collect brake fluid.
2. If the caliper is to be overhauled, remove the split pin and slacken the pad retaining pin.

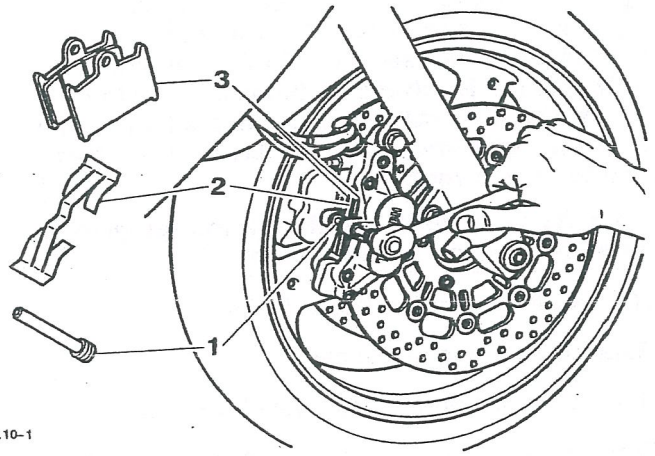

12.10-1

1. Retaining pin

2. Anti-rattle spring

3. Brake pads

CAUTION: Never lever directly against the disc, caliper or the pad lining material. Always use a levering tool made from a soft material which will not cause damage to the load bearing surfaces.

Brake fluid will be displaced from the hose joint as the caliper pistons are compressed. To prevent body damage, ensure that the displaced fluid does not come into contact with any part of the bodywork

3. Remove the two caliper securing bolts.
4. Manoeuvre the caliper clear of the disc, taking care not to damage the wheel.

Disassembly

WARNING: Do not attempt to split the two halves of the caliper. A dangerous riding condition leading to an accident could occur if this warning is ignored.

1. Remove the pad retaining pin and extract the pads.

WARNING: To prevent injury, never place fingers or hands inside the caliper opening when removing the pistons. Always wear eye, hand and face protection when using compressed air. Eye, face and skin damage will result from direct contact with compressed air.

2. Cover the caliper opening with a clean, heavy cloth and, using either compressed air or by reconnecting the master cylinder and pumping the brake lever, eject the pistons one at a time.

Inspection

1. Check the pistons and caliper bores for corrosion, scoring and damage. Renew as necessary.

WARNING: Always renew caliper seals and pistons after removal from the caliper. An effective hydraulic seal can only be made if new components are used.

A dangerous riding condition leading to an accident could result if this warning is ignored.

2. Inspect the brake pads for damage and wear beyond the service limit. Renew as necessary.

Assembly

WARNING: Never use mineral base grease in any part of the braking syster or in any area where contact with the brakin system is possible. Mineral based grease wi damage the hydraulic seals in the calipers an master cylinders.

A dangerous riding condition leading to a accident could result if this warning is ignored.

1. Fit new fluid seals.

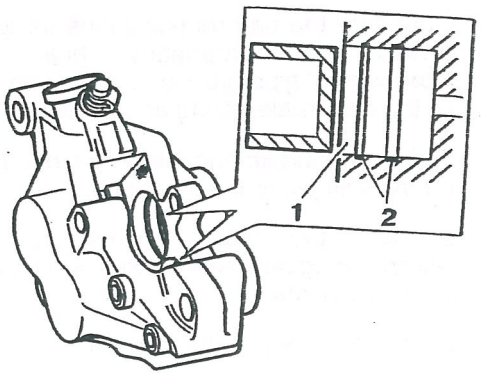

12.11-1

1. Caliper bore
2. Piston seals

WARNING: Ensure that the caliper bores do not become scratched during piston removal and assembly. Ensure that the pistons remain square to their bores during fitment otherwise damage to the caliper could result.

A dangerous riding condition leading to an accident could result if this warning is ignored.

2. Apply brake fluid to the outside of the caliper pistons and fluid seals, then carefully push the pistons fully into the caliper bores by hand.

Installation

1. Position the caliper over the disc and tighten the caliper bolts to **40 Nm.**
2. Fit the brake pads to the caliper and locate the anti-rattle spring over the pads.

WARNING: Do not apply more than a minimum coating of grease to the pad retaining pins. Excess grease may contaminate the brake pads, hydraulic seals and discs causing reduced braking efficiency and an accident.

3. Lubricate the pad retaining pins using a minimum amount of proprietary high temperature 'Copperslip' type grease. Push down in the centre of the anti-rattle spring and fit the retaining pin.
4. Tighten the brake pad retaining pin to **20 Nm** and fit a new split pin to the inner end.
5. Connect the brake hose(s) to the caliper incorporating new sealing washers on each side of the banjo bolt(s).
6. Tighten the banjo bolts to **25 Nm.**

WARNING: Use only D.O.T. 4 specification brake fluid as listed in the general information section of this manual. The use of brake fluids other than those D.O.T. 4 fluids listed in the general information section may reduce the efficiency of the braking system leading to an accident.

Observe the brake fluid handling warnings given earlier in this section of the manual.

7. Fill the master cylinder with new, D.O.T. 4 brake fluid from a sealed container.
8. Bleed the front brakes as described earlier in this section.

FRONT DISCS

Wear

WARNING: Before starting work, ensure the motorcycle is stabilised and adequately supported. This will help prevent it from falling and causing injury to the operator or damage to the motorcycle.

1. Replace any brake disc if worn beyond the service limit or if it exceeds the disc run-out limit.

Front disc thickness

Standard	**4.0 mm**
Service Limit	**3.5 mm**

Disc run-out

Service Limit	**0.10 mm**

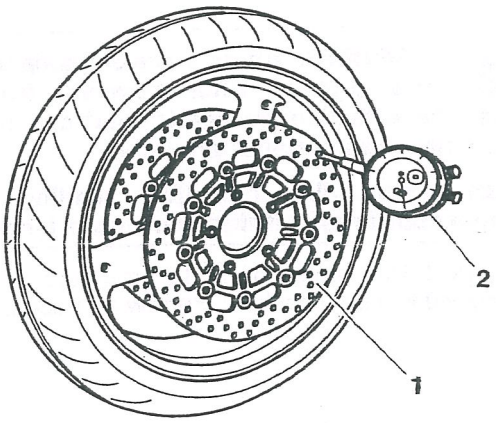

12.12-1

1. Disc
2. Dial gauge

Removal

WARNING: Do not renew front brake discs individually. Discs must always be renewed in pairs even if one of a pair is serviceable.

A dangerous riding condition leading to an accident could result if this warning is ignored.

1. Remove the front wheel as described in the wheel section.

WARNING: Damage to the wheel centre could cause misalignment of the wheel when refitted. A dangerous riding condition leading to an accident could result if this warning is ignored.

2. Support the wheel on blocks as illustrated to avoid damage to the wheel centre and brake disc.

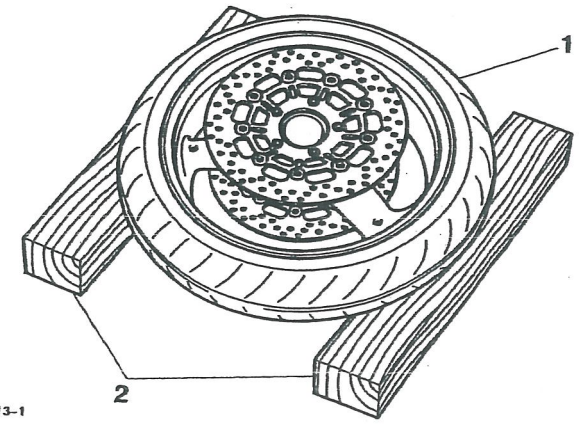

12.13-1

1. **Wheel**
2. **Support block**

3. Remove and discard the disc bolts and detach the disc.
4. Repeat operations 2 and 3 to remove the disc on the opposite side.

Installation

1. Locate the first disc to the wheel (offset outwards).
2. Fit new securing bolts and tighten to **22 Nm.**
3. Repeat steps 1 & 2 for the other disc.
4. Thoroughly clean and degrease both discs.
5. Refit the wheel as described in the wheel section.

FRONT BRAKE MASTER CYLINDER

WARNING: Before starting work, ensure the motorcycle is stabilised and adequately supported. This will help prevent it from falling and causing injury to the operator or damage to the motorcycle.

Removal

1. Remove the seat and disconnect the battery, negative (black) lead first.

CAUTION: To prevent body/paint damage, do not spill brake fluid onto any area of the bodywork or other painted or plastic surface.

2. To drain the fluid from the master cylinder, attach a tube to the right hand caliper bleed nipple, slacken the nipple and allow the fluid to drain into a suitable container. Operate the brake lever until all fluid has been expelled.
3. Note the setting of the brake lever adjuster to ensure it is returned to the same position when the overhaul operation is complete.
4. Remove the pivot locknut and bolt securing the brake lever to the master cylinder. Remove the lever.

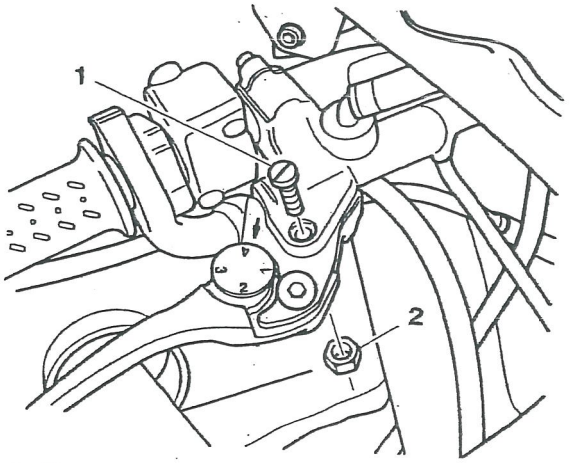

12.13-2

1. **Pivot bolt**
2. **Locknut**

5. Disconnect from the master cylinder the;
   - brake hose,
   - brake light switch connections,
   - reservoir hose.
6. Release the clamp screws from the handlebar and collect the master cylinder.

Installation

1. Locate the master cylinder to the handlebars and position the clamp with the 'UP' arrow pointing upwards. Align the master cylinder to clamp split line with the dot mark on the handlebar.

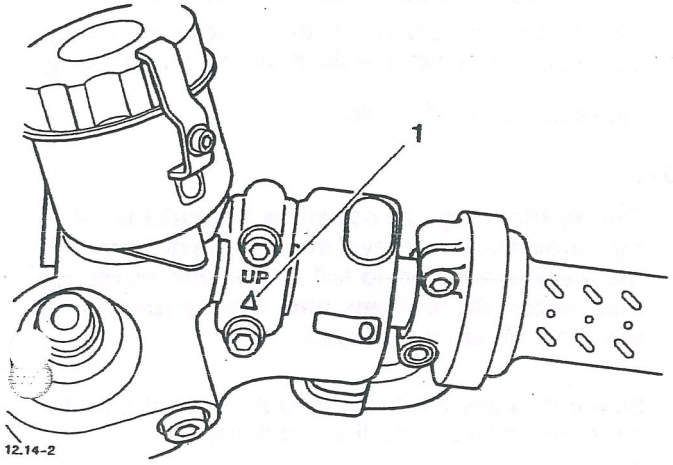

1. 'Up' arrow mark

2. Tighten the clamp bolts, upper first and then the lower to **15 Nm.**
3. Connect the brake light switch.
4. Position the brake lever ensuring that pivot boss is correctly aligned to the push rod. Fit and tighten the pivot bolt to **6 Nm**, and the locknut to **1 Nm.**
5. Connect the brake hose to the master cylinder incorporating new sealing washers. Tighten the banjo bolt to **25 Nm.**

WARNING: To prevent brake fluid leaks from the reservoir hose, ensure the reservoir hose clip is correctly positioned over the joint with the master cylinder.

An incorrectly positioned hose clip could cause a brake fluid leak and impaired brake performance, resulting in loss of motorcycle control and an accident.

6. Reconnect the reservoir hose.

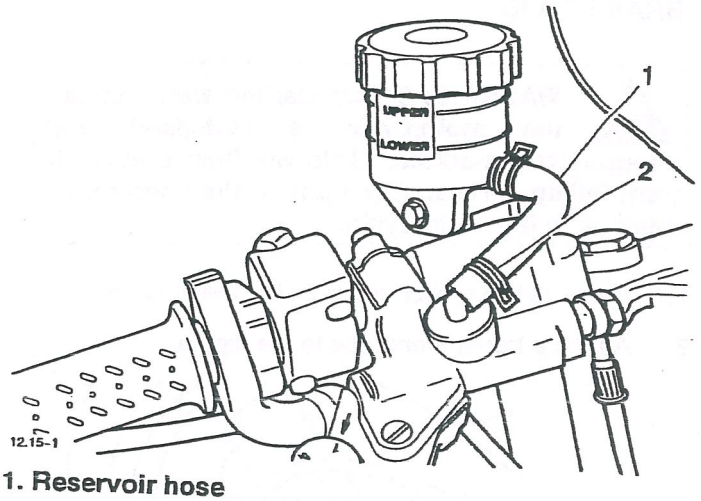

1. Reservoir hose

2. Clip (correctly positioned)

7. Fill the master cylinder reservoir with new DOT4 brake fluid.

WARNING: Use only D.O.T. 4 specification brake fluid as listed in the general information section of this manual. The use of brake fluids other than those D.O.T. 4 fluids listed in the general information section may reduce the efficiency of the braking system leading to an accident.

Observe the brake fluid handling warnings given earlier in this section of the manual.

8. Bleed the front brakes as described earlier in this section.

WARNING: Always return the lever adjuster to the original setting noted during removal. Operating the motorcycle with lever settings which are unfamiliar may lead to loss of control or an accident.

9. Return the brake lever adjuster to the setting previously noted.
10. Examine the system for correct operation and fluid leaks. Rectify as necessary.
11. Connect the battery positive, (red) lead first.
12. Refit the seat.

BLEEDING THE REAR BRAKES, RENEWING BRAKE FLUID

WARNING: Before starting work, ensure the motorcycle is stabilised and adequately supported. This will help prevent it from falling and causing injury to the operator or damage to the motorcycle.

1. Remove the rubber cap from the bleed nipple.
2. Attach a transparent tube to the nipple.

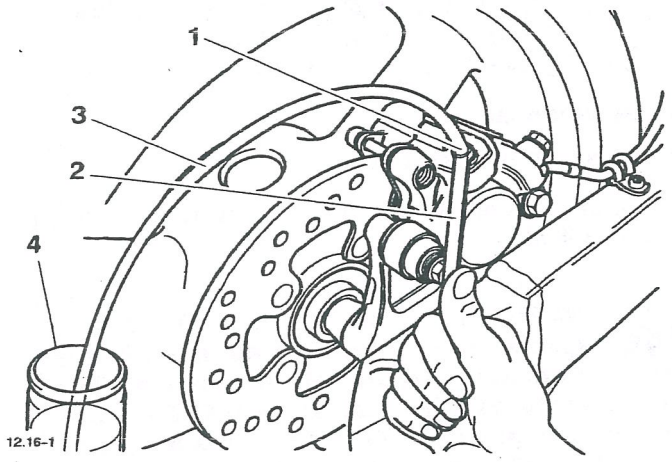

1. Bleed nipple
2. Spanner
3. Bleed tube
4. Fluid jar

3. Place the other end of the tube in a suitable receptacle containing new brake fluid, keeping the tube end below the level of fluid.
4. Remove the seat.
5. Unscrew and remove the rear brake reservoir cover taking care not to spill any fluid.

WARNING: Ensure absolute cleanliness when adding brake fluid to the brake fluid reservoir. Do not allow moisture or debris to enter the cylinder as this will adversely affect the fluid properties. Always use fluid from a sealed container and do not use fluid from a container which has been opened for any period of time. Always check for fluid leakage around hydraulic fittings and for damage to hoses.

A dangerous riding condition leading to an accident could result if this warning is ignored.

CAUTION: To prevent body/paint damage, do not spill brake fluid onto any area of the bodywork or other painted or plastic surface.

6. Check the condition of the reservoir sealing diaphragm. Replace the diaphragm as necessary.
7. Release the bleed nipple.

NOTE:

- **During bleeding, do not allow the fluid level to fall below the lower level mark in the reservoir. If the level is allowed to fall below this mark, air may enter the system and the sequence of bleeding must be repeated.**

8. Slowly depress the brake pedal and, holding the pedal fully down, close the bleed nipple.
9. Repeat steps 7 and 8 until no more air appears in the bleed tube.
10. Maintain the brake fluid level between the upper and lower reservoir levels whilst bleeding is being carried out.

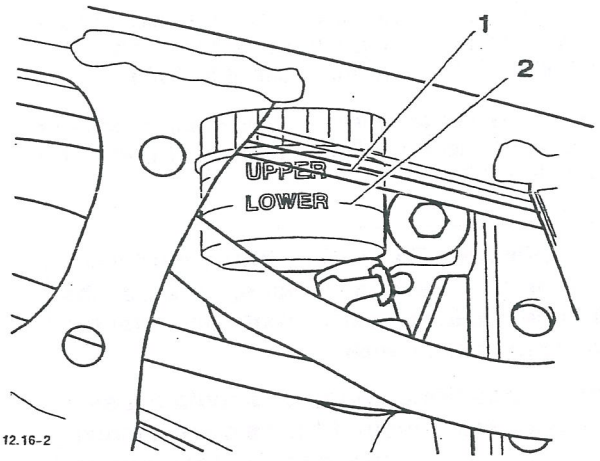

1. Rear reservoir upper level
2. Rear reservoir lower level

11. When all air has been expelled from the system, hold down the brake pedal and close the bleed nipple. Tighten the nipple to **7 Nm.**

12. Fill the reservoir to the maximum level with new D.O.T. 4 fluid.

WARNING: Use only D.O.T. 4 specification brake fluid as listed in the general information section of this manual. The use of brake fluids other than those D.O.T. 4 fluids listed in the general information section may reduce the efficiency of the braking system leading to an accident.

Observe the brake fluid handling warnings given earlier in this section of the manual.

13. Fit the reservoir cover and diaphragm. Check for correct diaphragm fitment before final tightening of the cover.

Remove the bleed tube from the nipple.

15. Replace the dust cap.

16. Check that the brake operates correctly.

REAR BRAKE PADS

Removal

WARNING: Before starting work, ensure the motorcycle is stabilised and adequately supported. This will help prevent it from falling and causing injury to the operator or damage to the motorcycle.

1. Remove the seat to give access to the rear brake fluid reservoir.

2. Remove the rearmost brake hose clip from the swinging arm.

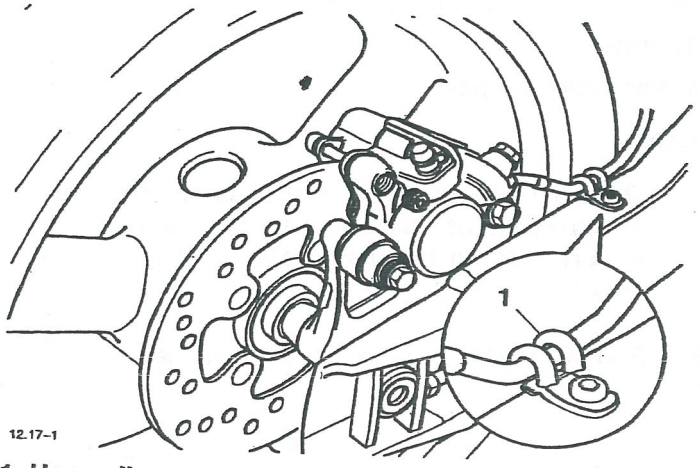

1. Hose clip

CAUTION: Operation 3 (below) will cause the level of fluid in the reservoir to rise above normal levels leading to seepage from the cap area. To prevent body/paint damage, do not spill brake fluid onto any area of the bodywork or other painted or plastic surface.

3. Push the brake caliper inwards towards the wheel in order to displace the caliper piston.

4. Remove the plug protecting the pad retaining pin.

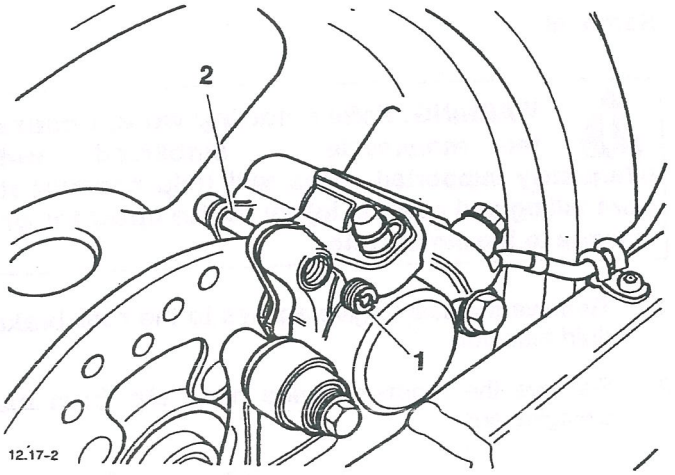

1. Plug

2. Pad retaining pin

NOTE:

- **Before removing the brake pads, note the relationship of the pads to the caliper and ensure that, on assembly, they are fitted in the same way.**

5. Remove the brake caliper bolts, raise the caliper.

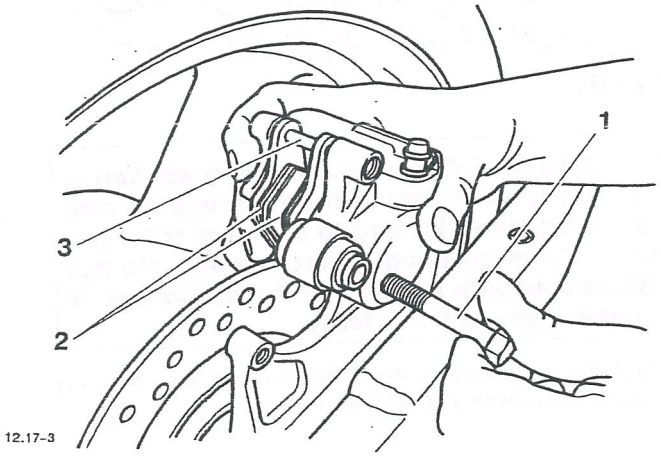

1. Brake caliper bolt

2. Brake pads

3. Pad retaining pin

6. Remove the pad retaining pin and detach the pads.

WARNING: Do not allow the caliper to hang on the brake hoses as this may damage the hoses and could lead to an accident.

7. Remove the anti-rattle spring and inspect for damage, replace if necessary.

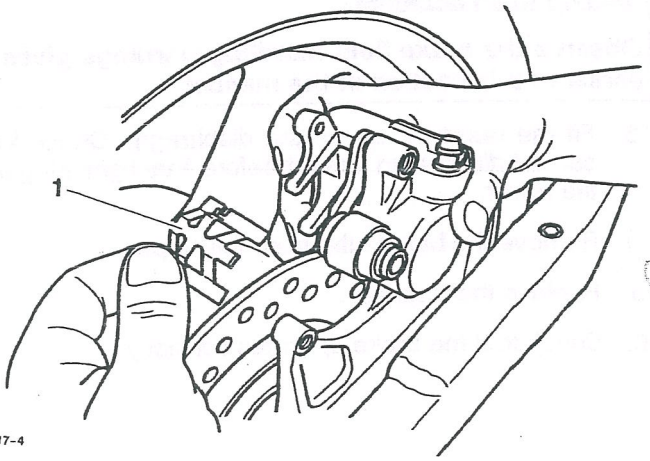

1. Anti-rattle spring

Installation

WARNING: Never use mineral based grease in any part of the braking system or in any area where contact with the braking system is possible. Mineral based grease will damage the hydraulic seals in the calipers and master cylinders.

Damage caused by mineral based grease may reduce braking efficiency resulting in an accident.

CAUTION: Brake fluid will be displaced as the caliper pistons are compressed. To prevent body damage, ensure that the displaced fluid does not come into contact with any part of the bodywork or the rear wheel.

1. Fit the anti-rattle spring into the caliper.
2. Renew the brake pads as a pair or, if both pads are in a serviceable condition, clean the pad grooves before fitting them.

WARNING: Do not apply more than a minimum coating of grease to the pad retaining pins. Excess grease may contaminate the brake pads, hydraulic seals and discs causing reduced braking efficiency and an accident.

3. Fit the brake pads to the caliper in the positions noted during removal.
4. Lubricate the pad retaining pin using a minimum amount of proprietary high temperature 'Copperslip' type grease.
5. Lower the caliper over the brake disc ensuring that the pads remain in the correct positions.
6. Install the pad retaining pin.

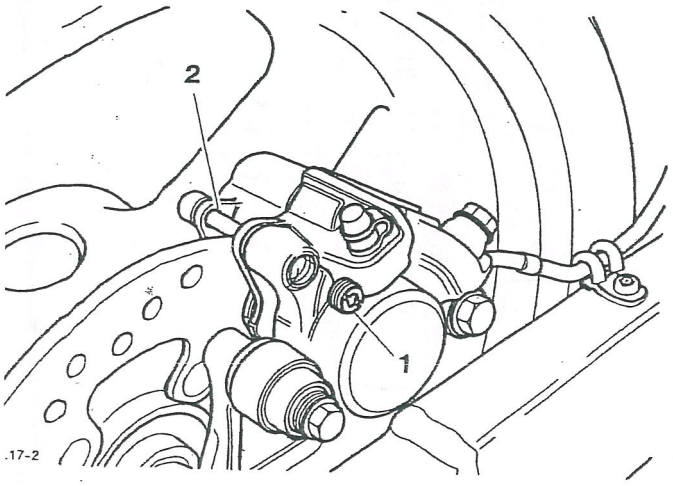

g
Pad retaining pin

7. Fit the caliper bolts and tighten to **24 Nm** (M8 bolt) and **29 Nm** (M12 bolt).
8. Tighten the pad retaining pin to **17 Nm.**
9. Fit the protector plug and tighten to **17 Nm.**
10. Pump the brake pedal to correctly position the caliper pistons.
11. Check the brake fluid level in the rear reservoir and top-up as required with new D.O.T. 4 fluid.

WARNING: Use only D.O.T. 4 specification brake fluid as listed in the general information section of this manual. The use of brake fluids other than those D.O.T. 4 fluids listed in the general information section may reduce the efficiency of the braking system leading to an accident.

Observe the brake fluid handling warnings given earlier in this section of the manual.

12. Refit the brake hose clip to the swinging arm and tighten to **9 Nm.**

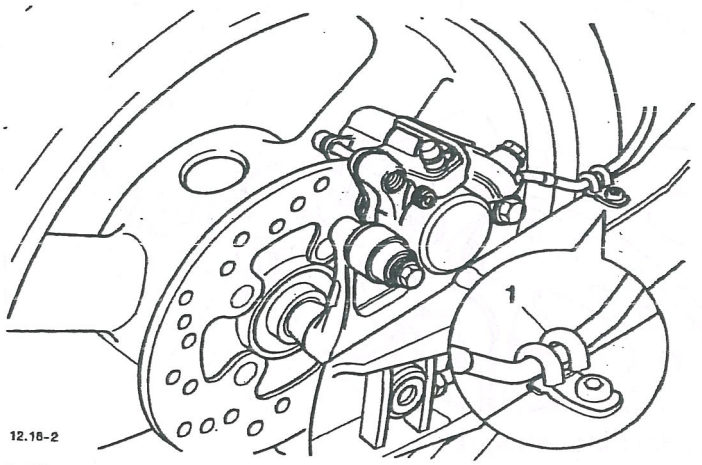

1. Hose clip

13. Refit the seat.

REAR BRAKE CALIPER

Removal

WARNING: Before starting work, ensure the motorcycle is stabilised and adequately supported. This will help prevent it from falling and causing injury to the operator or damage to the motorcycle.

CAUTION: To prevent body/paint damage, do not spill brake fluid onto any area of the bodywork or other painted or plastic surface.

1. Disconnect the rear brake hose at the caliper and place the free end of the hose in a suitable container to collect brake fluid.
2. Remove the caliper mounting bolts.
3. Remove the brake caliper assembly.

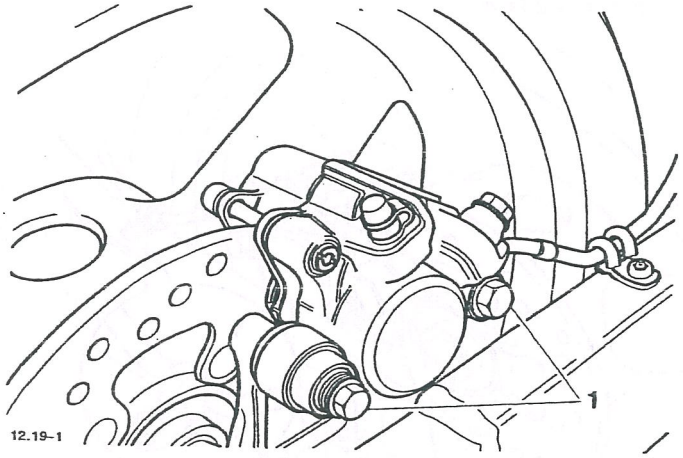

1. Caliper Mounting Bolts

Disassembly

1. Remove the plug protecting the pad retaining pin.
2. Remove the pad retaining pin.
3. Remove the brake pads and anti-rattle spring.

WARNING: To prevent injury, never place fingers or hands inside the caliper opening when removing the pistons. Always wear eye, hand and face protection when using compressed air. Eye, face and skin damage will result from direct contact with compressed air.

4. Cover the caliper opening with a clean, heavy cloth and, using either compressed air or by reconnecting the master cylinder and pumping the brake pedal, remove the piston.

Inspection

1. Check the piston and caliper bore for corrosion, scoring and damage. Renew as necessary.

WARNING: Always renew caliper seals and pistons after removal from the caliper. An effective hydraulic seal can only be made if new components are used.

A dangerous riding condition leading to an accident could result if this warning is ignored.

2. Inspect the brake pads for damage and wear beyond the service limit. Renew as necessary.

Assembly

WARNING: Never use mineral based grease in any part of the braking system or in any area where contact with the braking system is possible. Mineral based grease will damage the hydraulic seals in the calipers and master cylinders.

A dangerous riding condition leading to an accident could result if this warning is ignored.

WARNING: Ensure that the caliper bores do not become scratched during piston removal and assembly. Ensure that the pistons remain square to their bores during fitment otherwise damage to the caliper could result.

A dangerous riding condition leading to an accident could result if this warning is ignored.

1. Fit new fluid seals to the caliper. Apply brake fluid to the outside of the caliper piston and fluid seal.

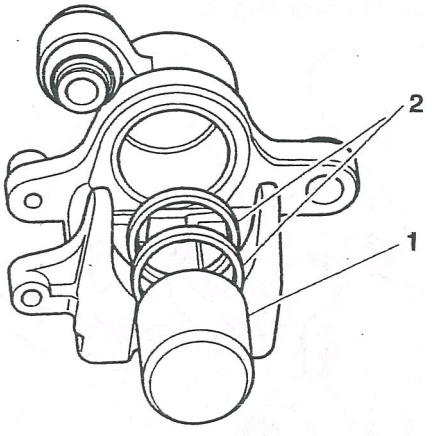

1. Piston

2. Seals

2. Carefully push the piston into the caliper by hand.
3. Install the anti-rattle spring into the caliper.

WARNING: Do not apply more than a minimum coating of grease to the pad retaining pins. Excess grease may contaminate the brake pads, hydraulic seals and discs causing reduced braking efficiency and an accident.

4. Position the brake pads in the caliper.
5. Lubricate both the pad retaining pin and plug with a minimum amount of proprietary high temperature 'Copperslip' type grease.
8. Fit the pad retaining pin and plug and tighten both to **17 Nm.**

Installation

1. Position the caliper to the motorcycle ensuring the pads are correctly aligned on both sides of the disc.
2. Fit the caliper retaining bolts and tighten to **24 Nm** (M8 bolt) and **29 Nm** (M12 bolt).
3. Connect the brake hose to the caliper incorporating new washers on each side of the banjo bolt.
4. Tighten the banjo bolt to **25 Nm.**

WARNING: Use only D.O.T. 4 specification brake fluid as listed in the general information section of this manual. The use of brake fluids other than those D.O.T. 4 fluids listed in the general information section may reduce the efficiency of the braking system leading to an accident.

Observe the brake fluid handling warnings given [illegible] r in this section of the manual.

Fill the master cylinder with new D.O.T. 4 brake fluid from a sealed container.

Bleed the rear brake as described earlier in this section.

REAR BRAKE DISC

Wear

WARNING: Before starting work, ensure the motorcycle is stabilised and adequately supported. This will help prevent it from falling and causing injury to the operator or damage to the motorcycle.

1. Replace any brake disc if worn beyond the service limit or exceeds the disc run-out limit.

Rear Disc Thickness

Standard	**5.0 mm**
Service Limit	**4.5 mm**

Disc Run-out

Service Limit	**0.15 mm**

Measure disc run out using an accurate dial gauge mounted on a surface plate.

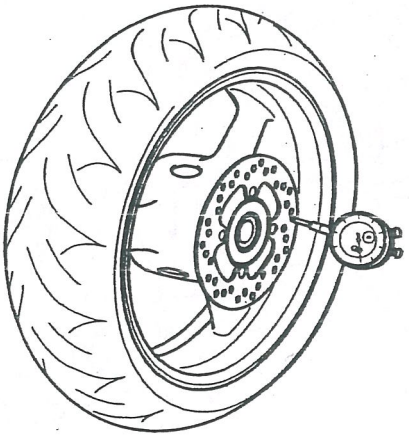

12.20-1

1. Disc
2. Dial Gauge

NOTE:

- **Details of rear brake disc removal and installation can be found in the wheel section.**

REAR MASTER CYLINDER

Removal

WARNING: Before starting work, ensure the motorcycle is stabilised and adequately supported. This will help prevent it from falling and causing injury to the operator or damage to the motorcycle.

1. Remove the seat and disconnect the battery negative (black) lead first.

CAUTION: To prevent body/paint damage, do not spill brake fluid onto any area of the bodywork or other painted or plastic surface.

2. Drain the brake fluid from the master cylinder by bleeding the system at the rear caliper until all fluid has been expelled.
3. Remove the clip and washer from the clevis pin at the lower end of the brake push-rod and remove the clevis pin.

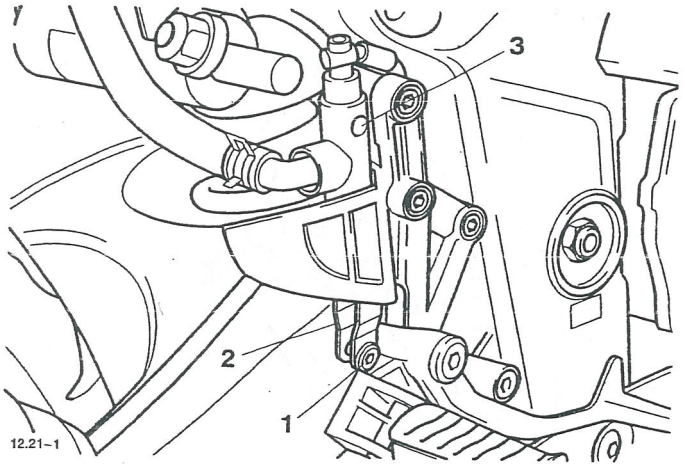

1. Clevis pin

2. Push-rod

3. Master cylinder

4. Disconnect from the master cylinder;
   - the rear brake hose (noting orientation),
   - the fluid reservoir hose.

NOTE:

- **During removal of the master cylinder, note the position of the brake light switch bracket.**

5. Remove the screws securing the master cylinder to the control plate and collect the master cylinder.

Disassembly

1. Detach the boot from the master cylinder and pushrod.
2. Remove the circlip retaining the pushrod to the cylinder.
3. Remove the pushrod and piston set from the master cylinder bore noting the relative position of the seals and piston components.

Inspection

1. Visually inspect the master cylinder bore for wear, scratches or corrosion. Replace as necessary.
2. Check the piston and cylinder bore for damage, wear or deterioration. Replace as necessary.

WARNING: Always renew the master cylinder piston seals once removed from the cylinder bore. An effective hydraulic seal can only be made if new components are used.

Using old seals and pistons could cause a brake fluid leak and impaired brake performance, resulting in loss of motorcycle control and an accident.

3. Examine the pushrod for bends and damage. Replace as necessary.

Assembly

WARNING: Never use mineral based grease in any part of the braking system or in any area where contact with the braking system is possible. Mineral based grease will damage the hydraulic seals in the calipers and master cylinders.

A dangerous riding condition leading to an accident could result if this warning is ignored.

1. Clean the master cylinder bore, piston and seals, with new brake fluid.
2. Ensure all ports are clear of obstruction.

WARNING: Ensure that the piston and piston seal are fitted facing the same way as noted during removal. A dangerous riding condition leading to an accident could result from incorrect assembly of the master cylinder.

3. Install the spring and piston set together.
4. Apply a small amount of brake grease to the pushrod.
5. Install the pushrod in the master cylinder and retain with a new circlip. Refit the boot.

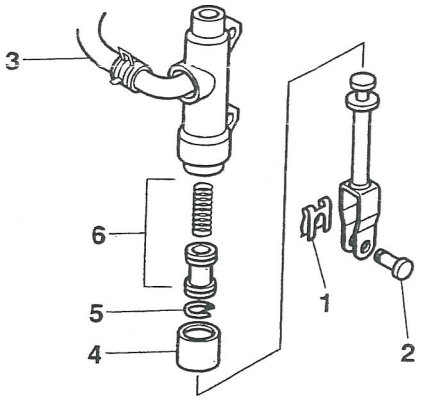

12.22-1

. Clip
. Clevis pin
. Reservoir hose
. Dust boot
. Circlip
Piston set

Installation

1. Fit the reservoir hose to the master cylinder.
2. Secure the master cylinder to the control plate. Tighten the securing screws to **27 Nm.**

NOTE:

- **The bracket for the brake light switch fits between the master cylinder and control plate on the lower master cylinder mounting bolt.**

3. Connect the push rod to the brake pedal using a new clevis pin and split pin.
4. Fit the brake hose to the master cylinder. Fit new washers on both sides of the hose union.
5. Ensuring correct orientation of the brake hose, tighten the banjo bolt to **25 Nm.**

WARNING: Use only D.O.T. 4 specification brake fluid as listed in the general information section of this manual. The use of brake fluids other than those D.O.T. 4 fluids listed in the general information section may reduce the efficiency of the braking system leading to an accident.

Observe the brake fluid handling warnings given earlier in this section of the manual.

CAUTION: To prevent body/paint damage, do not spill brake fluid onto any area of the bodywork or other painted or plastic surface.

6. Fill and bleed the rear brake system as described earlier.
7. Reconnect the battery, positive (red) lead first.
8. Fit the seat.

WHEELS

CONTENTS

	Page
Exploded View - Front Wheel	13.2
Exploded View - Rear Wheel and Final Drive	13.3
Tyres	13.4
Tyre Pressures	13.4
Tyre Wear/Wheel Inspection	13.5
Minimum Recommended Tread Depth	13.5
Important Tyre Information	13.6
Front Wheel	13.7
Removal	13.7
Installation	13.8
Rear Wheel	13.9
Removal	13.9
Installation	13.9

Exploded view - Front Wheel

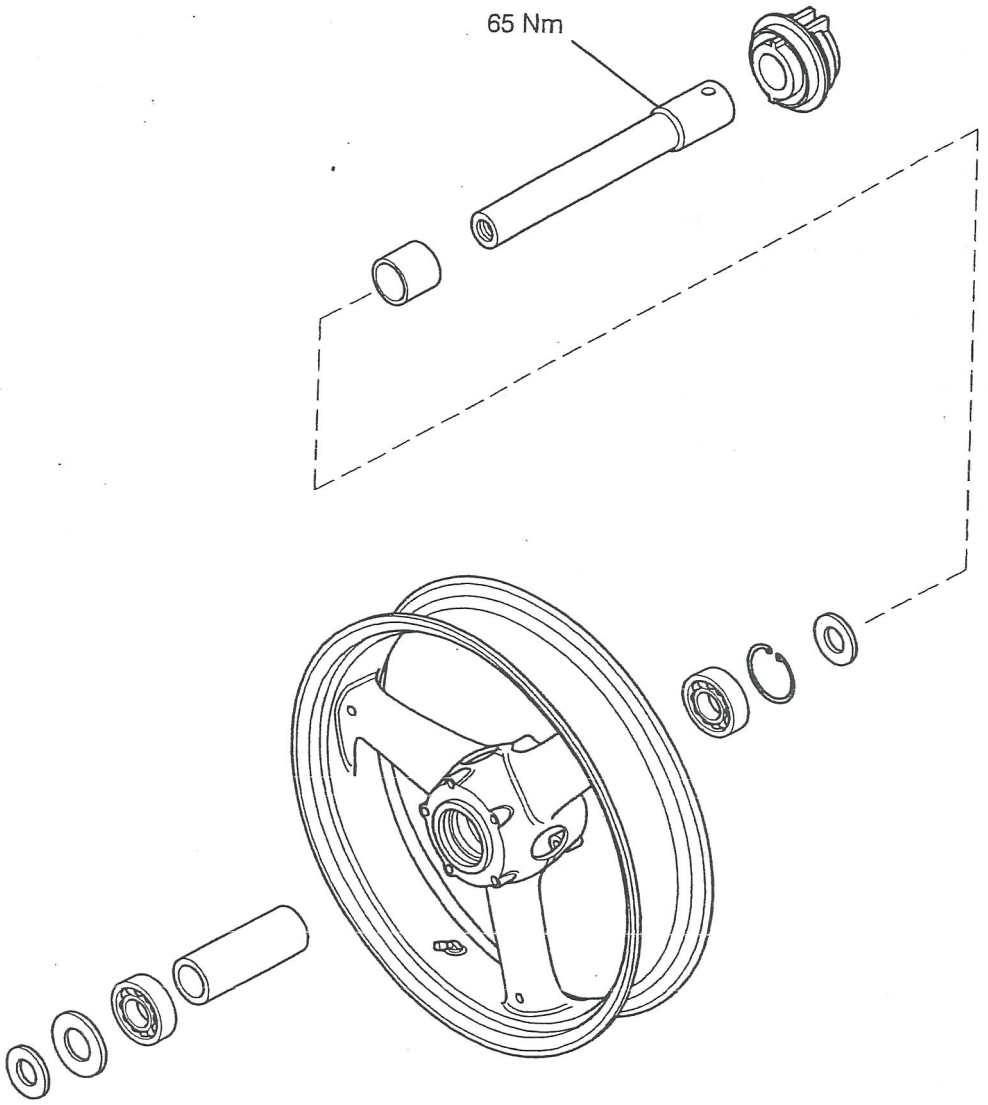

Exploded View - Rear Wheel and Final Drive

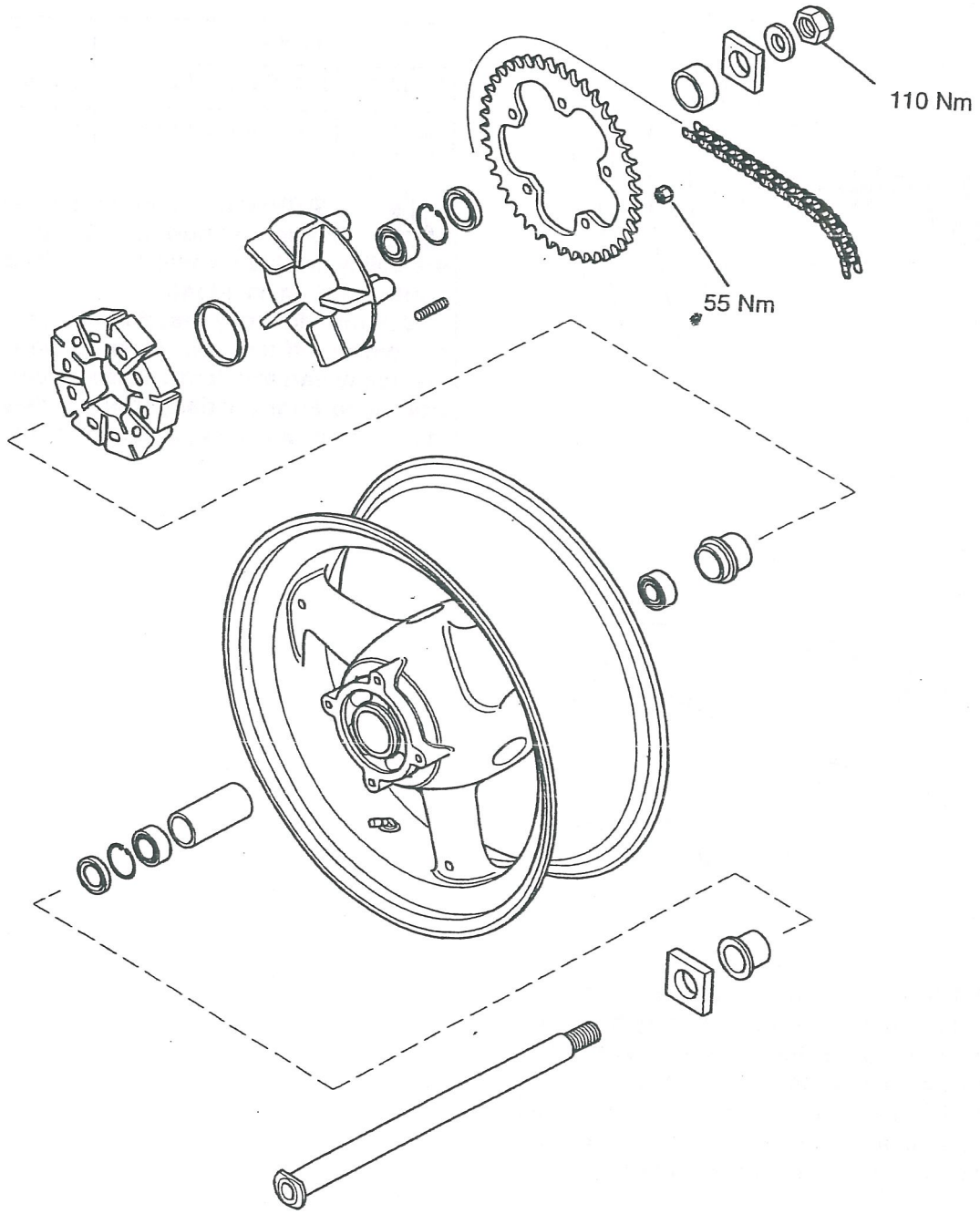

TYRES

This model is equipped with tubeless tyres, valves, and wheel rims. Only tyres marked 'TUBELESS' and tubeless type tyre valves mounted on rims marked 'SUITABLE FOR TUBELESS TYRES' can be used.

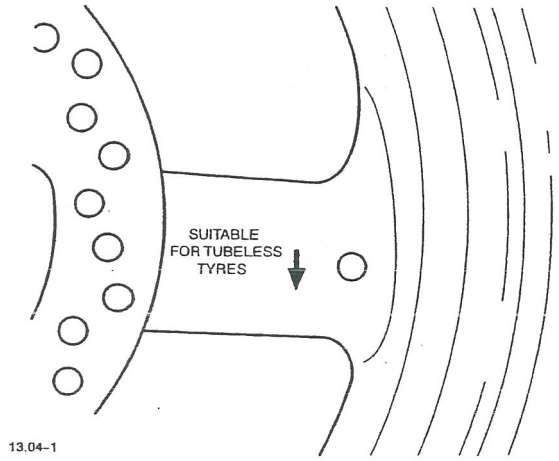

13.04-1

Wheel Marking

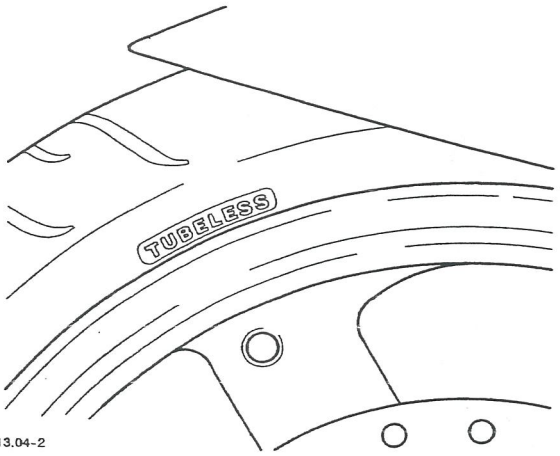

13.04-2

Tyre Marking

WARNING: Tyres that have been used on a rolling road dynamometer may become damaged. In some cases, the damage may not be visible on the external surface of the tyre.
Tyres must be replaced after such use as continued use of a damaged tyre may lead to instability, loss of control and an accident.

Tyre Pressures

Correct inflation pressure will provide maximum stability, rider comfort and tyre life. Tyre pressures should be checked frequently and adjusted as necessary. The tables below show the correct tyre pressures for each model.

Always check tyre pressures when the tyres are cold.

	TT600	Speed Four
Front	2.4 Bar (34 lb/in^2)	2.4 Bar (34 lb/in^2)
Rear	2.7 Bar (38 lb/in^2)	2.7 Bar (38 lb/in^2)

WARNING: Incorrect tyre inflation will cause abnormal tread wear and instability problems which may lead to loss of control and an accident.
Under-inflation may result in the tyre slipping on, or coming off the rim. Over-inflation will cause instability and accelerated tread wear.
Both conditions are dangerous as they may cause loss of control leading to an accident.

e Wear/Wheel Inspection

WARNING: Before starting work, ensure the motorcycle is stabilised and adequately supported. This will help prevent it from falling and causing injury to the operator or damage to the motorcycle.

As the tyre tread wears down, the tyre becomes more susceptible to puncture and failure. It is estimated that 90% of all tyre failures occur during the last 10% of tread life (90% worn). It is false economy and unsafe to use tyres until they are worn to their minimum.

All tyres are fitted with tread wear indicators. When the tyre becomes worn down as far as the top of a tread wear indicator, the tyre is worn beyond its service life and must be replaced.

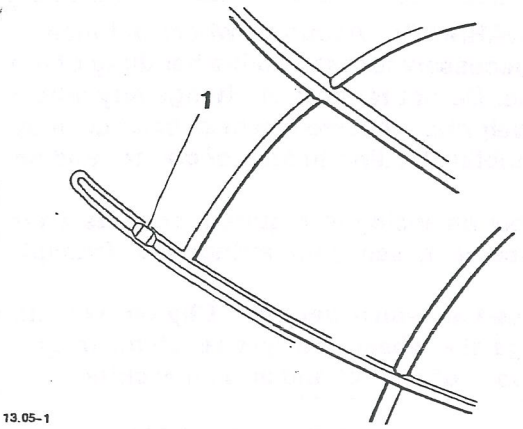

13.05-1

l. Tread Wear Indicator

n accordance with the scheduled maintenance chart, neasure the depth of the tread with a depth gauge, and ep' e any tyre that has worn to, or beyond the minimum llc..able tread depth.

ıspect wheels for cracks, splits and kerb damage. lways replace wheels that are suspected of having ecome damaged.

WARNING: Operation with excessively worn tyres is hazardous and will adversely affect traction, stability and handling which may lead to loss of control or an accident.
When tubeless tyres become punctured, leakage is often very slow. Always inspect tyres very closely for punctures.
Check the tyres for cuts, imbedded nails or other sharp objects.
Check the rims for dents or deformation. Operation with damaged or defective wheels or tyres is dangerous and loss of control or an accident could result.
Always consult your Triumph dealer for tyre replacement, or for a safety inspection of the tyres.

Minimum Recommended Tread Depth

The following chart can be used as a guide to the minimum safe tread depth.

Under 130 km/h (80mph)	2 mm (0.08 in)
Over 130 km/h (80 mph)	Rear 3 mm (0.12 in) Front 2 mm (0.08 in)

WARNING: Triumph motorcycles must not be operated above the legal road speed limit except in authorised closed course conditions.

Important Tyre Information

All Triumph motorcycles are carefully and extensively tested in a range of riding conditions to ensure that the most effective tyre combinations are approved for use on each model. It is essential that approved tyre combinations are used when purchasing replacement tyres as the use of non approved tyres or approved tyres in non approved combinations may lead to motorcycle instability. Always refer to the owner's handbook data section for details of approved tyres and tyre combinations.

WARNING: If a tyre sustains a puncture, the tyre must be replaced. Failure to replace a punctured tyre, or operation with a repaired tyre can lead to instability, loss of control or an accident.
Never use an inner tube to repair a punctured tyre. The rough surface inside the tyre can chafe the tube leading to instability, rapid deflation, loss of control and an accident.

WARNING: The use of tyres other than those listed in the specification section of the owner's handbook may adversely affect handling leading to loss of control or an accident.
Use the recommended tyre options only in the combinations given in the owner's handbook.
Do not mix tyres from different manufacturers or tyres from the same manufacturer but from another option.

WARNING: Always check tyre pressures before riding when the tyres are cold. Operation with incorrectly inflated tyres may affect handling leading to loss of control and an accident.

WARNING: Operation with excessively worn or damaged tyres will adversely affect handling and control leading to loss of control or an accident.

WARNING: Do not install tube-type tyres on tubeless rims. The bead will not seat and the tyres could slip on the rims, causing tyre deflation that may result in a loss of vehicle control and an accident.

Do not install an inner tube inside a tubeless tyre. This may cause instability and excessive heat build-up may cause the tube to burst resulting in rapid tyre deflation, loss of vehicle control and an accident.

WARNING: Accurate wheel balance necessary for safe, stable handling of the motorcycle. Do not remove or change any wheel balance weights. Incorrect wheel balance may cause instability leading to loss of control and an accident.
When wheel balancing is required, such as after tyre replacement, see your authorised Triumph Dealer.
Only use self-adhesive weights. Clip on weights will damage the wheel and tyre resulting in tyre deflation, loss of control and and an accident.

WARNING: When replacement tyres are required, consult your authorised Triumph Dealer who will arrange for the tyres to be fitted according to the tyre manufacturers instructions.
When tyres are replaced, allow time for the tyre seat itself to the rim (approximately 24 hours). During this seating period, ride cautiously as an incorrectly seated tyre could cause loss of control or an accident. Initially, the new tyre will not produce the same handling characteristics as the worn tyre and the rider must allow adequate riding distance (approximately 100 miles) to become accustomed to the new handling characteristics.
After both 24 hours and 100 miles, the tyre pressures should be checked and adjusted and the tyre examined for correct seating and rectified as necessary.
Use of a motorcycle when not accustomed to its handling characteristics may lead to loss of control and an accident.

RONT WHEEL

Removal

WARNING: Before starting work, ensure the motorcycle is stabilised and adequately supported. This will help prevent it from falling and causing injury to the operator or damage to the motorcycle.

1. Position the motorcycle on a paddock stand.
2. Detach both brake calipers.

NOTE:

- **It is not necessary to disconnect the brake hoses.**

WARNING: Do not allow the calipers to hang on the brake hoses as this may damage the hoses.

Damaged hoses could cause brake failure leading to loss of control and an accident.

3. Raise and support the front of the motorcycle.
4. Slacken both pinch bolts at the lower end of the left hand fork.

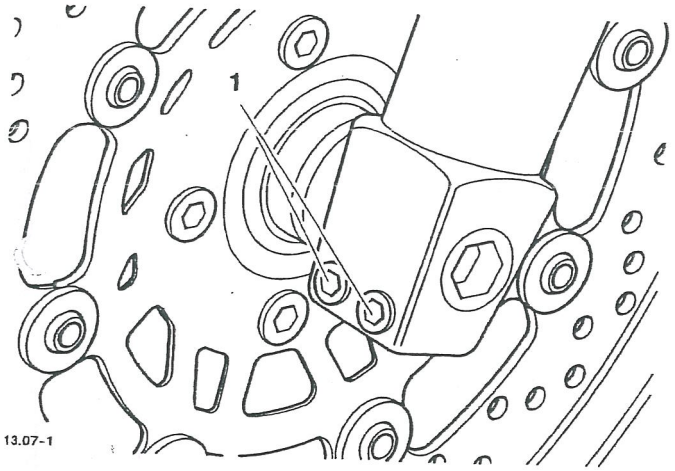

1. Fork pinch bolts

5. Release and remove the wheel spindle which is threaded into the right hand fork.
6. Remove the wheel, recovering the speedometer drive from the left hand side, and the spacer from the right.

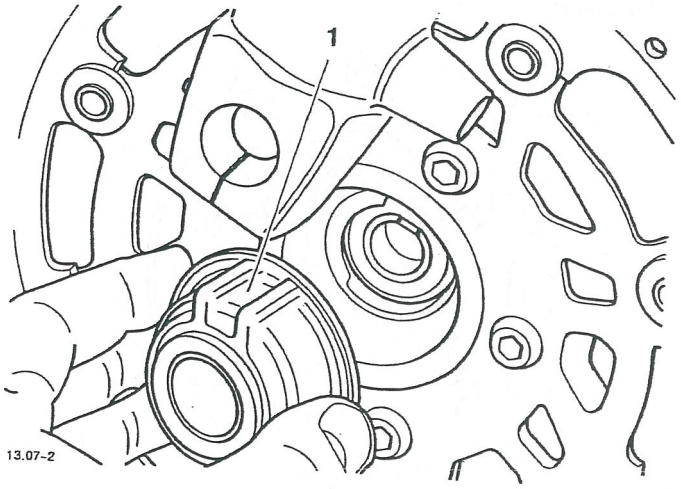

1. Speedometer drive

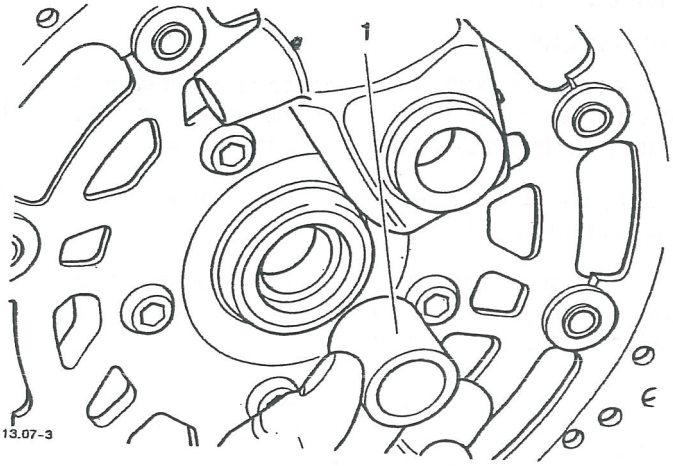

1. Spacer

7. Place the wheel on wooden blocks.

WARNING: Do not allow the wheel to rest on either brake disc as this may damage the disc and could lead to an accident.

CAUTION: To prevent wheel and bearing damage, observe absolute cleanliness and ensure there is no dirt ingress to the wheel bearings while the wheel is removed.

Never allow the speedometer drive to hang on the cables. Always support the speedometer drive during the period that the wheel is removed.

8. Thoroughly clean all components and inspect for wear or damage.

Installation

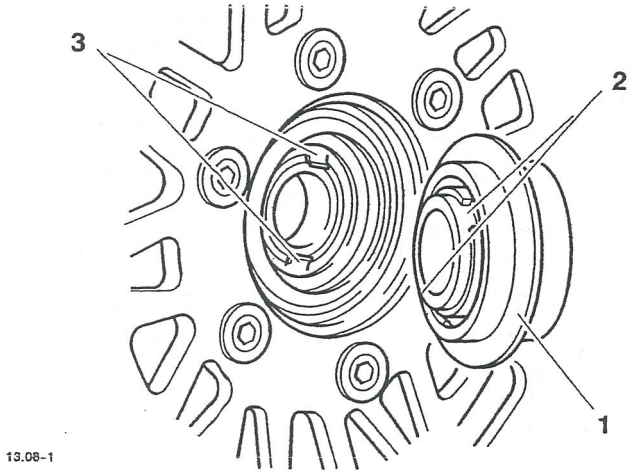

1. **Speedometer drive**
2. **Drive cut-outs**
3. **Drive tongues**

1. Position the speedometer drive into the left side of the wheel hub. Ensure the two drive cut-outs engage with the drive tongues in the wheel.
2. Lightly smear the spacer with grease and locate in the right hand side of the hub.
3. Position the wheel between the forks, locating the slot in the speedometer drive with the lug on the inside face of the left hand fork.

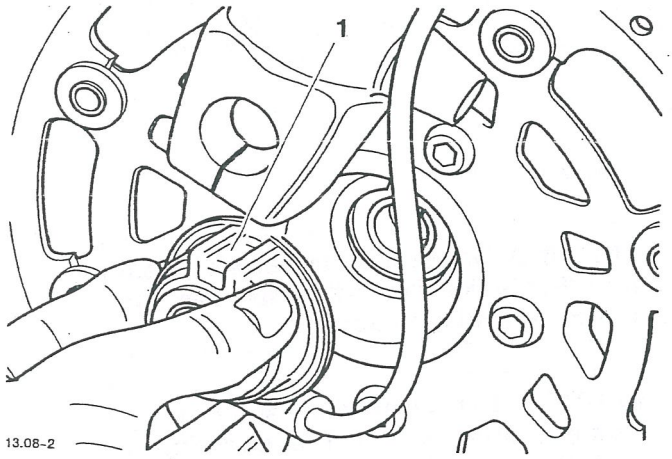

1. **Speedometer drive locating slot**

4. Refit the wheel spindle from the left hand side and tighten to **65 Nm.**
5. Lower the motorcycle to the ground and pump the front suspension to allow the left hand fork to 'float' to its natural position on the wheel spindle.
6. Tighten the left hand fork pinch bolts to **20 Nm.**

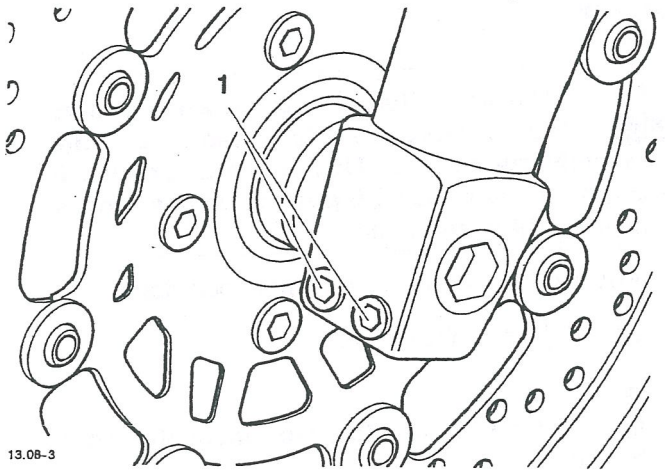

1. **Fork pinch bolts**

7. Thoroughly clean and degrease the brake discs.
8. Fit the brake calipers, tightening the mounting bolts to **40 Nm.**
9. Check the operation of the front brake. Rectify as necessary.

REAR WHEEL

Removal

WARNING: Before starting work, ensure the motorcycle is stabilised and adequately supported. This will help prevent it from falling and causing injury to the operator or damage to the motorcycle.

1. Support the motorcycle on a paddock stand such that it does not prevent removal of the wheel.

WARNING: If the engine has recently been running, the exhaust system will be hot to the touch.

Before working on or near the exhaust system, allow sufficient time for the exhaust system to cool as touching any part of a hot exhaust system could cause burn injuries.

2. Remove the screws securing the rear brake hose to the swinging arm.

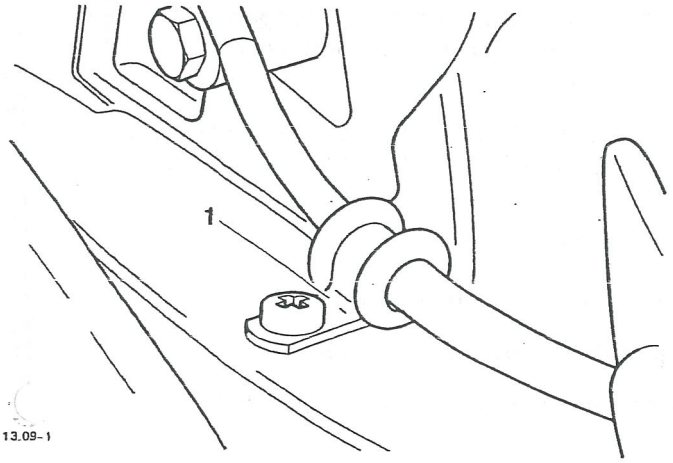

1. Hose clip

3. Remove the nut from the rear wheel spindle.

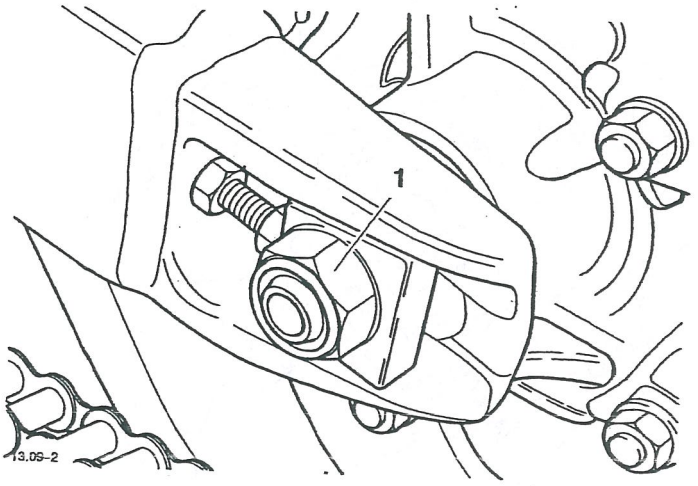

1. Rear wheel spindle nut.

4. Support the wheel and withdraw the wheel spindle.
5. Raise the brake caliper and carrier and roll the wheel forward until the chain can be detached from the rear sprocket.
6. Withdraw the wheel and collect the flanged spacer from the right hand side and the plain spacer from the left.
7. Place the wheel on wooden blocks with the drive sprocket uppermost.
8. If required, remove the rear brake disc and discard the disc bolts.
9. Remove the final drive as described in the rear suspension section.

Installation

1. Thoroughly clean and degrease the brake disc.
2. Fit the brake disc and tighten new disc bolts to **22 Nm.**
3. Refit the final drive assembly as described in the rear suspension section.

4. Position the wheel within the swinging arm and refit the chain to the final drive sprocket.

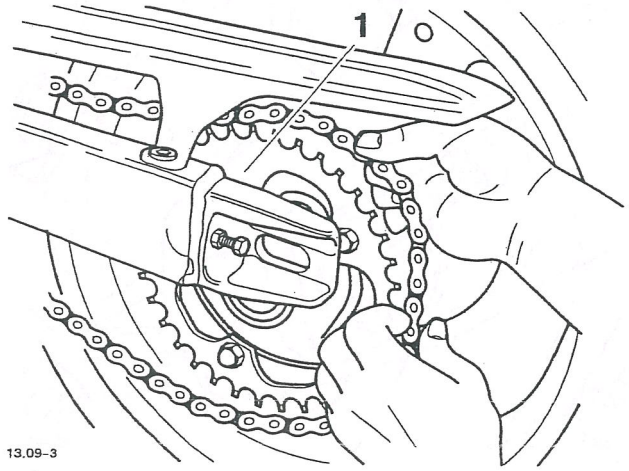

1. Fitting the chain

5. Position the rear brake calliper and carrier into its correct location. Align the slot in the carrier with the boss on the swinging arm.

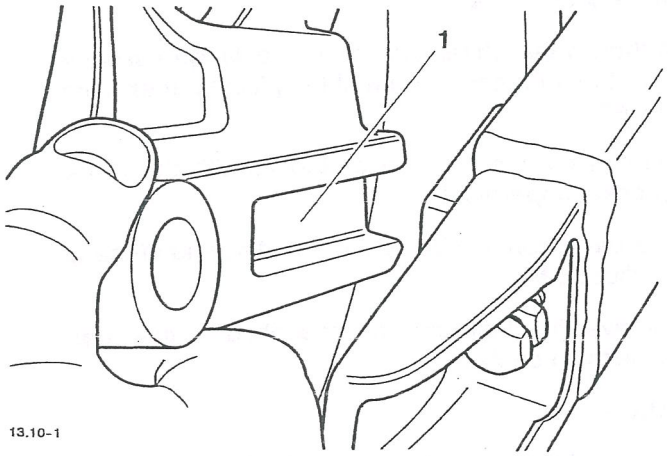

1. Carrier locating slot

6. Refit the wheel sleeves, flanged spacer to the right hand side (flange facing outwards) and plain spacer to the left.

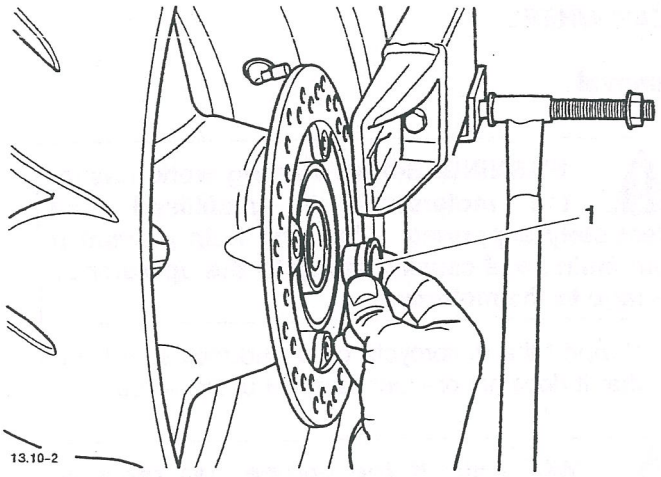

1. Flanged spacer (right side)

7. Lift the rear wheel into position, aligning the wheel, caliper carrier and swinging arm.

8. Fit the wheel spindle with the threaded end facing to the left.

CAUTION: Check that the spacers are still correctly positioned. Incorrectly fitted wheel spacers will cause a dangerous riding condition leading to loss of motorcycle control and an accident.

9. Keeping the chain adjuster blocks in contact with the adjuster bolts, tighten the wheel spindle nut to **110 Nm.**

10. Remove the paddock stand.

11. Check the operation of the rear brake.

12. Place the motorcycle on its side stand.

13. Check and, if necessary, adjust the chain.

BODYWORK & FRAME

CONTENTS

	Page
Exploded View - Frame	14.2
Exploded View - Seat Rails	14.3
Exploded View - Cockpit and Mountings - TT600	14.4
Exploded View - Cockpit and Mountings - Speed Four	14.5
Exploded View - Lower Fairings	14.6
Exploded View - Rear Panels	14.7
Exploded View - Footrests and Mountings	14.8
Frame, Footrests And Fairings	14.9
Inspection	14.9
Seat	14.10
Removal	14.10
Refit	14.10
Side Panels	14.10
Removal	14.10
Installation	14.11
Seat End Cap	14.11
Removal	14.11
Installation	14.11
Lower Fairing	14.12
Removal	14.12
Installation	14.14
Cockpit	14.14
Removal	14.14
Installation	14.15

Exploded View - Frame

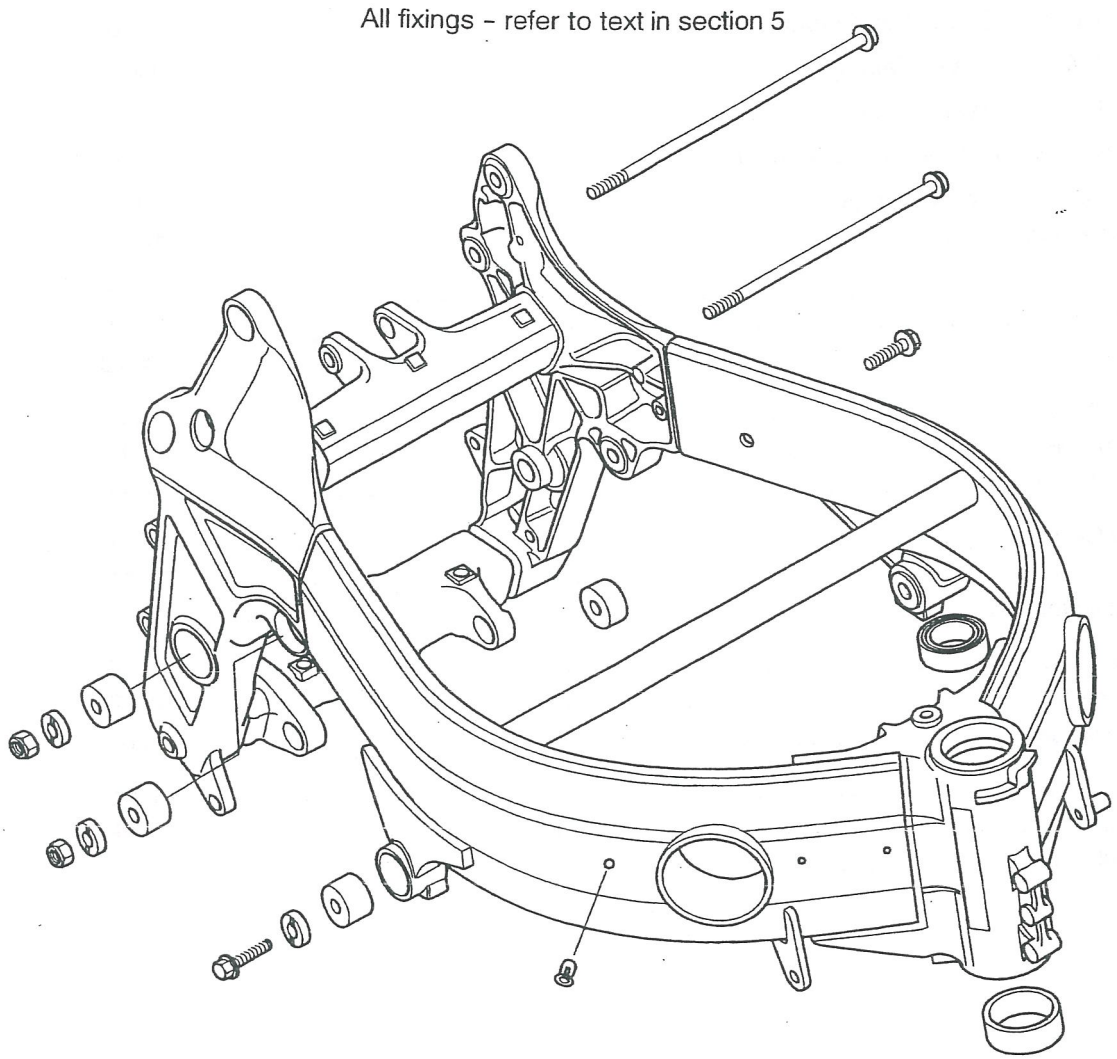

Exploded View - Seat Rails

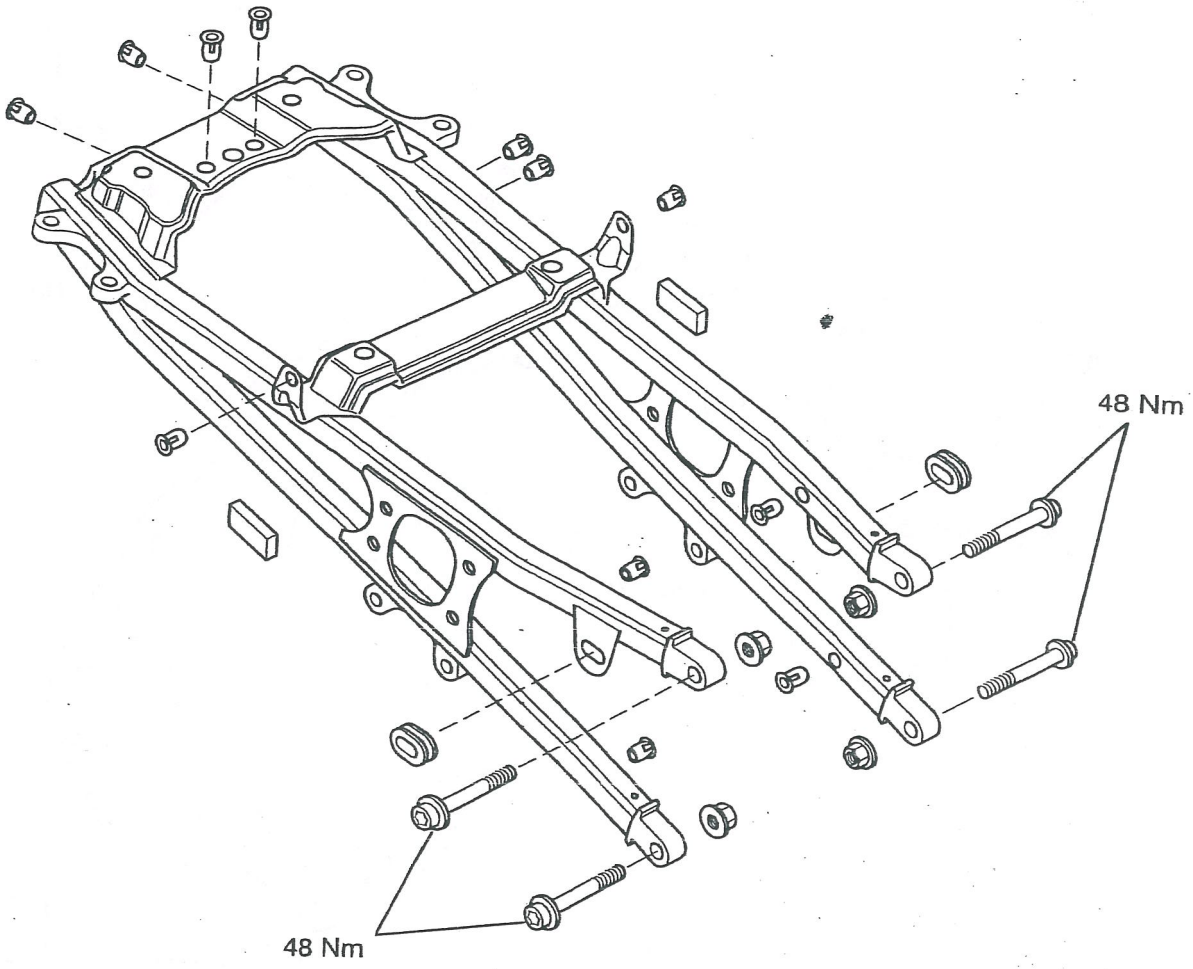

Exploded View - Cockpit and Mountings - TT600

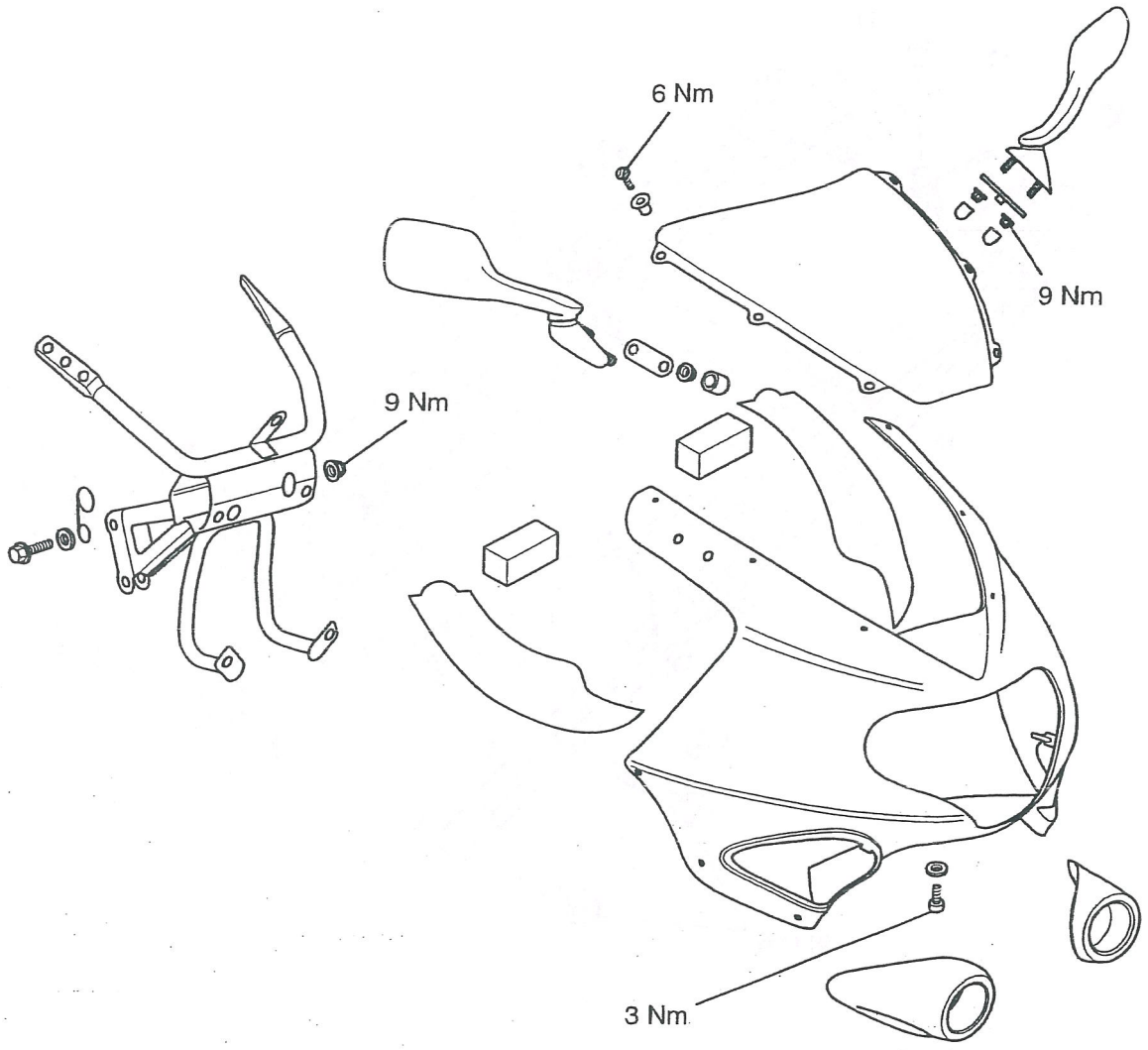

Exploded View - Cockpit and Mountings - Speed Four

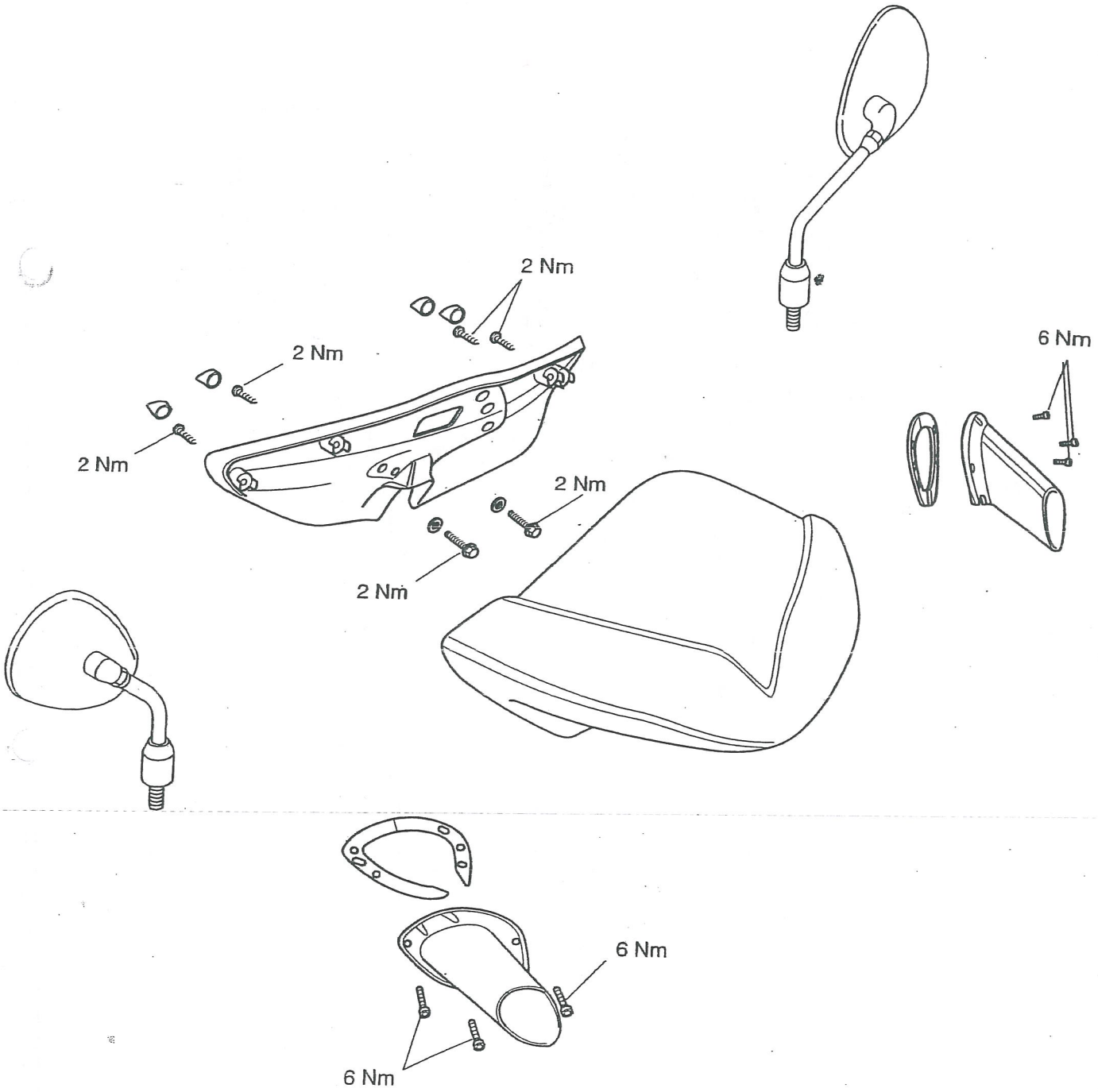

Exploded View - Lower Fairings

All fixings - refer to text

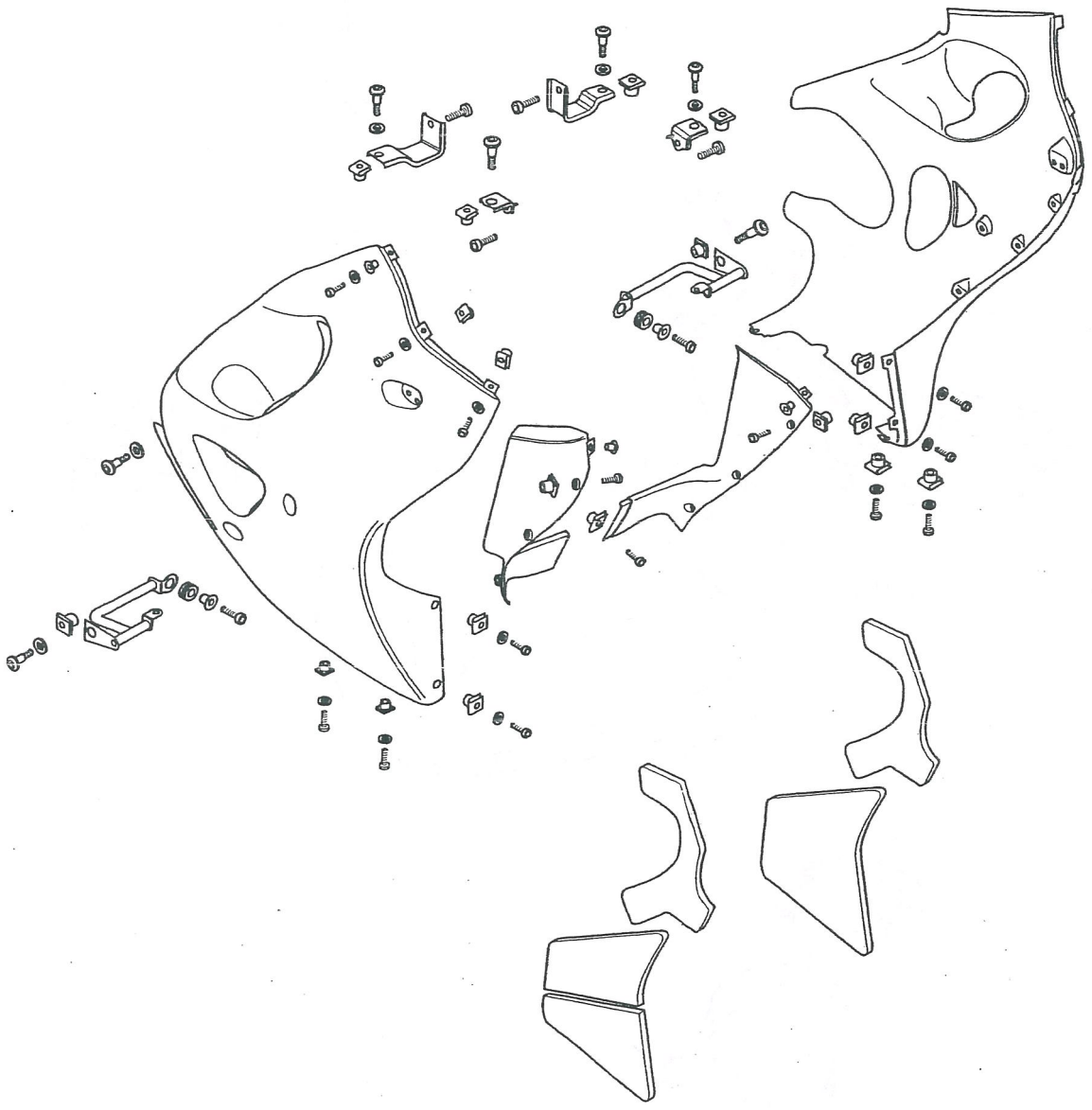

Exploded View - Rear Panels

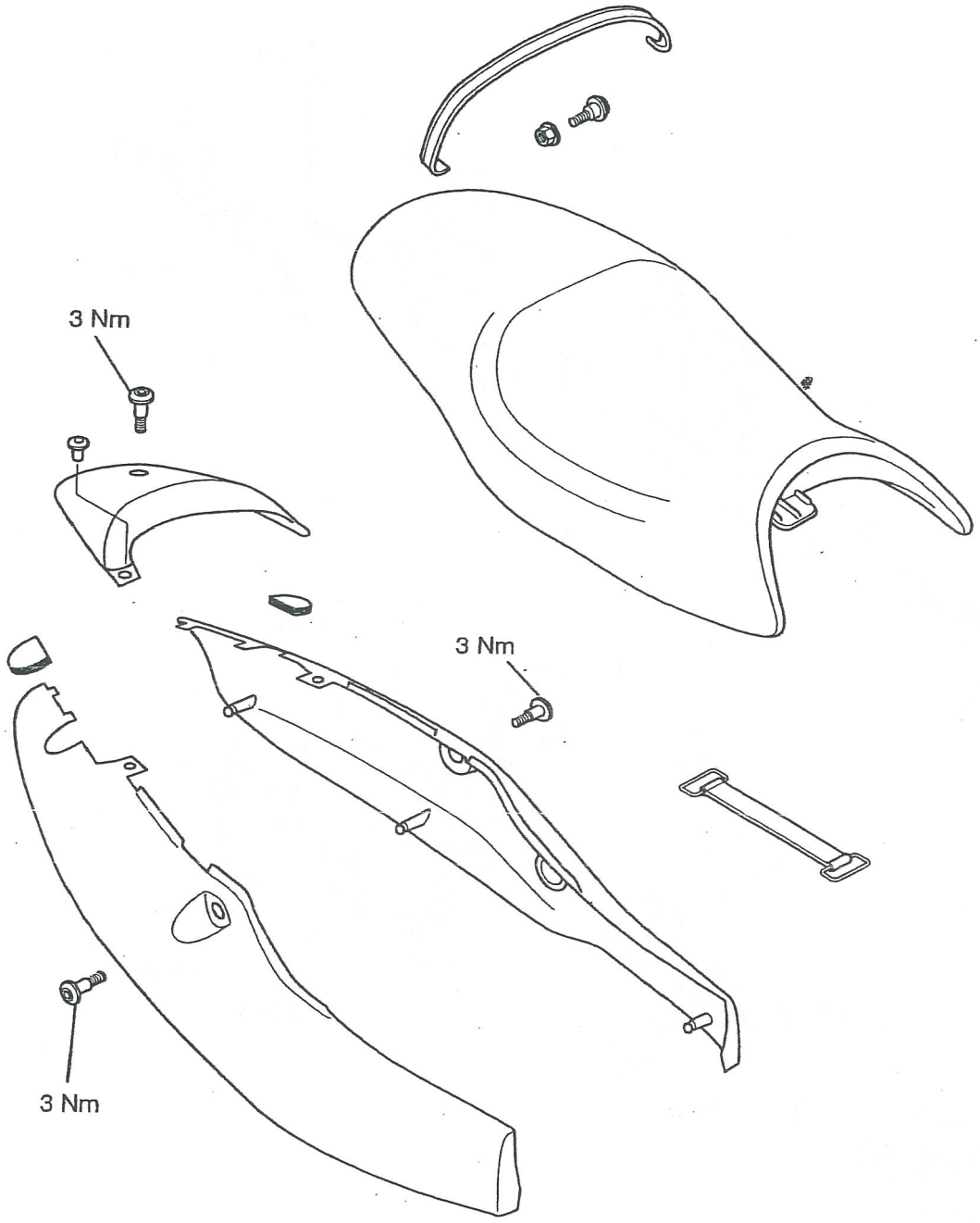

Exploded View - Footrests and Mountings

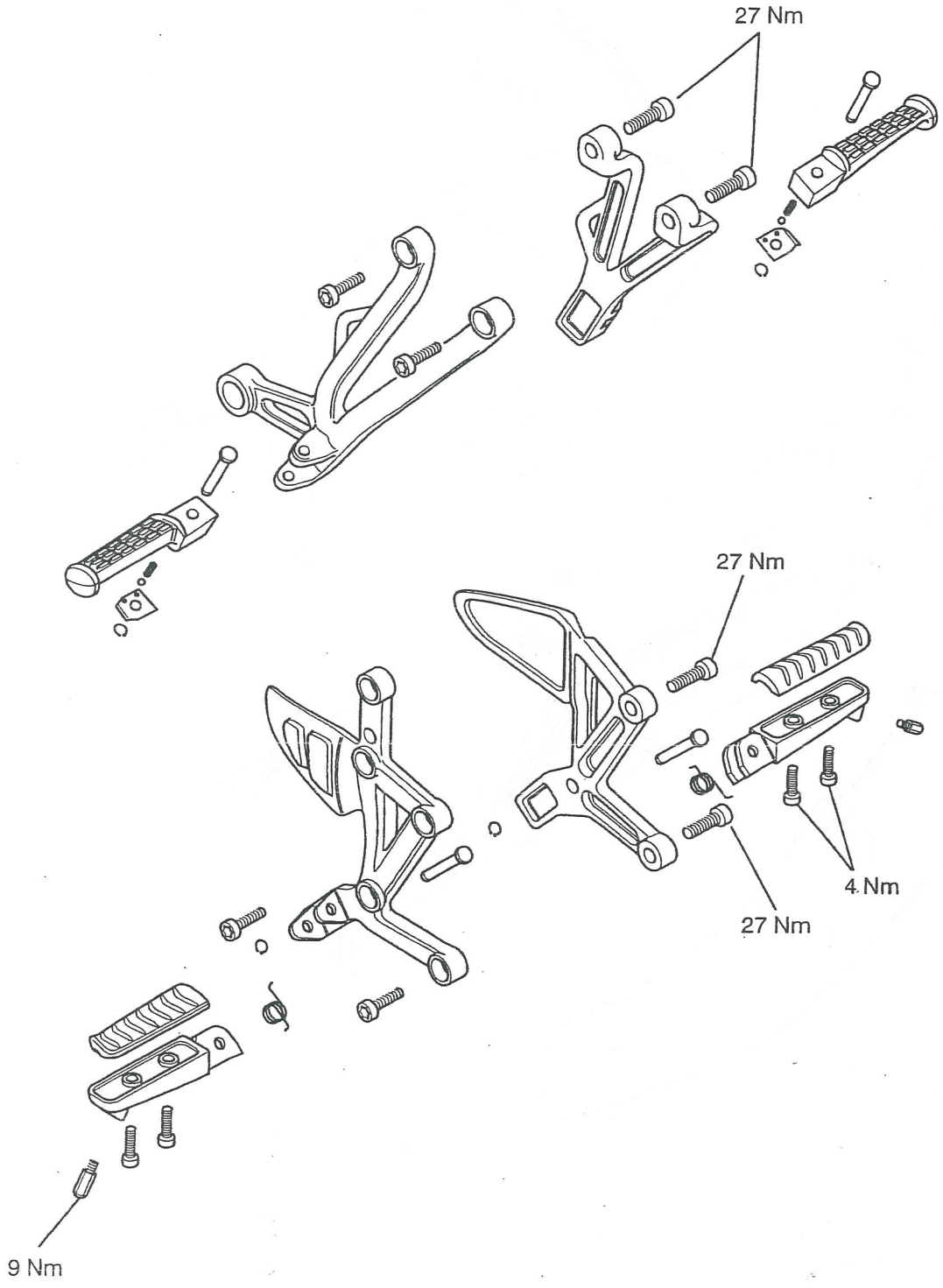

FRAME, FOOTRESTS AND FAIRINGS

Inspection

WARNING: Before starting to work, ensure the motorcycle is stabilised and adequately supported. This will help prevent it from falling and causing injury to the operator or damage to the motorcycle.

1. Inspect the frame, footrests and fairings for damage, cracks, chafing and other dangerous conditions. Check all fairing and frame fixings for security.

2. Inspect the bank angle pegs for wear. If more than 50% of the radiused end is worn away, they must be replaced.

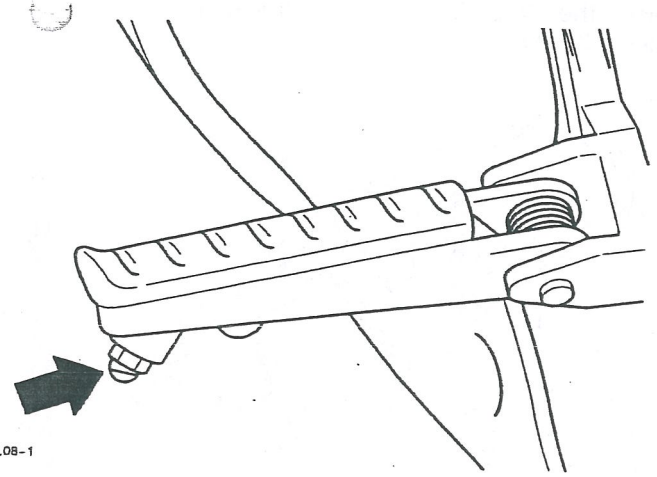

.08-1

ank angle peg

WARNING: Use of a motorcycle with footrests worn beyond the maximum limit will allow the motorcycle to be banked to an unsafe angle. The bank angle pegs must not be used as a guide to how far the motorcycle may be banked safely. This depends on many various conditions including, but not limited to, road surface, tyre condition and weather. Banking to an unsafe angle may cause instability, loss of control and an accident causing injury or death.

WARNING: If the motorcycle is involved in an accident or collision it must be taken to an authorised Triumph dealer for repair or inspection.

Any accident can cause damage to the motorcycle which, if not correctly repaired, may cause another accident which may result in injury or death.

WARNING: The frame must not be modified in any way. Any modification to the frame, such as welding or drilling, may weaken the structure causing an unsafe riding condition leading to loss of motorcycle control and an accident.

SEAT

Removal

WARNING: Before starting to work, ensure the motorcycle is stabilised and adequately supported. This will help prevent it from falling and causing injury to the operator or damage to the motorcycle.

NOTE:

- **The seat lock is situated in the left hand side panel, above the rear footrest.**

1. Insert the ignition key into the seat lock and turn the key anti-clockwise while pressing down on the rear part of the seat.

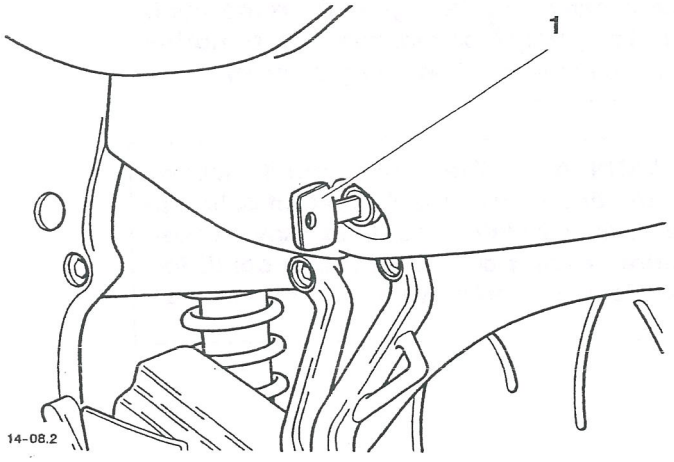

1. Seat Lock

2. To detach, lift the rear of the seat and slide rearwards.

Refit

1. Engage the front section of the seat to the fuel tank and press down on the rear to engage in the seat lock.

NOTE:

- **An audible 'click' can be heard when the seat is correctly engaged in the lock.**

2. Finally, grasp the seat and check that the rear seat is secure in the seat lock

CAUTION: To prevent detachment of the seat during riding, after fitting always grasp the seat (or accessory cover) and pull firmly upwards. If the seat/cover is correctly secured in the lock, it will not detach from the rear frame.

SIDE PANELS

NOTE:

- **The side panels and rear panel are removed individually, not as an assembly.**

Removal

WARNING: Before starting to work, ensure the motorcycle is stabilised and adequately supported. This will help prevent it from falling and causing injury to the operator or damage to the motorcycle.

1. Remove the seat.
2. Disconnect the battery, negative (black) lead first.
3. Release the threaded fixings shown in the illustration below.

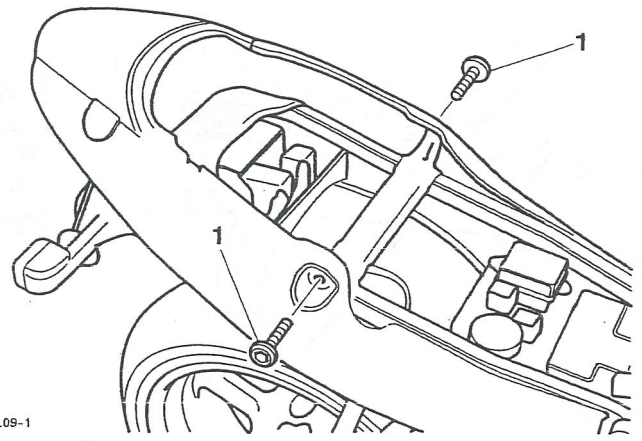

1. Threaded fixings

4. Release the retaining stud from the upper rear of each side panel by pushing the centre pin down through the stud. Retain the pins.

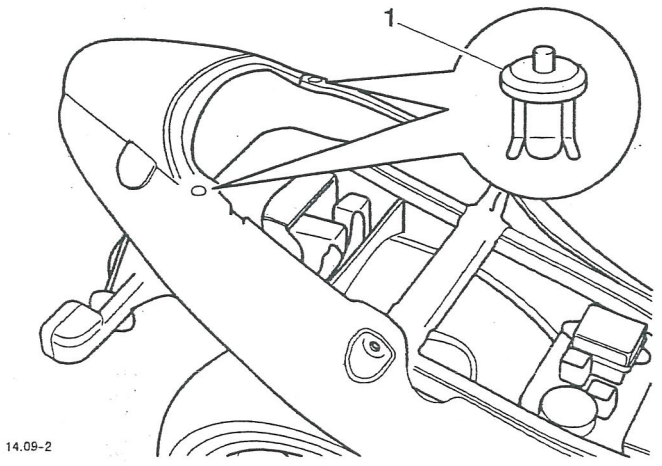

1. Side panel retaining studs

NOTE:

- **The side panels are retained at the front and rear by bayonets which locate in rubber grommets.**

5. To release the panel, gently pull the panel outwards at both ends using hand pressure only.

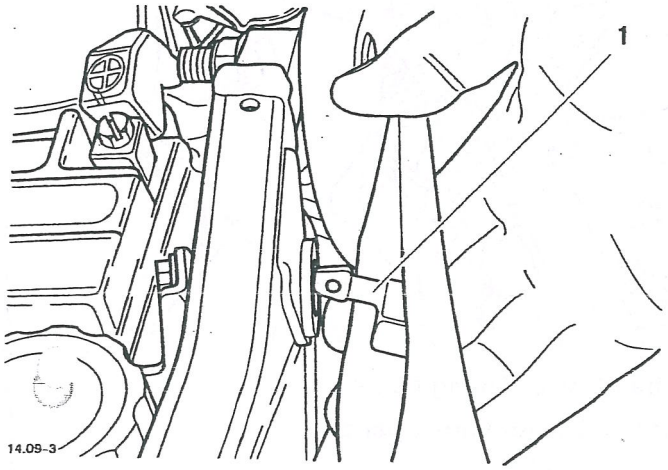

1. Bayonet

6. Withdraw the side panel.

Installation

7. Installation is the reverse of the removal procedure with the exception of the following:

Reconnect the battery, positive (red) lead first.

Refit the retaining studs through the two panels. Press the retaining pin into the centre hole until flush with the top surface of the stud.

Tighten the threaded panel fixings to **3 Nm.**

SEAT END CAP

Removal

WARNING: Before starting work, ensure the motorcycle is stabilised and adequately supported. This will help prevent it from falling and causing injury to the operator or damage to the motorcycle.

1. Remove the seat.
2. Disconnect the battery, negative (black) lead first.
3. Remove both side panels as described earlier in this section.
4. Release the threaded fixing in the centre of the end cap.

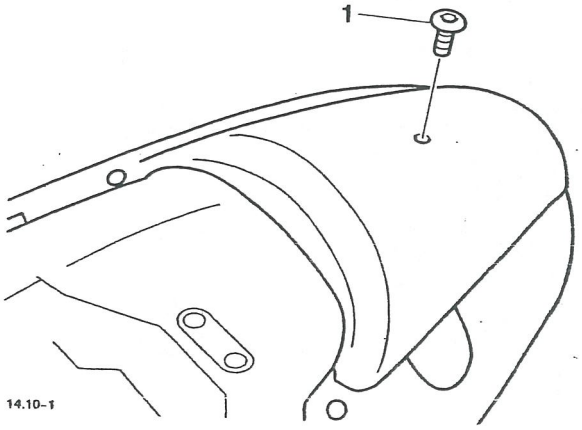

1. Threaded fixing

5. Remove the end cap.

Installation

1. Installation is the reverse of the removal procedure with the exception of the following:

Reconnect the battery, positive (red) lead first.

Refit the retaining studs through the two side panels. Press the retaining pin into the centre hole until flush with the top surface of the stud.

Tighten the threaded side panel fixings to **3 Nm.**

Tighten the end cap fixing to **3 Nm.**

LOWER FAIRING

Removal

WARNING: Before starting work, ensure the motorcycle is stabilised and adequately supported. This will help prevent it from falling and causing injury to the operator or damage to the motorcycle.

NOTE:

- **Each lower fairing assembly comprises a lower fairing panel and an air duct.**

1. Place the motorcycle on a paddock stand.
2. Remove the seat.
3. Disconnect the battery, negative (black) lead first.
4. Remove the cockpit infill panels by carefully raising them from their locating dowels.

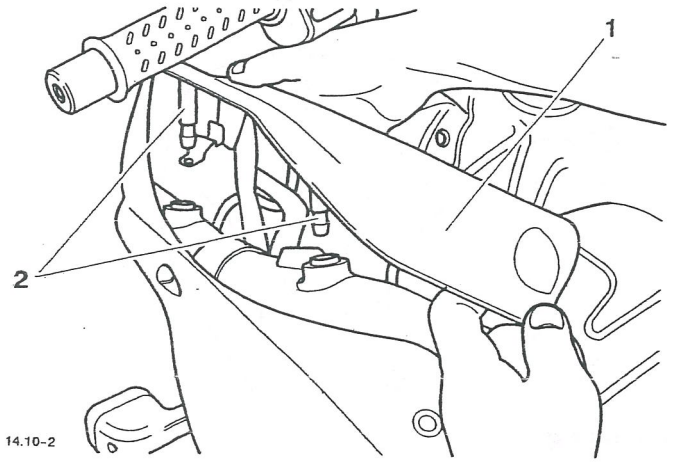

1. Infill panel

2. Locating dowels

5. Remove the fixings securing the left and right hand lower fairings/cooling ducts to each other.

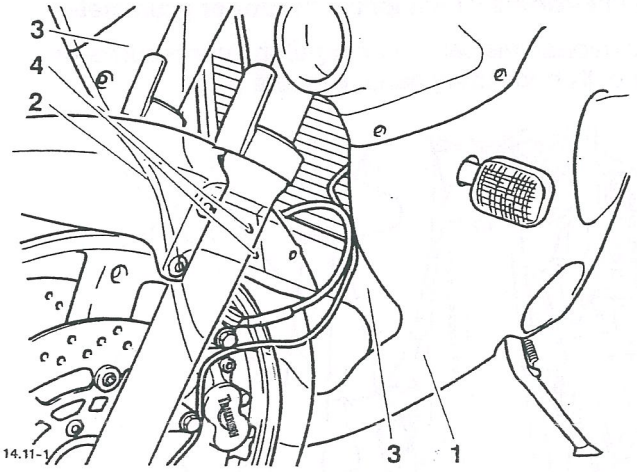

1. Left hand lower fairing panel

2. Right hand lower fairing panel

3. Cooling ducts

4. Fixings

6. Remove the fixings securing the cockpit to the right hand lower fairing panel.

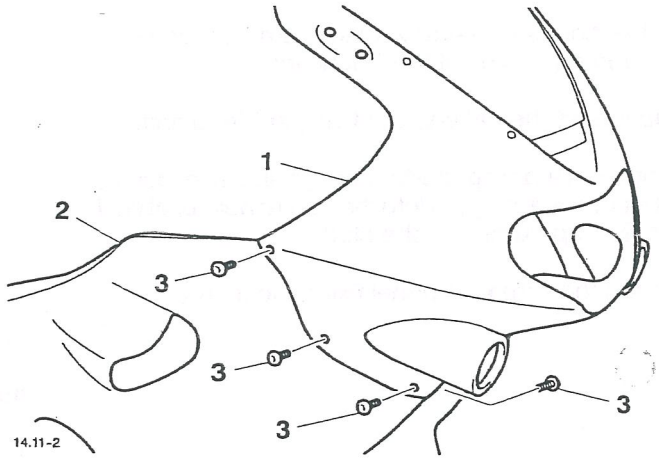

1. Cockpit

2. Right hand lower fairing

3. Fixings

7. Disconnect the right hand indicator at its connector with the harness.

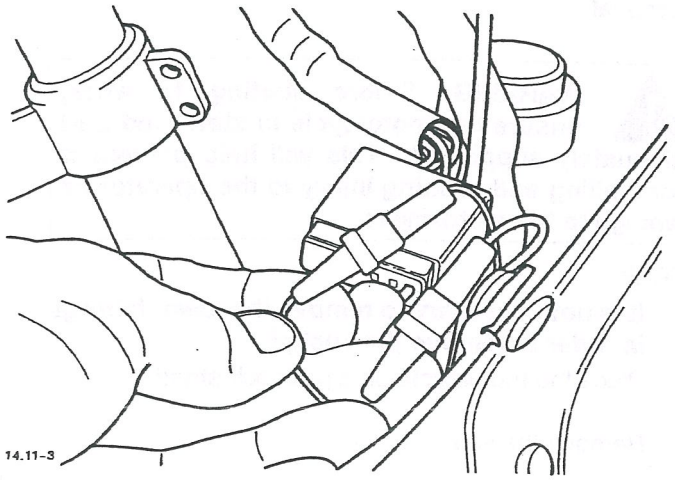

Right hand indicator connection

8. Remove the large-head fairing fixings and remove the panel.

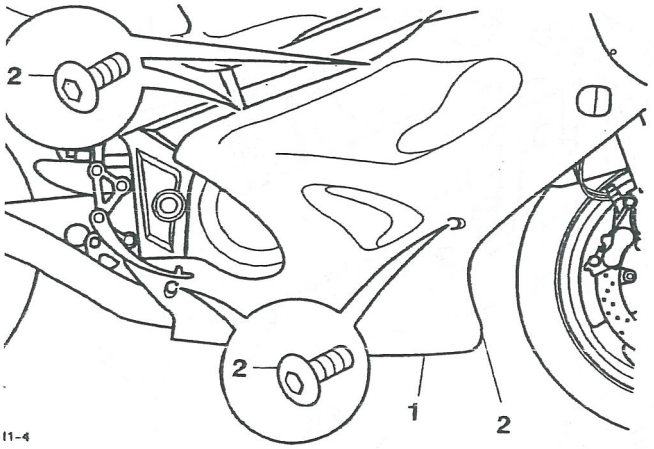

1. **Right hand lower fairing**
2. **Fixings**

9. Remove the fixings securing the cockpit to the left hand lower fairing panel.

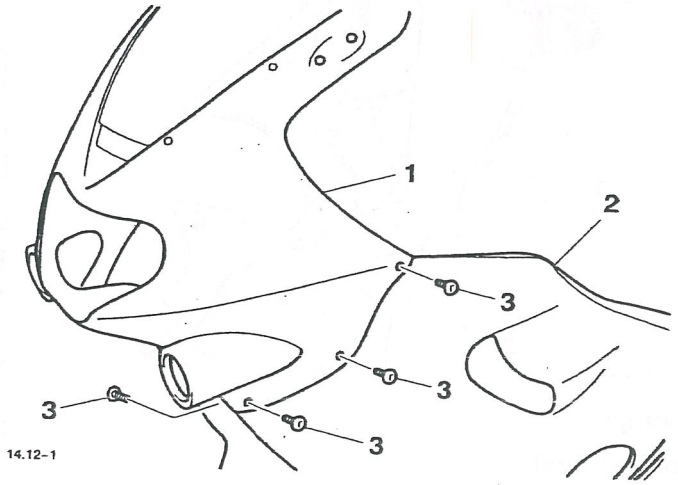

1. **Cockpit**
2. **Left hand lower fairing**
3. **Fixings**

10. Disconnect the left hand direction indicator at its connector with the harness.

11. Remove the large headed fairing fixings and remove the panel.

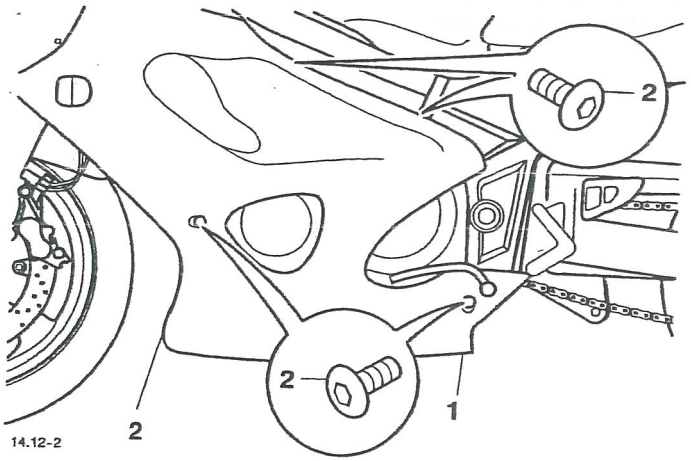

1. **Left hand lower fairing**
2. **Fixings**

12. Separate the cooling ducts from the lower fairings by releasing the three screws which secure it to the panel.

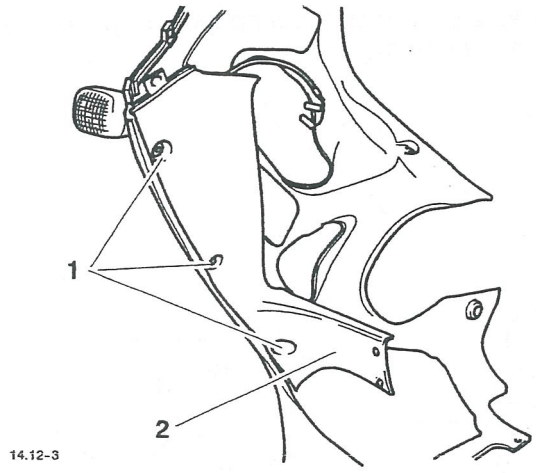

1. Fixings

2. Cooling duct

Installation

1. Installation is the reverse of removal noting the following.

NOTE:

- **Tighten all fairing fixings to 3 Nm.**
- **Reconnect the battery, positive (red) lead first.**
- **Check for correct operation of the indicators. Rectify as necessary.**

COCKPIT

Removal

WARNING: Before starting to work, ensure the motorcycle is stabilised and adequately supported. This will help prevent it from falling and causing injury to the operator or damage to the motorcycle.

NOTE:

- **It is not necessary to remove the lower fairings in order to remove the cockpit.**

1. Place the motorcycle on a paddock stand.
2. Remove the seat.
3. Disconnect the battery, negative (black) lead first.
4. Remove the cockpit infill panels by carefully raising them from their locating dowels.

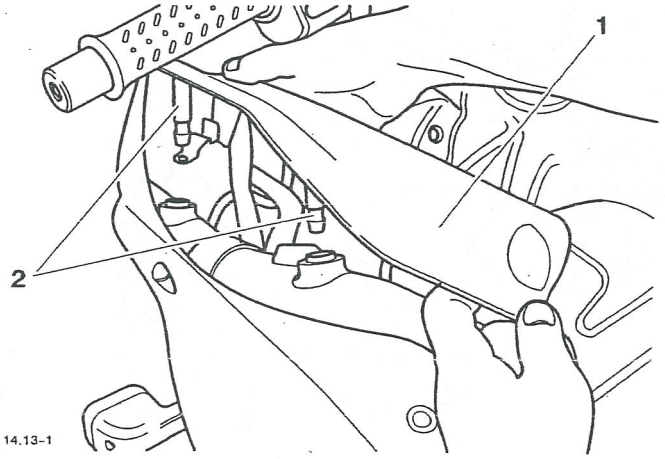

1. Infill panels

2. Locating dowels

5. Remove both mirrors.

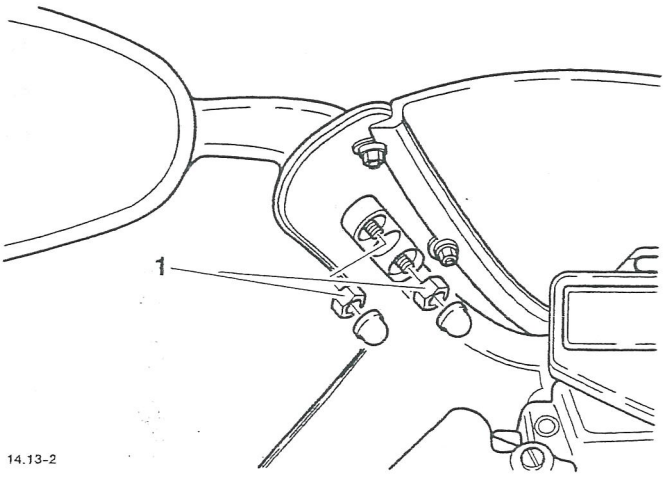

1. Mirror Fixings

6. Remove the fixings securing the cockpit to the lower fairing panels.

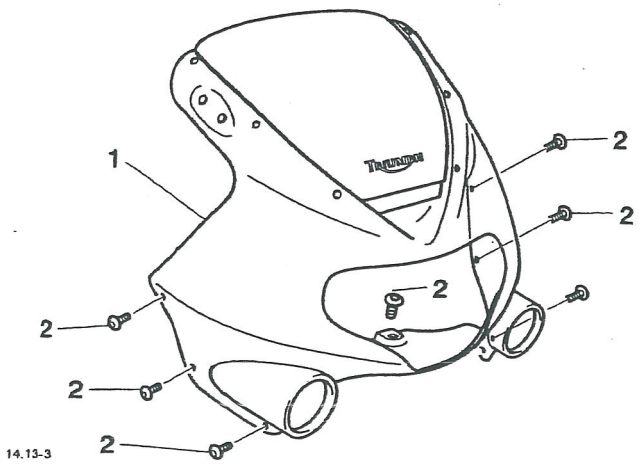

Cockpit

2. Cockpit Fixings

> **CAUTION: Take care when removing the cockpit as the pillars which locate the cockpit to the headlight are fragile.**

7. Ease the cockpit forward and clear of the motorcycle.

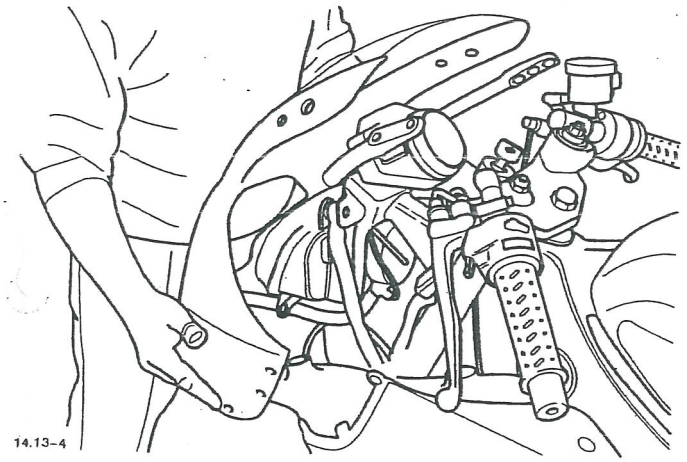

Removing the cockpit

Installation

1. Position the cockpit ensuring the two long locating pillars are fitted into the rubber bushes in the headlight.

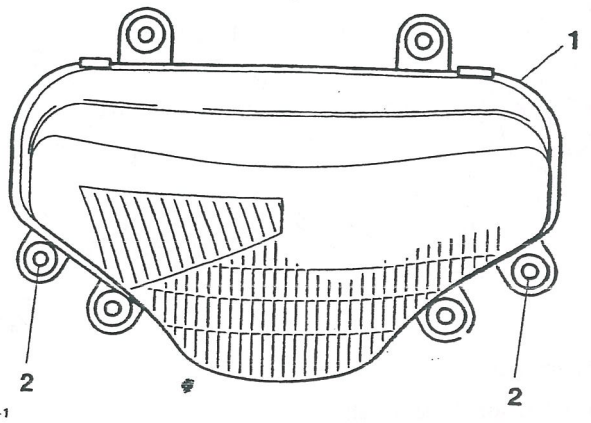

1. Headlight

2. Rubber bushes

2. Locate the air intake ducts from the airbox into the back of the air intakes in the cockpit fairing. Ensure the ducts are located as shown in the diagram below (shown in section).

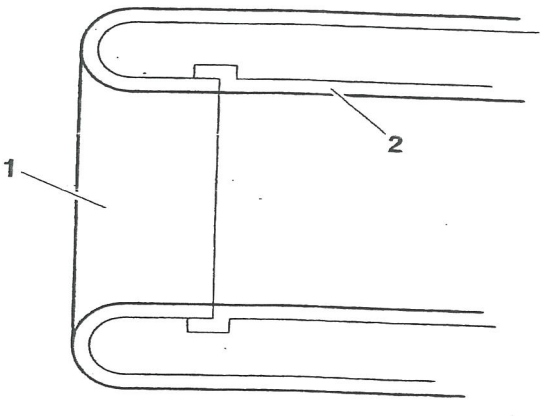

1. Cockpit intake

2. Air intake duct

3. Locate the cockpit to the lower fairings. Tighten the fixings to **3 Nm**.

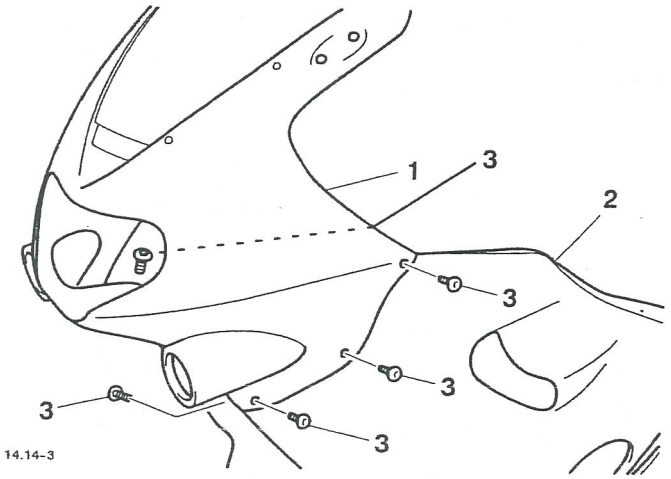

1. Cockpit

2. Left hand lower fairing

3. Fixings

4. Refit the cockpit infill panels.

5. Refit the mirrors. Tighten the mirror fixings to **9 Nm.**

6. Reconnect the battery, positive (red) lead first.

7. Refit the seat.

ELECTRICAL SYSTEM

CONTENTS

	Page
Exploded Views	15.2
Battery	15.7
Battery Removal	15.7
Battery Installation	15.7
Battery Charging	15.8
Battery Maintenance	15.8
Fuses	15.9
Fuse Identification	15.9
Relays	15.9
Identification and Location	15.9
Headlight - TT600	15.10
Headlight Adjustment	15.10
Headlight / Position Light Bulb Replacement	15.10
Headlight - Speed Four	15.12
Headlight Adjustment	15.12
Headlight / Position Light Bulb Replacement	15.13
Rear Light	15.14
Bulb Replacement	15.14
Indicator Lights	15.14
Bulb replacement	15.14
Alternator	15.15
Removal	15.15
Assembly	15.16
Starter Motor	15.17
Removal	15.17
Installation	15.17
Instruments	15.18
Removal	15.18
Assembly	15.18
Road Speed Sensor	15.19
Test Procedure	15.19
Starting/Charging Circuit Diagram - TT600 to VIN 161332	15.20
Starting/Charging Circuit Diagram - TT600 & Speed Four from VIN 161333	15.22
Lighting Circuit Diagram - TT600	15.24
Lighting Circuit Diagram - Speed Four	15.26
Wiring Circuit Diagram - TT600	15.28
Wiring Circuit Diagram - Speed Four	15.30

Expioded View - instruments

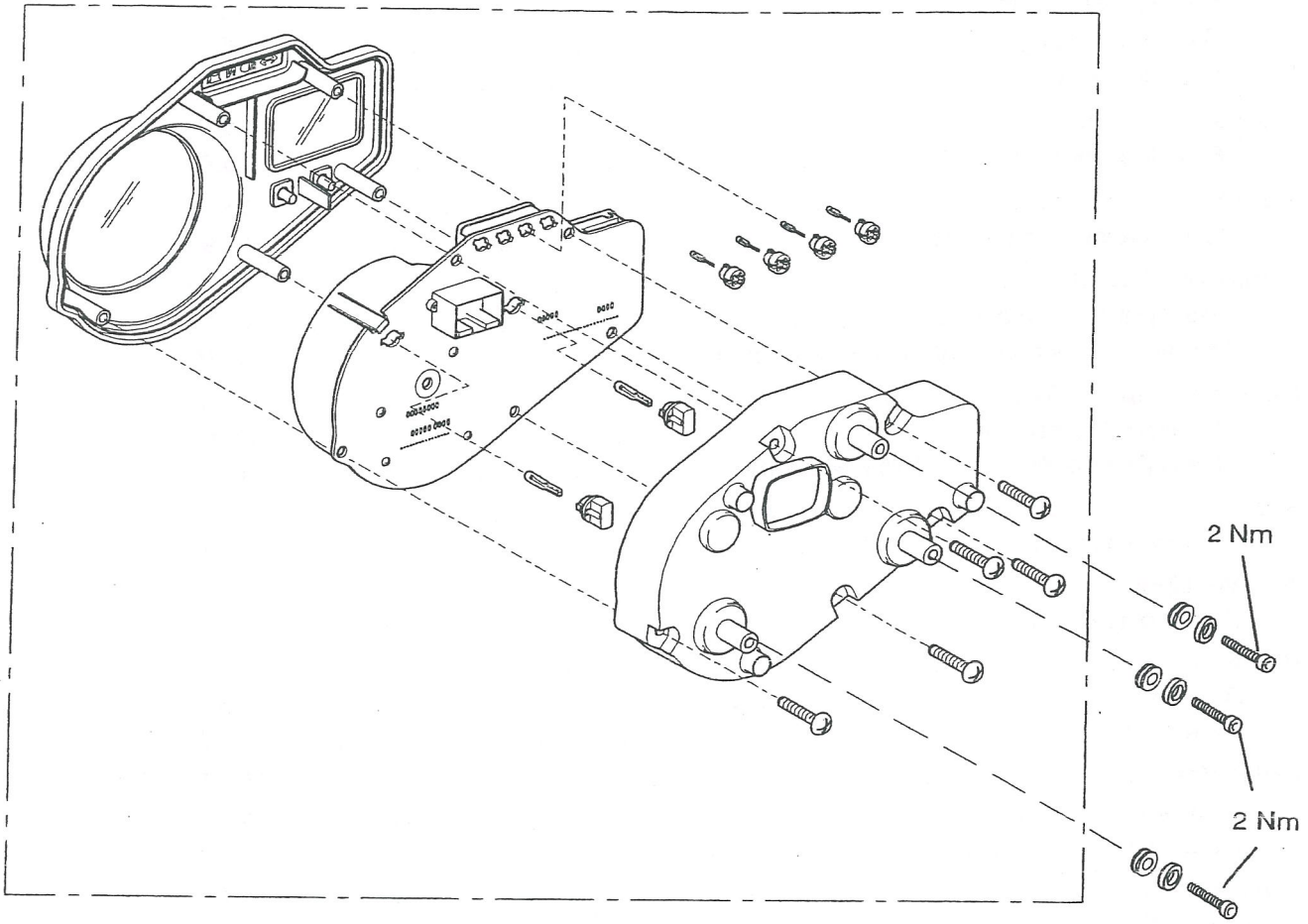

Exploded View - Alternator & Starter

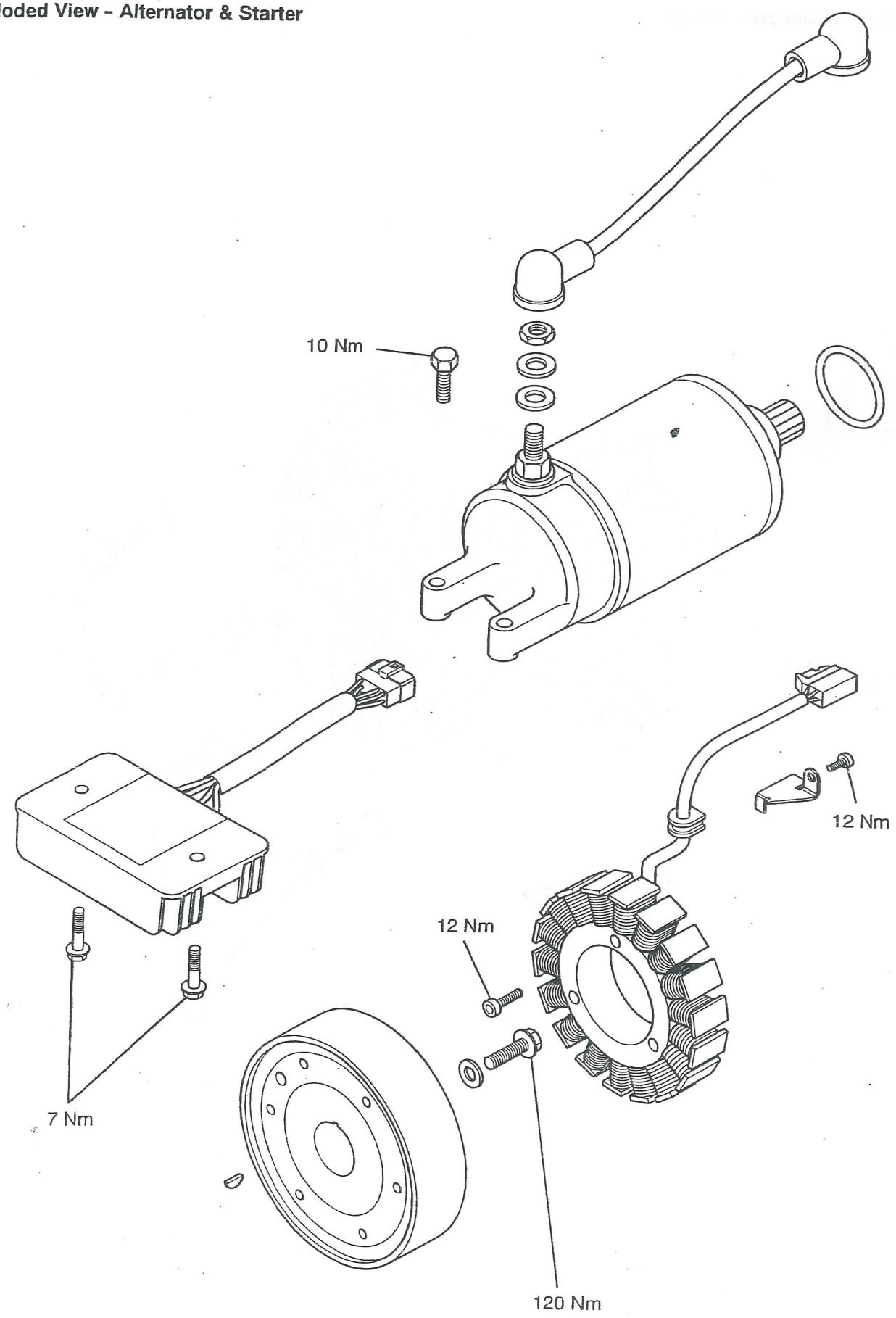

Exploded View - Headlight - TT600

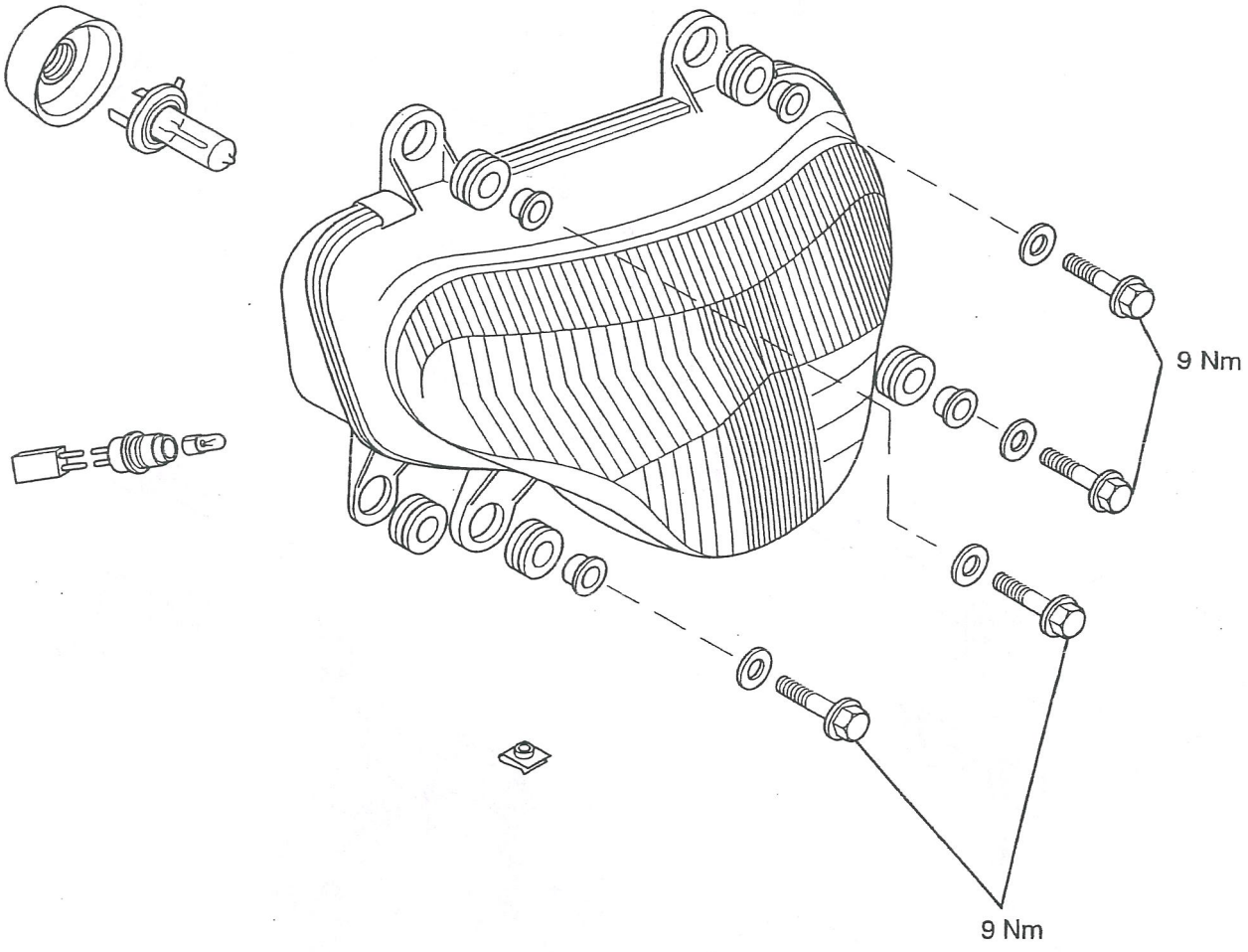

Exploded View - Headlight - Speed Four

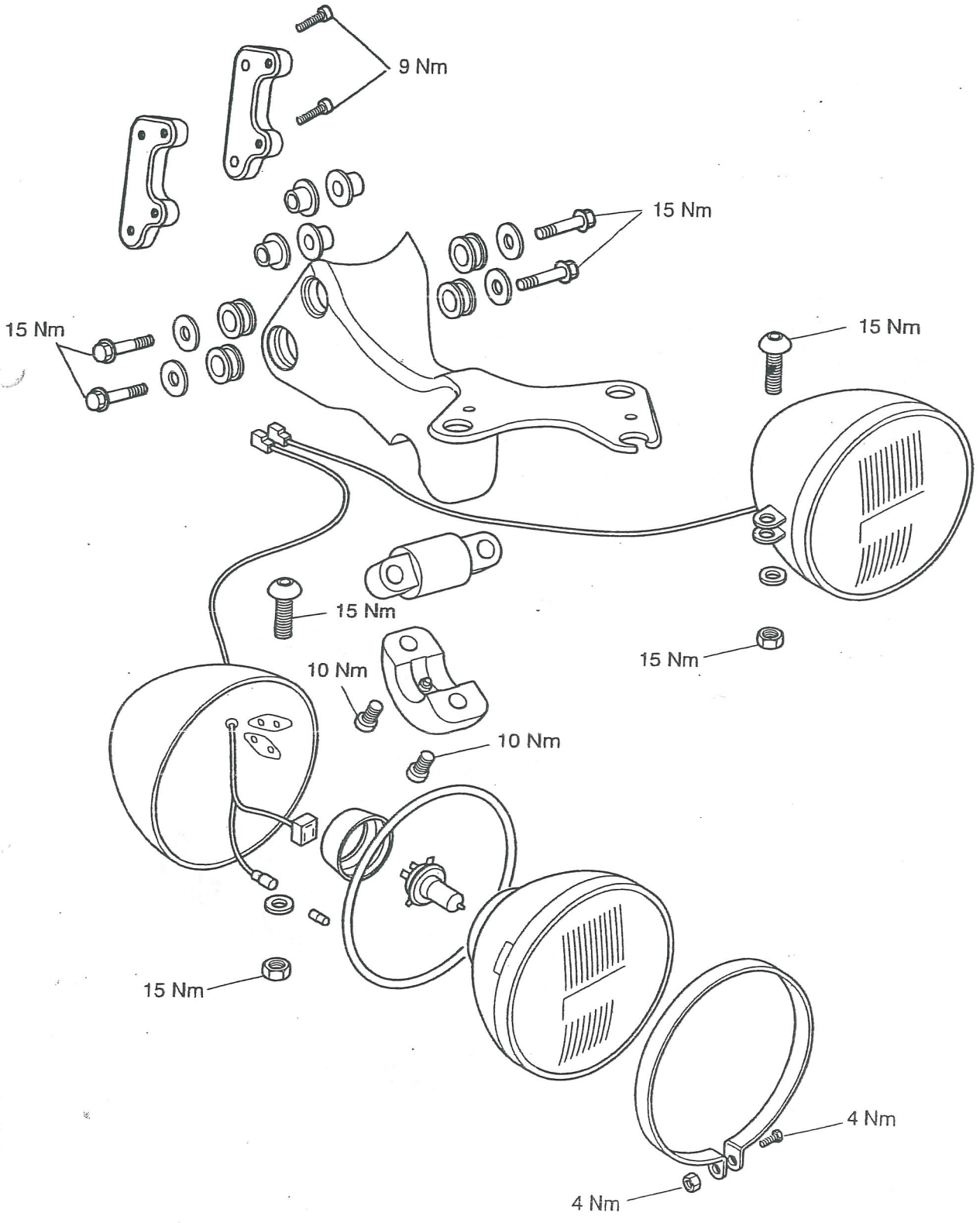

Exploded View - Rear Light and Indicators

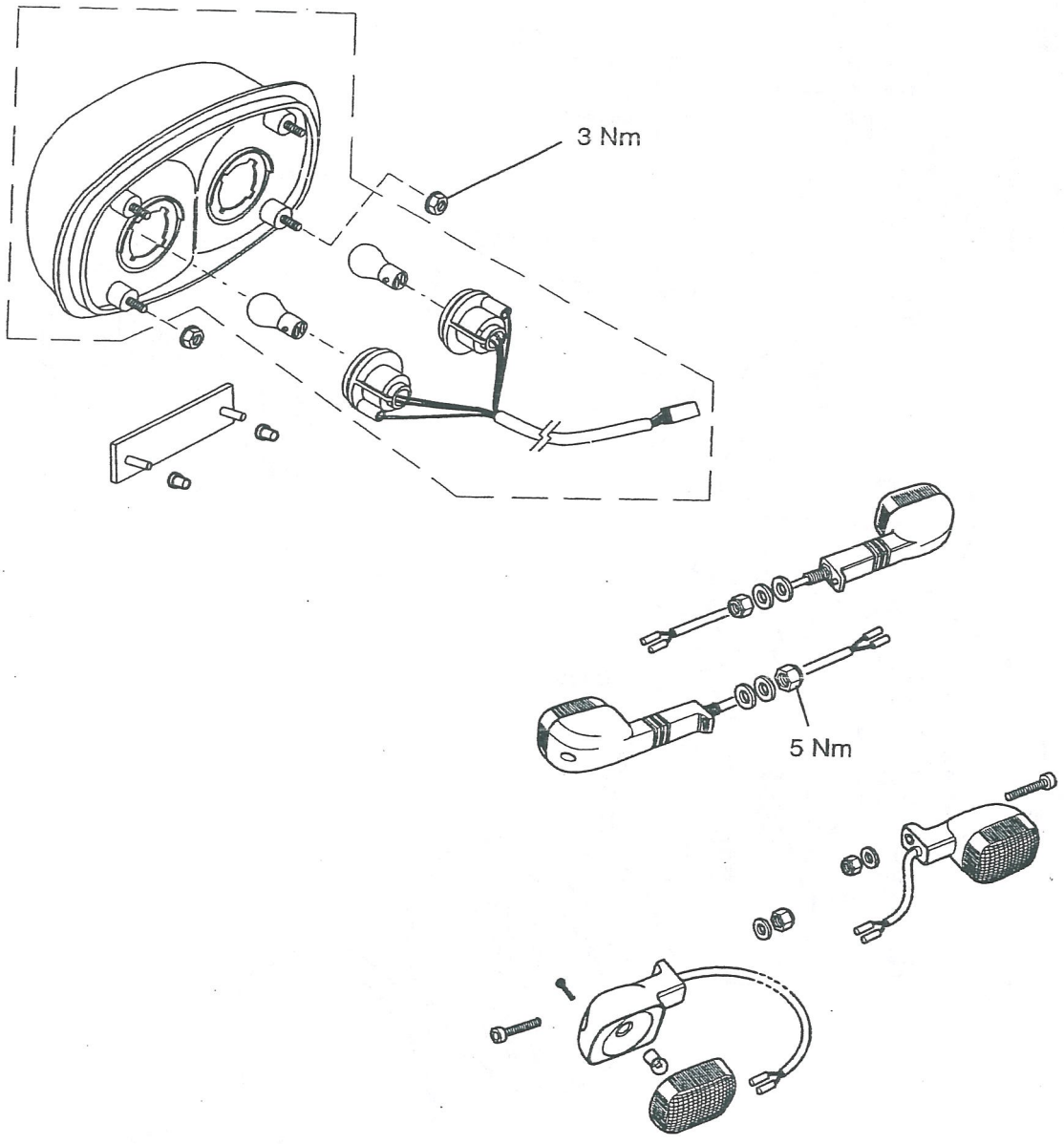

BATTERY

WARNING: The battery gives off explosive gases; keep sparks, flames and cigarettes away. Provide adequate ventilation when charging or using the battery in an enclosed space.

The battery contains sulphuric acid (electrolyte). Contact with skin or eyes may cause severe burns. Wear protective clothing and a face shield.

- **If electrolyte gets on your skin, flush with water immediately.**
- **If electrolyte gets in your eyes, flush with water for at least 15 minutes and SEEK MEDICAL ATTENTION IMMEDIATELY.**

If electrolyte is swallowed, drink large quantities of water and SEEK MEDICAL ATTENTION IMMEDIATELY.

KEEP ELECTROLYTE OUT OF THE REACH OF CHILDREN.

WARNING: The battery contains harmful materials. Always keep children away from the battery whether or not it is fitted to the motorcycle.
Do not jump start the battery, touch the battery cables together or reverse the polarity of the cables as any of these actions may cause a spark which would ignite battery gasses causing a risk of personal injury.

WARNING: The battery electrolyte is corrosive and poisonous. Never swallow battery electrolyte or allow to come into contact with the skin. Always wear eye and skin protection when filling and sealing the battery.

Removal

1. Remove the seat.
2. Disconnect the battery, negative (black) lead first.
3. Remove the battery strap.
4. Take the battery out of the case.

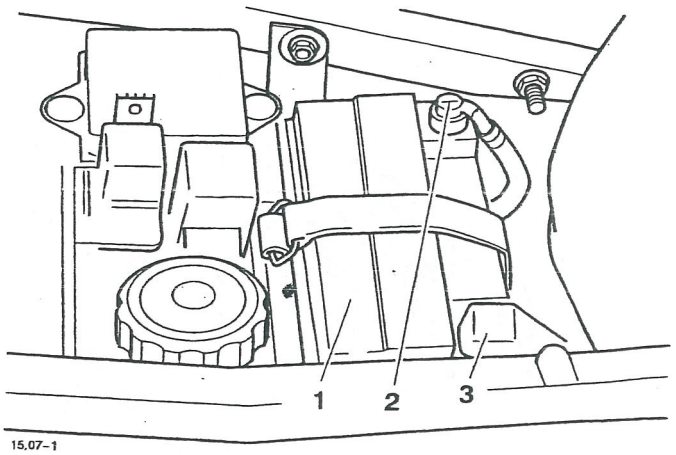

15.07-1

1. Battery

2. Negative lead

3. Positive lead

WARNING: Ensure that the battery terminals do not touch the motorcycle frame as this may cause a short circuit or spark which would ignite battery gases causing a risk of personal injury.

Installation

WARNING: Ensure that the battery terminals do not touch the motorcycle frame as this may cause a short circuit or spark which would ignite battery gases causing a risk of personal injury.

1. Locate the battery to the battery case.
2. Reconnect the battery, positive (red) lead first.
3. Apply a light coat of petroleum jelly to the battery terminals.
4. Cover the positive terminal with the protective cap.
5. Refit the battery strap.
6. Refit the seat.

Exploded View - Rear Light and Indicators

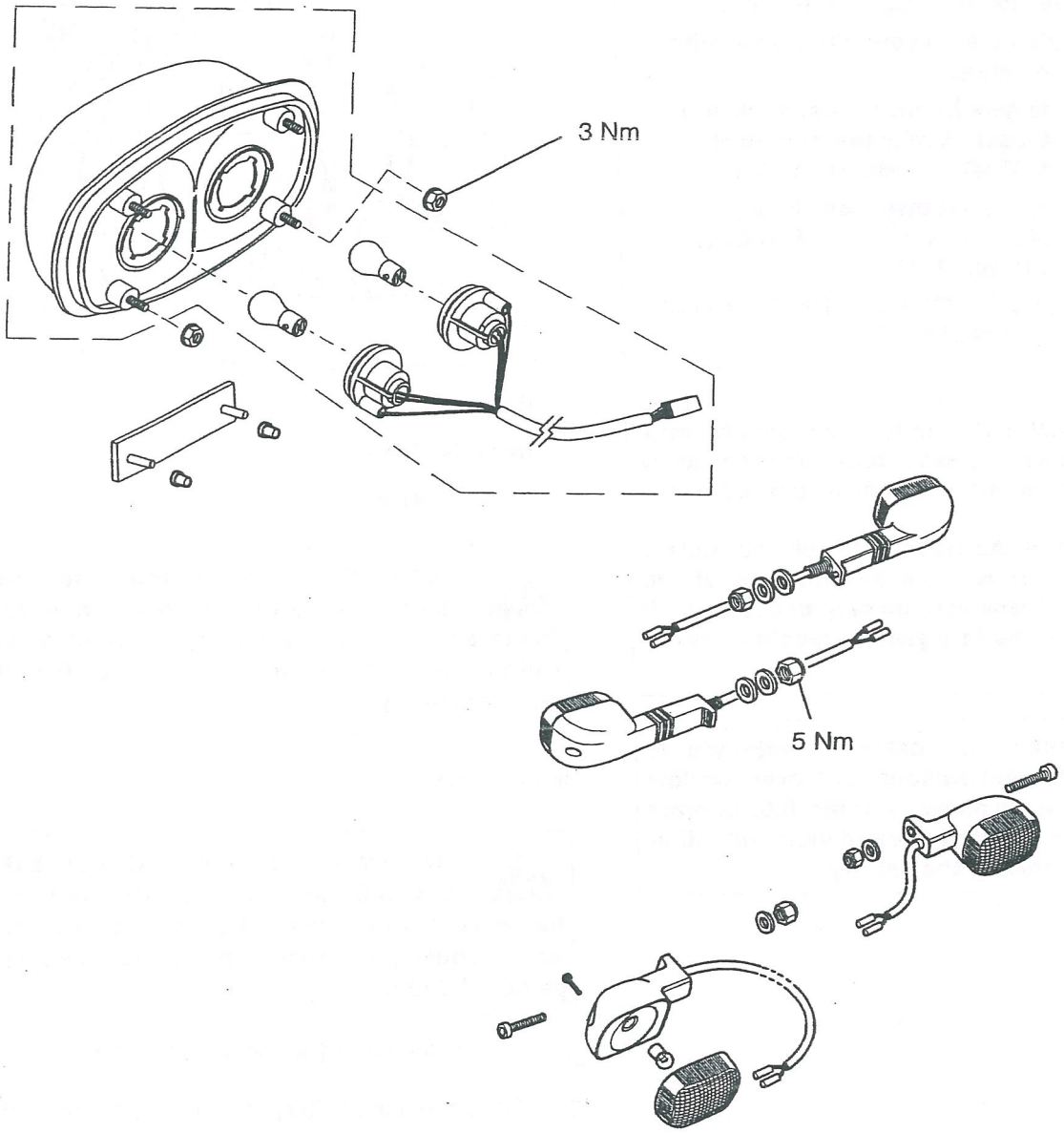

FUSES

Fuses are arranged in the fuse box located, under the seat, adjacent to the relays and battery.

If a fuse fails, inspect the electrical system to determine the cause, and then replace it with a new fuse of correct current rating.

WARNING: Always replace blown fuses with new ones of the correct current rating (as specified on the fuse box cover) and never use a fuse of higher rating.

Fuse Identification

A blown fuse is indicated when all of the systems protected by that fuse circuit become inoperative. When checking for a blown fuse, use the table below to establish which fuse has blown.

NOTE:

- **The fuse identification numbers listed above correspond with those printed on the fuse box cover.**
- **Only 20 and 40 amp. spare fuses are provided in the fuse box. Fuses of other ratings must also be carried on the motorcycle.**

Fuse No	Circuits Protected	Fuse Rating *
1	Ignition switch	20
2	Main	40
3	Alarm	10
4	Horn, indicators, stop lights, instrument memory, diagnostics	10
5	Engine stop switch control (starter, fuel pump, ECM)	10
6	Engine management system	15
7	Cooling fan	15
8	Instrument illumination	5
9	Lighting	15
10	Sidelights	5

* All fuse ratings in this table are given in Amps.

RELAYS

Identification and location

On the TT600 and Speed Four models, the relays and fall detection switch are located beneath the seat, adjacent to the fuse box and battery.

The relays and fall detection switch can be identified from the diagram below.

NOTE:

- **Relays 6 and 7 are fitted to Speed Four models only.**
- **Relay 5 and the fall detection switch were fitted from VIN 161318**

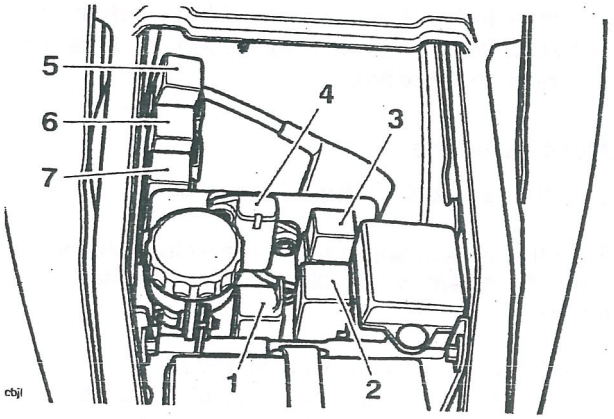

1. **Headlamp cut out relay**
2. **Direction indicator unit**
3. **Main power relay**
4. **Fall detection switch**
5. **Ignition relay**
6. **Main beam relay**
7. **Dip beam relay**

HEADLIGHT - TT600

WARNING: Adjust road speed to suit the visibility and weather conditions in which the motorcycle is being operated.

Ensure that the beam is adjusted to illuminate the road surface sufficiently far ahead without dazzling oncoming traffic. An incorrectly adjusted headlight may impair visibility causing an accident.

WARNING: Never attempt to adjust the headlight beam when the motorcycle is in motion.

Any attempt to adjust the headlight beam when the motorcycle is in motion may result in loss of control and an accident.

Headlight Adjustment

1. Switch the headlight dipped beam on.
2. Turn the vertical adjustment screw clockwise to lower the beam or anti-clockwise to raise the beam.
3. Turn the horizontal adjustment screw anti-clockwise to move the headlight beam to the right, and clockwise to move the beam to the left.

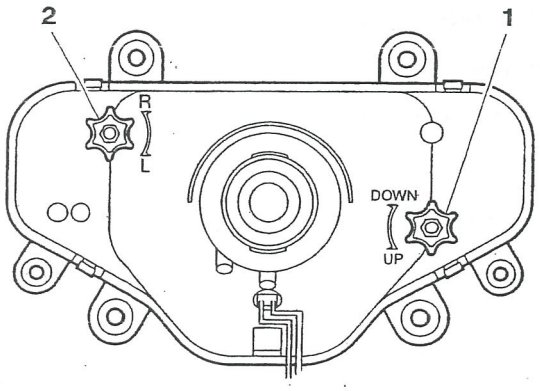

15.10-1

1. Vertical Adjustment Screw
2. Horizontal Adjustment Screw

4. Switch the headlights off when the beams are correctly set.

Headlight/Position Light Bulb Replacement

WARNING: The bulb becomes hot during use. Always allow sufficient time for the bulb to cool before handling.

Avoid touching the glass part of the bulb. If the glass is touched or gets dirty, clean with alcohol before re-use.

WARNING: Do not reconnect the battery until the assembly process has been completed. Premature battery reconnection could result in ignition of the battery gases causing risk of injury.

The complete headlight unit must be removed to gain access for headlight bulb replacement.

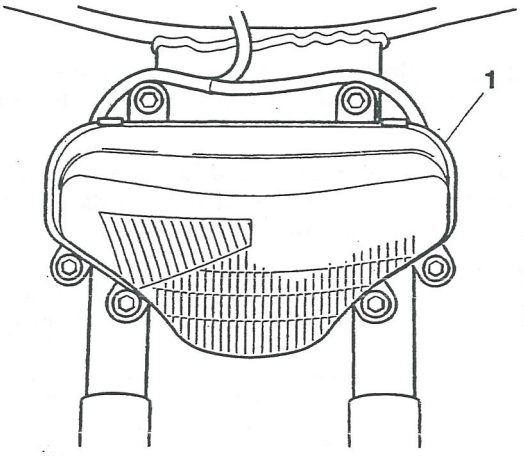

15.10-2

1. Headlight Unit

1. Remove the seat.
2. Disconnect the battery, negative (black) lead first.
3. Remove the cockpit.
4. To remove the position light bulb, disconnect the multi-plug then twist the bulb holder (anti-clockwise as viewed from behind the light) until it is released from the housing. The bulb can then be removed from the holder.
5. To remove the headlight bulb, unscrew the fixings securing the headlight unit to the support bracket and release the unit.

6. Disconnect the multi-pin electrical connector from the headlight bulb and remove the rubber cover.

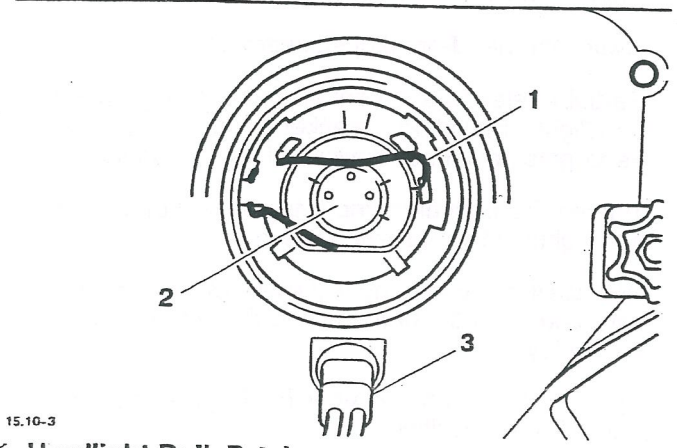

1. Headlight Bulb Retainer
2. Headlight Bulb
3. Position Light

7. Detach the wire bulb retainer from the clip. It is not necessary to undo the screw.

8. Remove the bulb from the headlight.

Installation

1. Installation for both bulbs is the reverse of the removal procedure.

CAUTION: When reconnecting the battery, connect the positive (red) lead first.

HEADLIGHTS - SPEED FOUR

WARNING: Adjust road speed to suit the visibility and weather conditions in which the motorcycle is being operated.

Ensure that the beam is adjusted to illuminate the road surface sufficiently far ahead without dazzling oncoming traffic. An incorrectly adjusted headlight may impair visibility causing an accident.

WARNING: Never attempt to adjust the headlight beam when the motorcycle is in motion.

Any attempt to adjust the headlight beam when the motorcycle is in motion may result in loss of control and an accident.

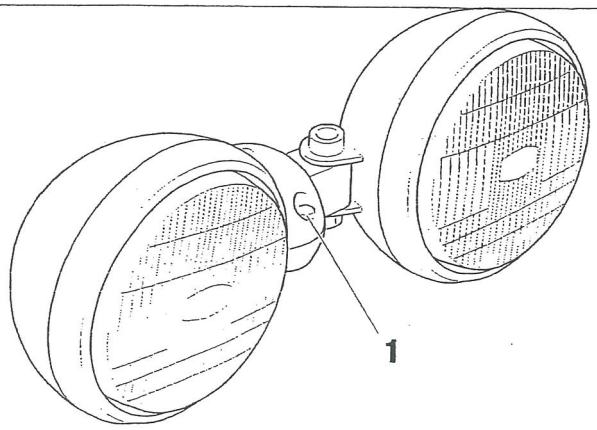

1. Vertical Adjustment Clamp

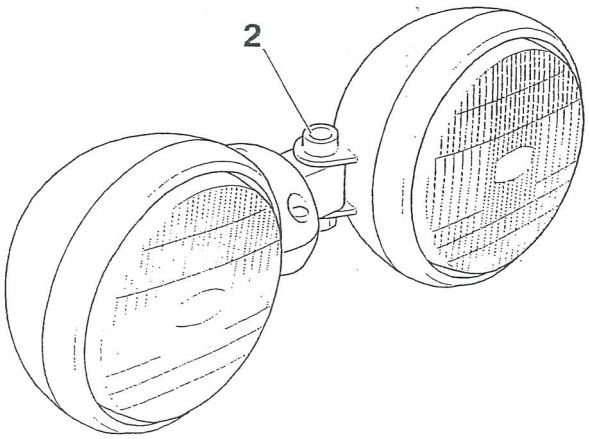

2. Horizontal Adjustment Clamp

Headlight Adjustment

The horizontal beam of each headlight can be adjusted individually. The vertical beams are adjusted as a pair.

1. Switch the headlight dipped beam on.
2. Partially release the central clamp fixing on the headlight mounting bracket and pivot both headlights upward or downward as necessary.
3. Tighten the central clamp fixing while holding the headlights in the desired position.
4. Release the clamp fixing to the rear of the headlight bowl and pivot the headlamp to the left or right as necessary.
5. Tighten the clamp fixing while holding the headlight in the desired position.
6. Repeat for the other headlight.
7. Switch the headlights off when the beam settings are satisfactory.

Headlight Bulb Replacement

WARNING: The bulb becomes hot during use. Always allow sufficient time for the bulb to cool before handling.

Avoid touching the glass part of the bulb. If the glass is touched or gets dirty, clean with alcohol before re-use.

WARNING: Do not reconnect the battery until the assembly process has been completed. Premature battery reconnection could result in ignition of the battery gases causing risk of injury.

Headlight Bulbs

NOTE

Replacement Speed Four headlamp bulbs MUST be purchased from an authorised Triumph dealer who will supply genuine Triumph replacement parts. This is because Speed Four headlamp bulbs are a heavy duty type which are not stocked by or supplied from any other source.

Use of non-genuine Triumph replacement Speed Four headlamp bulbs will lead to reduced bulb service life.

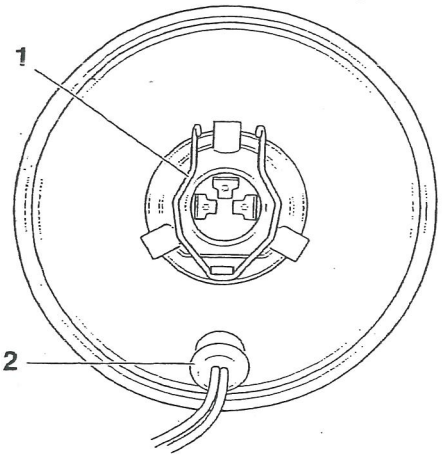

1. Bulb Retainer
2. Position Lamp

1. Disconnect the battery, negative (black) lead first.
2. Release the headlight bezel clamp screw.
3. Support the headlight unit and remove the bezel. Ease the headlight from the headlight bowl.
4. Disconnect the multi-pin electrical connector from the headlight bulb and remove the rubber cover.
5. Unhook the wire retaining clip from behind the bulb.
6. Remove the bulb from the headlight unit.

Installation is the reverse of the removal procedure.

CAUTION: When reconnecting the battery, connect the positive (red) lead first.

Position Lamp Bulb Replacement

Position lamps are fitted to both headlight units. To replace a position light bulb, remove the headlight unit from the headlight bowl to gain access for position light bulb replacement.

REAR LIGHT

Bulb Replacement

1. Remove the seat to gain access to the rear light unit.

2. Rotate the bulb retainer anti-clockwise to release.

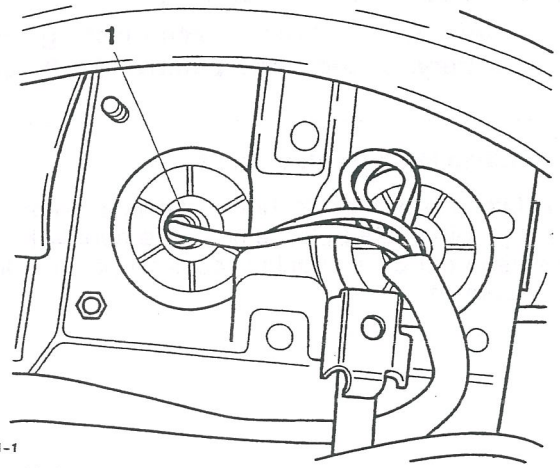

15.11-1

1. Rear light bulb retainer

3. Replace the bulb. Fit the bulb holder to the rear light unit.

4. Refit the seat.

INDICATOR LIGHTS

Bulb Replacement

1. The lens on each indicator is held in place by a securing screw located in the light body.

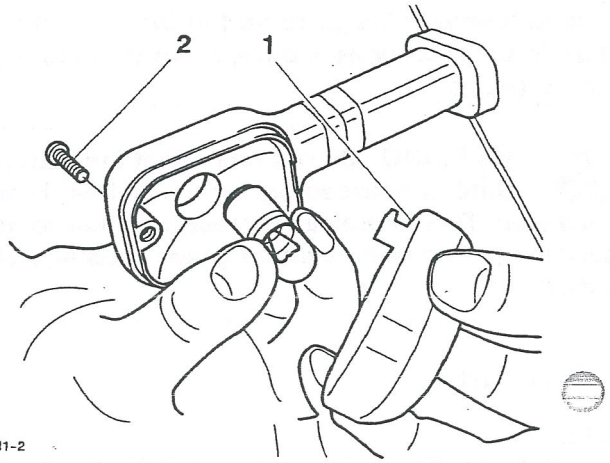

15.11-2

1. Indicator Lens

2. Securing Screw

2. Release the screw and remove the lens to gain access to the bulb.

ALTERNATOR

Removal

1. Remove the left hand lower fairing as described in the body section.

2. Remove the seat and disconnect the battery negative (black) lead first.

3. Disconnect the alternator lead from the engine wiring harness.

4. Release the bolts securing the left hand engine cover to the crankcase.

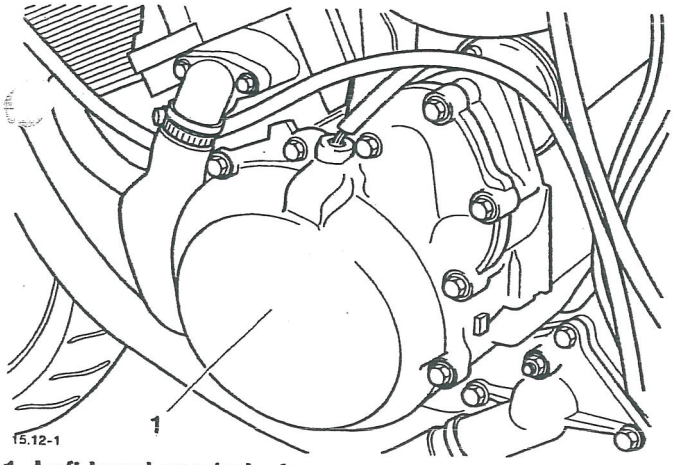

15.12-1

1. Left hand crankshaft cover

5. Withdraw the cover from the crankcase against the pull of the alternator magnet.

6. To remove the stator from the cover, release the three bolts in the centre of the cover and release the bolt securing the cable bracket.

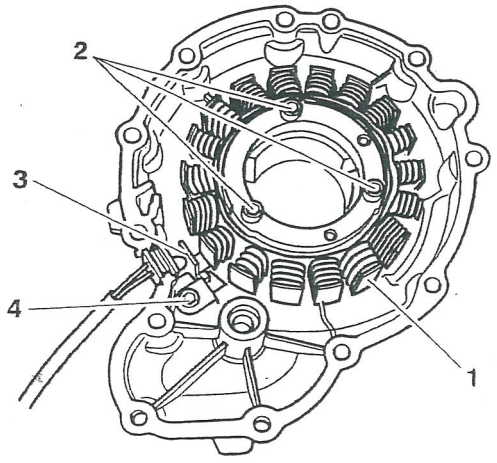

15.12-2

1. Stator

2. Stator bolts

3. Cable bracket

4. Cable bracket bolt

7. Withdraw the stator.

8. To remove the rotor, prevent the crankshaft from rotating using tool T3880375, and remove the centre bolt from the left hand end of the crankshaft.

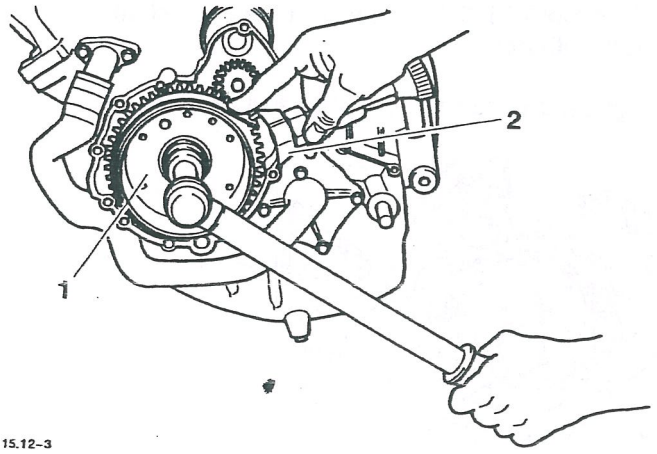

15.12-3

1. Rotor

2. Tool T3880375

9. Assemble tool T3880365 to the threaded centre section of the rotor.

10. Tighten the draw-bolt in the centre of the tool to release the taper seating of the rotor to the crankshaft.

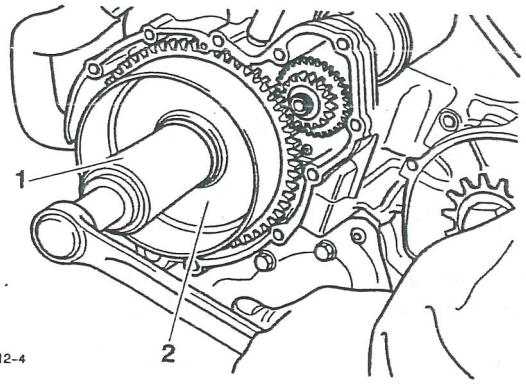

15.12-4

1. Tool T3880365

2. Rotor

11. Withdraw the rotor and tool as an assembly and then separate the tool from the rotor.

Assembly

1. Assemble the rotor to the keyway on the crankshaft.
2. Refit tool T3880375 to prevent the crankshaft from rotating.
3. Tighten the rotor retaining bolt to **120 Nm.**

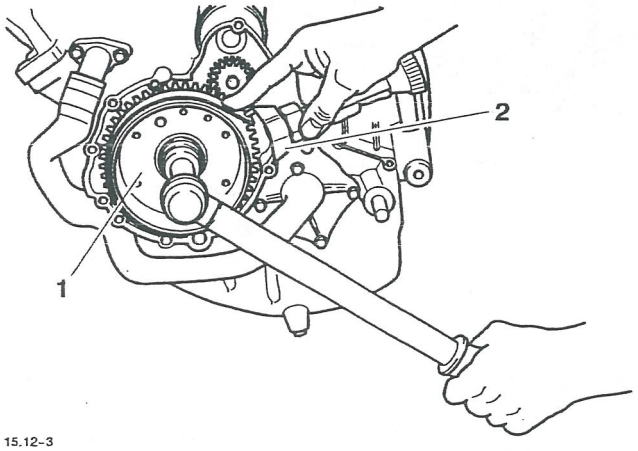

15.12-3

1. Rotor

2. Tool T3880375

4. Remove tool T3880375.
5. Locate the stator to the engine cover.
6. Apply silcone sealer to the cable grommet and align the cable to the exit slot.
7. Fit the cable retainer bracket and tighten the retainer bolt to **12 Nm.**
8. Tighten the stator bolts to **12 Nm.**
9. Refit the left hand engine cover incorporating a new gasket. Tighten the cover fixings to **9 Nm.**
10. Reconnect the battery positive (red) lead first.
11. Refit the seat.

ALTERNATOR RECTIFIER

NOTE:

- **The alternator rectifier is located beneath the rear bodywork on the left hand side of the motorcycle. The rectifier does not contain any serviceable parts and must be replaced if faulty.**

STARTER MOTOR

Removal

1. Remove the left hand lower fairing as described in the body section.
2. Remove the seat and disconnect the battery negative (black) lead first.
3. Remove the fuel tank as described in the fuel system section.
4. Disconnect the starter lead from the starter motor.
5. Release the two bolts securing the starter motor to the crankcase.

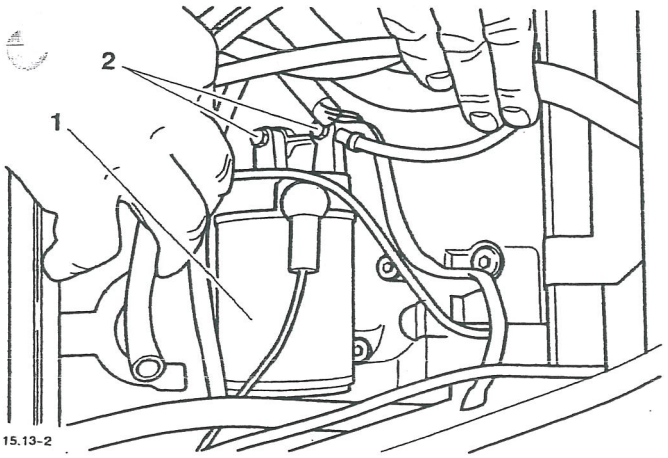

1. Starter motor

2. Starter to crankcase bolts

6. Detach the starter by easing the motor towards the centre of the engine.

Installation

1. Examine the starter O ring and replace if necessary. When fitted, apply a smear of grease to the 'O'-ring to aid assembly.
2. Locate the starter to the engine and engage the starter teeth to the drive gear.
3. Fit and tighten the two starter motor securing bolts ensuring that the earth lead is located under the head of the rearmost bolt. Tighten the fixings to **10 Nm.**

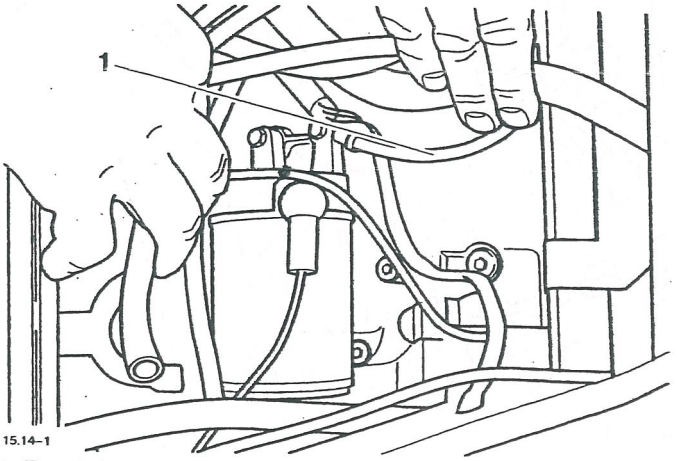

1. Earth lead

4. Reconnect the starter lead.
5. Refit the fuel tank as described in the fuel system section.
6. Refit the left hand lower fairing as described in the body section.
7. Reconnect the battery positive (red) lead first.
8. Refit the seat.

INSTRUMENTS

Removal

1. Remove the seat and disconnect the battery negative (black) lead first.
2. Remove the cockpit as described in the body section.
3. Ease back the rubber gaiter from the instrument connector and disconnect from the instruments.

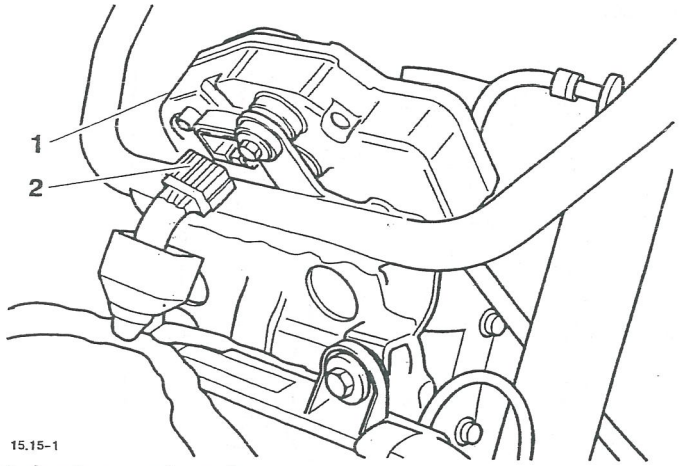

15.15-1

1. Instrument pack

2. Connector retainer

4. Release the three screws securing the instruments to the bracket.

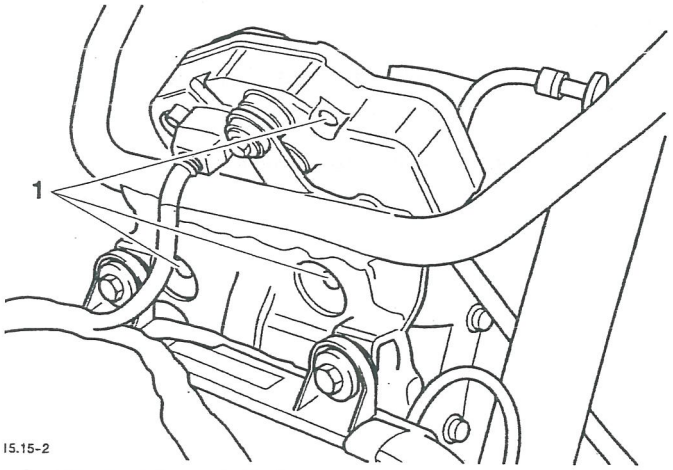

15.15-2

. Instrument pack fixings

IOTE:

Other than bulbs, there are no parts of the instrument pack that can be replaced.

Assembiy

1. Locate the instrument pack to the bracket.
2. Fit and tighten the three retaining screws and tighten to **2 Nm.**
3. Reconnect the electrical multiplug and refit the gaiter.
4. Refit the cockpit as described in the body section.
5. Reconnect the battery positive (red) lead first.
6. Refit the seat.

ROAD SPEED SENSOR

Both models are fitted with electronic road speed sensors which feed information to the digital speedometer.

Removal/assembly

For removal and assembly procedures, refer to the wheel section of this manual.

Test procedure

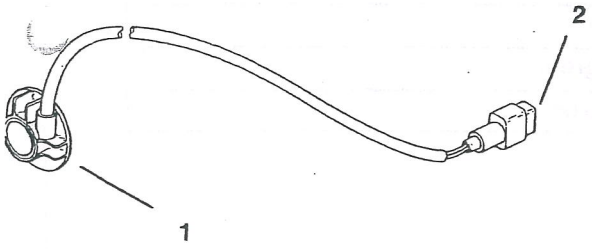

1. Road speed sensor

2. Three-way plug

On the sensor side, the wiring colours are:

Red / Orange - sensor supply

Black / White - sensor ground

Pi signal

The following circuit should be created and used to test the sensor:

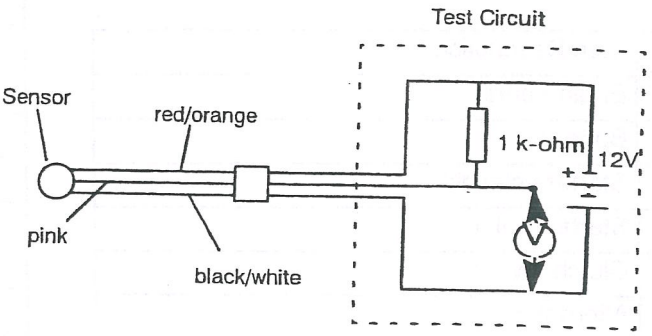

With the test circuit connected, rotate the sensor (or wheel if the sensor remains fitted to the motorcycle) slowly. The voltage should change from 0v to 12v four times per revolution of the sensor/wheel.

A fault in the sensor is indicated if this does not occur.

STARTING AND CHARGING - TT600 TO VIN 161332

Key to circuit diagram

Key	Item Description
1	Engine earth
2	Battery
3	Starter solenoid
4	Starter motor
5	Clutch switch
6	Alternator
7	Main power relay
8	Engine connector
9	Fuses 1, 2, 5, 6 & 7.
10	Rectifier/regulator
11	Instrument pack
12	Ignition switch
13	Engine kill switch
14	Starter button
15	Alarm control unit
16	Headlight cut-out relay

Key to wiring colours

Key	Wiring colour
B	Black
U	Blue
N	Brown
G	Green
S	Slate/grey
O	Orange
K	Pink
R	Red
P	Purple
W	White
Y	Yellow
LG	Light green
LU	Light blue

Circuit diagram - starting and charging - TT600

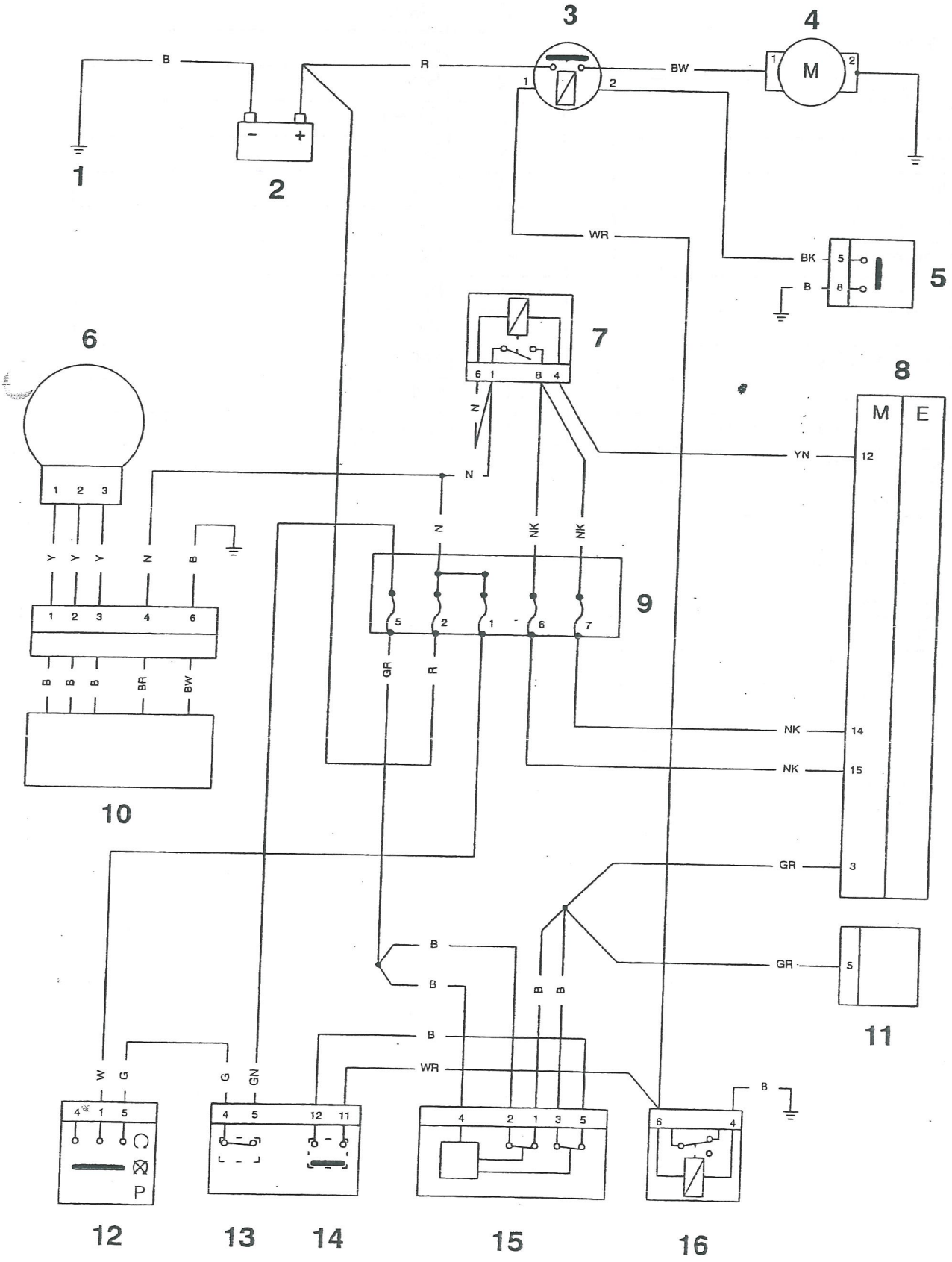

STARTING AND CHARGING - SPEED FOUR and TT600 FROM VIN 161333

Key to circuit diagram

Item number	Description
1	Engine earth
2	Battery
3	Starter solenoid
4	Starter motor
5	Clutch switch
6	Alternator
7	Main power relay
8	Engine connector
9	Alternator rectifier/regulator
10	Fuses 1, 2, 6 and 7
11	Ignition relay
12	Fuse 5
13	Instrument assembly
14	Ignition switch
15	Fall detection switch
16	Engine kill switch
17	Starter button
18	Alarm control unit
19	Headlight cut-out relay

Wire colour codes	
B	Black
U	Blue
N	Brown
G	Green
S	Slate grey
O	Orange
K	Pink
R	Red
P	Purple
W	White
Y	Yellow
LG	Light green
LU	Light blue

Circuit diagram - starting and charging - Speed Four & TT600 from VIN 161333.

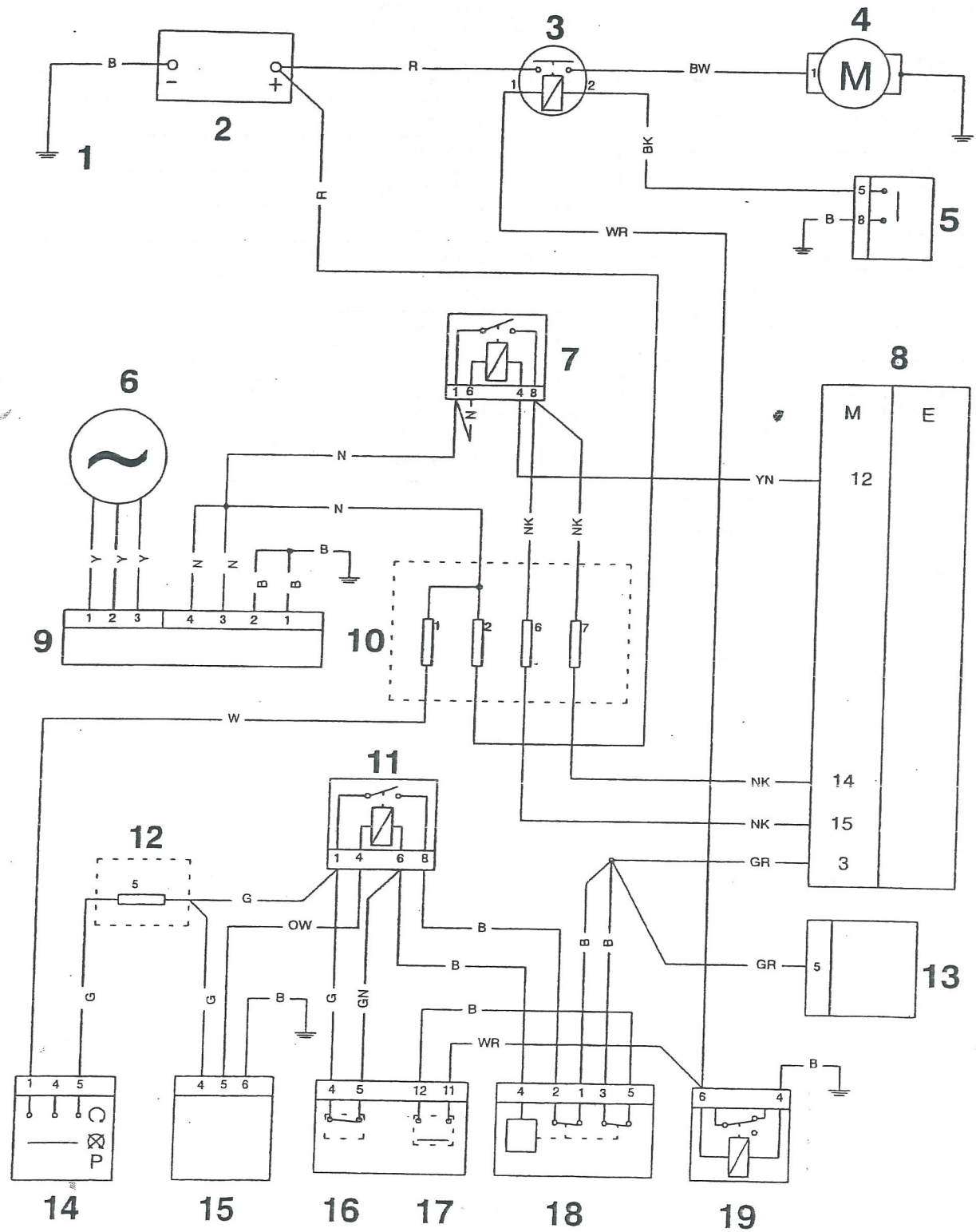

LIGHTING - TT600

Key to circuit diagram

Key	Item Description
1	Fuse 1
2	Ignition switch
3	Fuses 8, 9 & 10
4	Rear light
5	Lighting switch
6	Headlight dip-switch
7	Passing switch
8	Instrument assembly
9	Instrument illumination
10	Main beam warning light
11	Headlight cut-out relay
12	Headlight
13	Position light

Key to wiring colours

Key	Wiring colour
B	Black
U	Blue
N	Brown
G	Green
S	Slate/grey
O	Orange
K	Pink
R	Red
P	Purple
W	White
Y	Yellow
LG	Light green
LU	Light blue

Circuit diagram - lighting - TT600

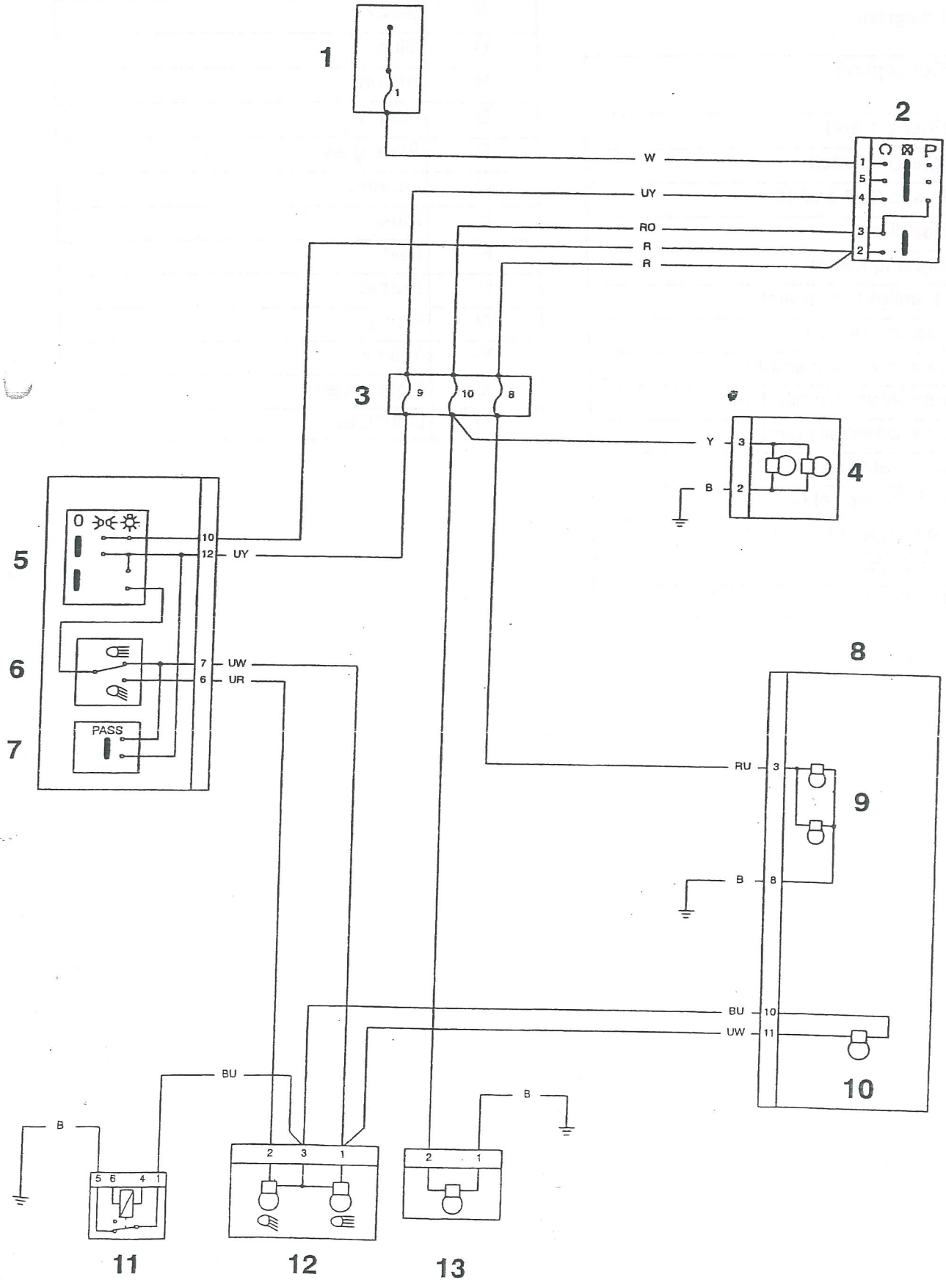

LIGHTING - SPEED FOUR

Key to circuit diagram

Item number	Description
1	Fuses 1 and 3
2	Ignition switch
3	Fuses 8, 9 and 10
4	Rear light
5	Lighting switch
6	Headlight dip switch
7	Passing button
8	Instrument assembly
9	Instrument illumination
10	Main beam warning light
11	Dip beam relay
12	Main beam relay
13	Headlight cut-out relay
14	Headlight 1
15	Headlight 2

Wire colour codes	
B	Black
U	Blue
N	Brown
G	Green
S	Slate grey
O	Orange
K	Pink
R	Red
P	Purple
W	White
Y	Yellow
LG	Light green
LU	Light blue

Circuit diagram - lighting - Speed Four

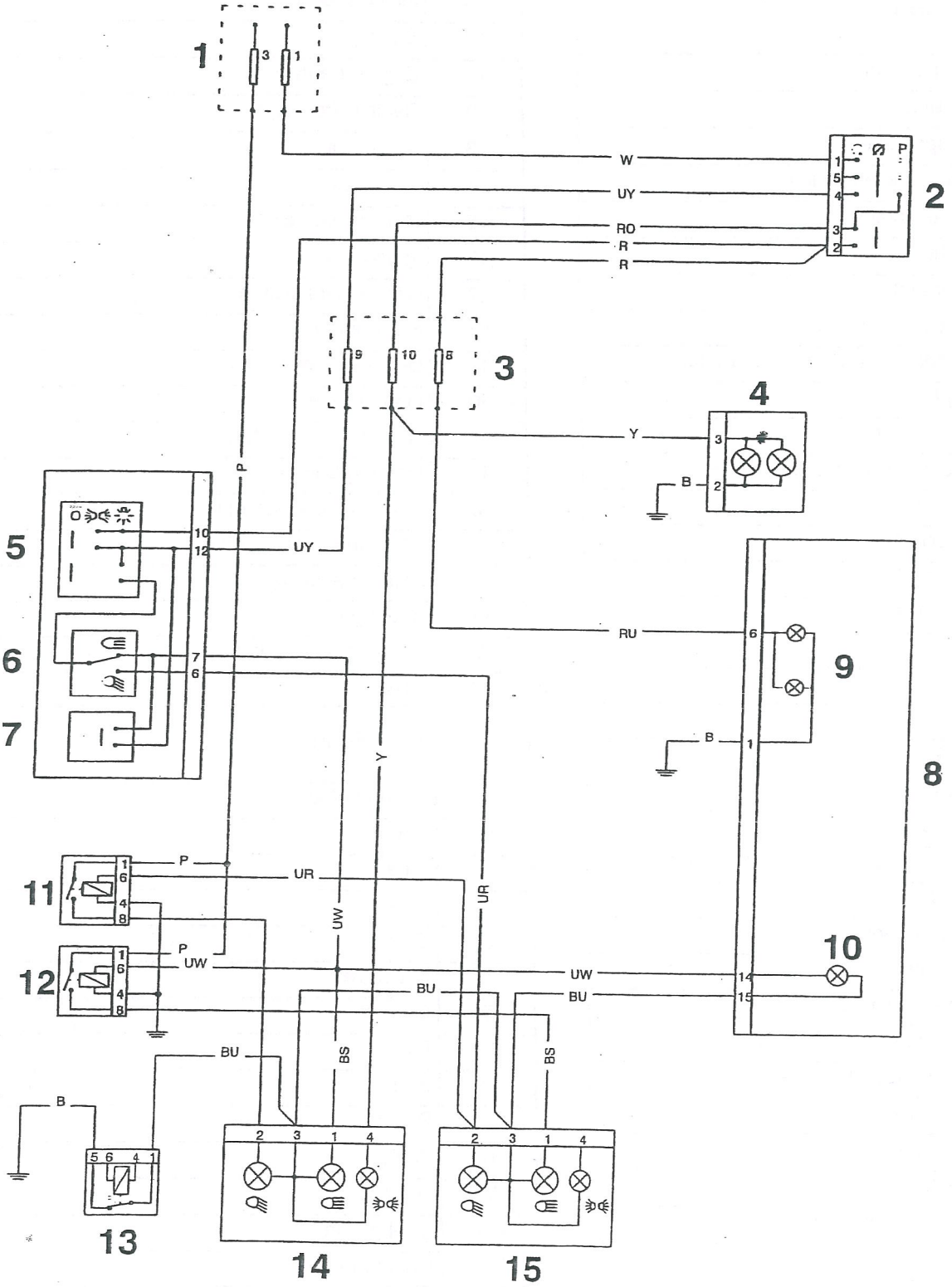

COMPLETE SYSTEM - TT600

Key to circuit diagram

Key	Item Description
1	Instruments
2	Wheel speed sensor
3	Front brake lever switch
4	Engine kill switch
5	Starter button
6	Indicator unit
7	Engine control module
8	Idle air control valve stepper motor
9	Cooling fan
10	Oil pressure switch
11	Evaporative system purge valve
12	Ignition coil 1
13	Ignition coil 2
14	Ignition coil 3
15	Ignition coil 4
16	Injector 1
17	Injector 2
18	Injector 3
19	Injector 4
20	Fuel pump
21	Low fuel level sensor
22	Fuel pump mounting plate connector
23	Sidestand switch
24	Diagnostic connector
25	Neutral switch
26	Crankshaft position sensor
27	Coolant temperature sensor
28	Intake air temperature sensor
29	Throttle position sensor
30	Engine connector
31	Fall detection switch
32	Rear brake pedal switch
33	Right hand rear indicator
34	Rear light
35	Left hand rear indicator
36	Alarm connector
37	Starter motor
38	Starter solenoid
39	Ignition relay
40	Battery
41	Engine earth
42	Rectifier/regulator
43	Alternator
44	Fuse box
45	Main power relay
46	Ignition switch
47	Clutch lever switch
48	Horn button
49	Direction indicator switch
50	Lighting switch
51	Headlight dip switch
52	Passing button
53	Headlight cut-out relay
54	Left hand front indicator
55	Front position light
56	Headlight
57	Right hand front indicator
58	Horn

Key to wiring colours

Key	Wiring colour
B	Black
U	Blue
N	Brown
G	Green
S	Slate/grey
O	Orange
K	Pink
R	Red
P	Purple
W	White
Y	Yellow
LG	Light green
LU	Light blue

COMPLETE SYSTEM - SPEED FOUR

Key to circuit diagram

Number	Description
1	Instruments
2	Wheel speed sensor
3	Horn
4	Front brake switch
5	Engine kill switch
6	Starter button
7	Direction indicator unit
8	ECM
9	Idle air control valve stepper motor
10	Cooling fan
11	Evaporative purge valve (California only)
12	Ignition coil 1
13	Ignition coil 2
14	Ignition coil 3
15	Ignition coil 4
16	Low oil pressure warning light switch
17	Injector 1
18	Injector 2
19	Injector 3
20	Injector 4
21	Fuel pump
22	Low fuel level sensor
23	Fuel pump mounting plate connector
24	Sidestand switch
25	Diagnostic connector
26	Neutral switch
27	Crankshaft position sensor
28	Coolant temperature sensor
29	Intake air temperature sensor
30	Throttle position sensor
31	Engine connector
32	Fall detection switch
33	Rear brake lever switch
34	Right hand rear indicator
35	Rear light
36	Left hand rear indicator
37	Alarm connector

Number	Description
38	Starter motor
39	Starter solenoid
40	Ignition relay
41	Battery
42	Engine earth
43	Alternator rectifier/regulator
44	Alternator
45	Fuse box
46	Main power relay
47	Ignition switch
48	Clutch lever switch
49	Horn button
50	Direction indicator switch
51	Lighting switch
52	Headlight dip switch
53	Passing button
54	Dip beam relay
55	Main beam relay
56	Left hand front indicator
57	Position light 1
58	Headlight 1
59	Position light 2
60	Headlight 2
61	Right hand front indicator
62	Headlight cut out relay

Wire colour codes	
B	Black
U	Blue
N	Brown
G	Green
S	Slate grey
O	Orange
K	Pink
R	Red
P	Purple
W	White
Y	Yellow
LG	Light green
LU	Light blue

ALPHABETICAL INDEX

CONTENTS

Entries beginning:	Page
A	16.2
B	16.2
C	16.2
D	16.3
E	16.3
F	16.3
G	16.4
H	16.4
I	16.4
L	16.4
M	16.4
O	16.4
P	16.4
R	16.4
S	16.5
T	16.5
V	16.5
W	16.5

A

Airbox
Air filter element, 8.78
Remove/refit, 8.77

Alternator
Rectifier, 15.16
Remove/refit, 15.15

B

Battery
Battery charging, 15.8
Battery maintenance, 15.8
Commissioning a new battery, 15.8
Remove/refit, 15.7

Bodywork
Cockpit, 14.14
Exploded views, 14.4
Lower fairing, 14.12
Seat end cap, 14.11
Side panels, 14.10

Brakes
Bleeding, 12.8, 12.16
Exploded views, 12.2
Front brake caliper, 12.10
Front brake pads, 12.9
Front discs, 12.12
Front master cylinder, 12.13
Maintenance safety precautions, 12.6
Rear caliper, 12.20
Rear disc, 12.21
Rear master cylinder, 12.22
Rear pads, 12.17

C

Cam chain
Inspection, 3.9
Tensioner, 3.7

Cam cover, Removal/refit, 3.5

Camshafts
Inspection, 3.11
Remove/refit, 3.10

Circuit diagram
Complete system - Speed Four, 15.30
Complete system - TT600, 15.28
Engine management - Speed Four, 8.16
Engine management - TT600, 8.14
Lighting - Speed Four, 15.26
Lighting - TT600, 15.24
Starting/charging - Speed Four, 15.22
Starting/charging - TT600, 15.20

Clutch
Cable, 4.5
Exploded views, 4.2
Inspection, 4.8
Remove/refit, 4.7

Connecting rods
Inspection, 5.17
Remove/refit, 5.16

Cooling system
Coolant, 9.4
Coolant level inspection, 9.4
Coolant pressure cap, 9.7
Coolant replacement, 9.5
Exploded views, 9.2
Radiator, 9.10
Radiator and fan, 9.7
Radiator hoses, 9.7
Thermostat, 9.13
Water pump, 9.8

Crankcases, strip/assembly, 5.10

Crankshaft
Big end bearings, 5.19
Exploded views, 5.2
Inspection, 5.14
Installation, 5.15
Main bearings, 5.21
Removal, 5.14

Cylinder head
Description, 3.5
Exploded views, 3.2
Inspection, 3.21
Remove/refit, 3.16

Cylinder liners
Inspection, 5.28
Remove/refit, 5.27

D

Diagnostic flow charts
Coolant temperature gauge, 8.67
Coolant temperature sensor, 8.60
Cooling fan, 8.66
Crank sensor, 8.54
Fuel injectors, 8.56
Fuel pump, 8.62
Idle air control, 8.55
Ignition coils, 8.59
Inlet air temperature sensor, 8.61
MIL light, 8.65
Non-electrical, 8.69
Purge valve, 8.58
Sensor voltage, 8.63
System voltage, 8.64
Tachometer, 8.68
Throttle position sensors, 8.57
Drive Chain, 10.6
Chain adjustment, 10.8
Chain slack inspection, 10.7
Chain wear inspection, 10.7
Lubrication, 10.6

E

Electrical connectors
ECM connectors, 8.53
ECM pin numbering, 8.53
General precautions, 8.52
Electrical System, Exploded views, 15.2
Engine
Installation, 5.7
Removal, 5.4
Engine Management System
On-board diagnostics, 8.18
Restarting download, 8.51
System actuators, 8.12
System description, 8.10
Tune download, 8.48
Engine management system
Crank sensor, 8.79
Diagnostic flow charts, 8.54
Fuel pressure regulator, 8.86
Idle control valve, 8.88
Secondary air injection system, 8.95
Setting idle CO levels, 8.89
Throttle Body
Fuel injectors, 8.86
Remove/refit, 8.82
Engine oil
Grade, 7.6
Triumph brand oil, 7.6
Evaporative System
Components, 8.91
Operation, 8.92
Exhaust System, Remove/refit, 8.90

F

Final Drive, Remove/refit, 10.18
Footrests, Inspection, 14.9
Frame
Exploded views, 14.2
Inspection, 14.9
Front Suspension
Description, 11.4
Exploded views, 11.2
Fork inspection, 11.4
Fork oil change, 11.6
Fork oil level chart, 11.8
Fork pull-through, 11.8
Fork removal/refit, 11.4
Fork strip/rebuild, 11.9
Front fork, 11.4
Headstock bearing, 11.13
Fuel
Ethanol, 8.7
M.T.B.E., 8.7
Fuel pump
Fuel filter, 8.74
Low fuel level sensor, 8.75
Pressure checking, 8.73
Remove/refit, 8.72
Fuel System
Exploded views, 8.3
Fuel requirements, 8.7
Glossary of terms, 8.7
Fuel Tank, Fuel Tap, 8.7
Fuel tank
Balancing, 8.84
Remove/refit, 8.70
Fuses
Fuse box, 15.9
Fuse identification, 15.9

G

General Advice
Ball bearings, 1.7
Circlips, 1.7
Cleaning, 1.5
Encapsulated nuts, 1.7
Gaskets, 1.6
Joints and joint faces, 1.6
Liquid gasket, 1.6
Locking devices, 1.7
Lubrication, 1.6
Oil and grease, 1.7
Press, 1.7
Screw threads, 1.6
Self-locking nuts, 1.7
Service data, 1.10
Specifications, 1.10
Split pins, 1.7

H

Headlight
Adjustment - TT600, 15.10
Bulb replacement - Speed Four, 15.13
Bulb replacement - TT600, 15.10
Speed Four, 15.12
TT600, 15.10

Headlight adjustment - Speed Four, 15.12

I

ndicators, Bulb replacement, 15.14

nstruments, Remove/refit, 15.18

L

.ubrication system
Exploded views, 7.2
Heat exchanger, 7.10
Low oil pressure warning light switch, 7.8
Oil & filter change, 7.7
Oil circuit, 7.4
Oil level inspection, 7.7
Oil pump, 7.14
Oil pump inspection, 7.15
Sump, 7.12

M

Maintenance, Service schedule, 2.2

O

On-board diagnostics, 8.18
Checks/adjustments, 8.19
Current data, 8.19
Diagnostic flow chart, 8.24
Diagnostic tool, 8.22
Diagnostic tool operation, 8.29
Diagnostic trouble codes, 8.20
Fault detection system, 8.18
Freeze-frame data, 8.19
Function tests, 8.19
Restarting download, 8.51
Tune download, 8.48

Tune download, 8.48
Restarting download, 8.51

P

Pistons
Inspection, 5.23
Piston rings, 5.24
Remove/refit, 5.23
Ring grooves, 5.24

R

Radiator, Remove/refit, 9.10

Rear Light, Bulb replacement, 15.14

Rear Suspension
Drag link, 10.12
Exploded views, 10.2
Rear suspension unit, 10.9
Swinging arm, 10.14

Relays, Identification, 15.9

Road Speed Sensor, Testing, 15.19

S

Safety
Battery disconnection/reconnection, 1.9
Brakes, 1.4
Chassis repairs, 1.8
Coolant, 1.5
Dangerous substances, 1.3
Electrical, 1.9
Engine oil, 1.3
Environment, 1.4
Flouroelastomers, 1.3
Fuel handling precautions, 1.8
Ignition system, 1.3
Jacking and lifting, 1.5
Replacement parts, 1.10

Seat Remove/refit, 14.10

Service Tools, 1.11

Specifications
Brakes, 1.19
Clutch/primary drive, 1.15
Cooling system, 1.18
Crankshaft, 1.16
Cylinder head, 1.14
Electrical equipment, 1.20
Engine - general, 1.14
Frame, 1.20
Fuel injection system, 1.18
Fuel system, 1.18
Ignition system, 1.18
Lubrication, 1.17
Pistons, 1.16
Suspension, 1.19
Transmission, 1.17
Wheels and tyres, 1.20

Starter Motor, Remove/refit, 15.17

T

Thermostat, Remove/refit, 9.13

Throttle
Cable adjustment, 8.81
Throttle cable, 8.80

Footrests, control plates & engine mountings, 1.24

Torque wrench settings
Bodywork, 1.25
Brakes, 1.24
Clutch, 1.21
Cooling system, 1.22
Crankshaft, 1.21
Cylinder head, 1.21
Electrical, 1.24
Engine covers, 1.21
Final drive, 1.24
Front suspension, 1.23
Fuel system, airbox and exhaust, 1.23
Lubrication system, 1.22
Rear suspension, 1.23
Transmission, 1.22
Wheels, 1.22

Transmission
Exploded views, 6.2
Input and output shafts, 6.11
Selector drum, 6.6
Selector forks, 6.6
Selector inspection, 6.8
Selector shafts, 6.6
Sprag clutch, 6.18

V

Valve clearances, Check/adjust, 3.14

Valves & seals, 3.27

W

Water Pump, Remove/refit, 9.8

Tyres, 13.4
Tread depth, 13.5
Tyre marking, 13.4
Tyre pressure chart, 13.4
Tyre pressures, 13.4
Tyre safety information, 13.6
Tyre wear, 13.5

Wheels
Exploded views, 13.2
Front wheel, 13.7
Rear wheel, 13.9
Wheel inspection, 13.5
Wheel markings, 13.4